用于液压手腕复合安装的S快换

S-System quick coupler for tiltrotators Multi-Layer Mount

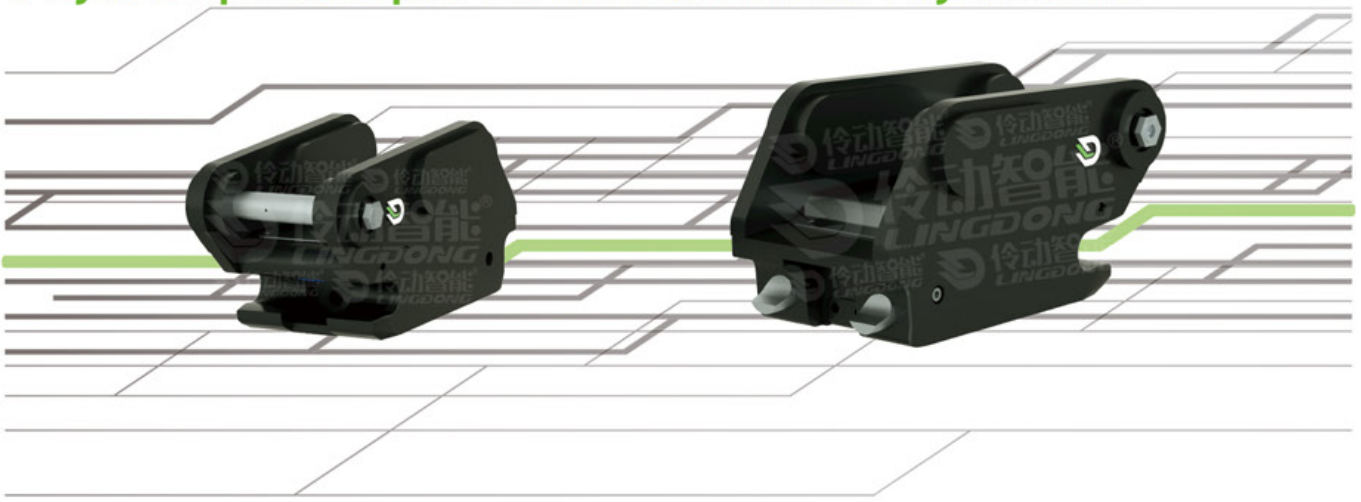

产品特点: Features & Benefits

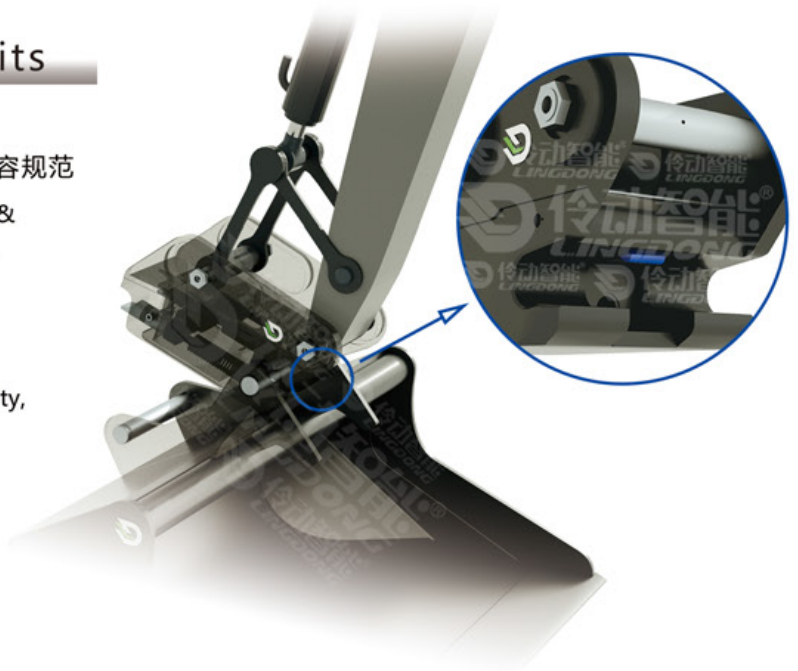

- 符合欧式S接口液压手腕。S规范属具的兼容规范

  Compliant with European S-System tiltrotator & S-System attachment compatibility standards.

- 整体合金铸造，稳定可靠，结构高度紧凑

  Fully cast alloy structure, ensuring high stability, reliability, and a compact design

- 配备后部防坠落安全锁

  Equipped with a rear safety lock to prevent accidental detachment.

型号Model	S30	S40	S45	S50	S60	S70
长度 Length	331mm	425mm	588mm	587mm	682mm	816mm
轴经 Pin Diameter	30mm	40mm	45mm	50mm	60mm	70mm
中心距 Pin Distance	110-215mm	160-270mm	220-365mm	220-365mm	350-410mm	270-485mm
S中心距 S Pin Distance	230mm	300mm	430mm	430mm	480mm	600mm
总高度 Total Height	180mm	228mm	274mm	280mm	344mm	397mm
适配挖机 Compatible Excavator	1-2 ton	2-6ton	5-12ton	5-12ton	12-20ton	18-32ton