佰事瑞帕瓦

Building our world

齿轮泵

Hydraulic Equipment

Hydraulic Pumps & Motors

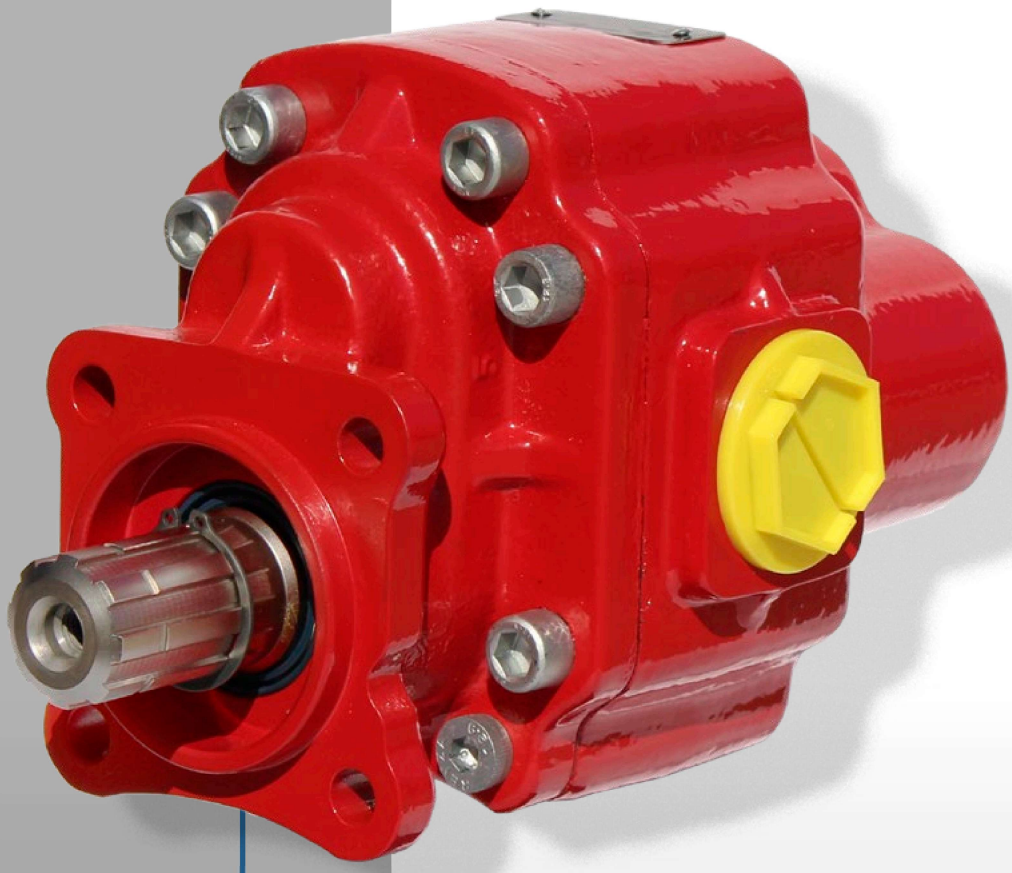

BEXL

HEAVY DUTY

GEAR Pump

BEM.....3
BEMU.....5
BEL.....7
BELH.....9
BELG.....11
BEXL.....13
BEXLNS.....15
CBZ2001.....17
CBZ2004.....19
安装说明.....21
选型说明.....23

BEL

Gear Pump

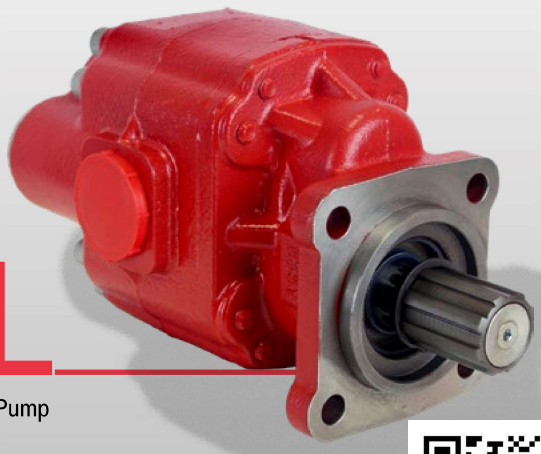





公司介绍

浙江佰事瑞帕瓦传动有限公司是由浙江帕瓦传动设备有限公司（原嘉善顺达汽车配件制造有限公司）与西班牙贝萨雷斯，共同组建的中外合资企业，公司现有员工150多人，拥有各类先进制造设备100多台、自动化静电粉末喷涂线、取力器型式试验中心、液压泵多功能试验台、绞盘拉力试验台等。公司采用中国和西班牙联合开发模式，专心致力于研发制造取力器、液压泵、液压绞盘等应用于车辆及工程机械的产品。

2018年公司被评为国家高新技术企业，公司的技术研发中心根据用户要求及应用场合，不断推出高性能、专业化产品，赢得了用户的信赖；我司是取力器行业标准的主要起草单位，多种取力器、液压泵产品获国家专利。公司注重产品质量管理，先后通过IATF16949、ISO9001、ISO45001等管理体系认证，不断地追求品质完美、服务完善、交货及时，为客户提供优质产品和满意服务。

Company Introduction

Zhejiang Bezares-Power Transmission Co., Ltd,is a Sino foreign joint venture jointly established by Power Transmission (Formerly Jiashan Shunda Auto Parts Manufacturing Co., Ltd.) and Bezares, Spain. The company has more than 150 employees, more than 100 sets of advanced manufacturing equipment, automatic electrostatic powder spraying line, power take-off type test center, hydraulic pump multi-function test stand, winch tension test bed, etc. The company adopts the joint research and development of China and Spain,focusing on the research and manufacture of power take-off, hydraulic pump. hydraullc winch and other products used in vehicles and construction machinery.

In 2018, the company was rated as a national high-techenterprlse. According to the user requirements and application occasions, the company's technology research and development center has continuously launched high-performance and professional products, winning the trust of users.Our company Is the drafting unit of the power take-off Industry standard, and a variety of power take-off and hydraulic pump products have won national patents. The company pay attention to product quality management, has passed IATF16949, ISO9001,ISO45001 and other manage system certification, and constantly pursues perfect quality, perfect service, timely delivery, and provides customers with high-quality products and satisfactory services.



Certificate of Registration

nqa

兹证明

浙江佰事瑞帕瓦传动有限公司

浙江省嘉兴市嘉善县姚庄镇洪福东路 8 号 （2、3、4 厂房）

的质量管理体系适用于

取力器的设计与生产

已经 NQA 根据标准

IATF 16949 : 2016

审核和注册

本注册要求组织必须按照上述标准保持其质量管理体系，并由 NQA 进行监督。
若有任何争议，以英文证书为准

Managing Director

NQA Certificate No: T 83092
IATF Certificate No: 0352208
Date: 26 March 2019
Valid Until: 25 March 2022
Version: 1

Reproduction of the IATF 'globe' logo in any form is strictly prohibited by copyright

NQA is a trading name of NQA Certification Limited, Registration No. 09351758. Registered Office: Warwick House, Houghton Hall Park, Houghton Regis, Dunstable LU5 5ZX.
This certificate is the property of NQA and must be returned on request

Revision Date: Feb 2017

Page 1 of 1

Issue 5

BEM 23/30/40/45

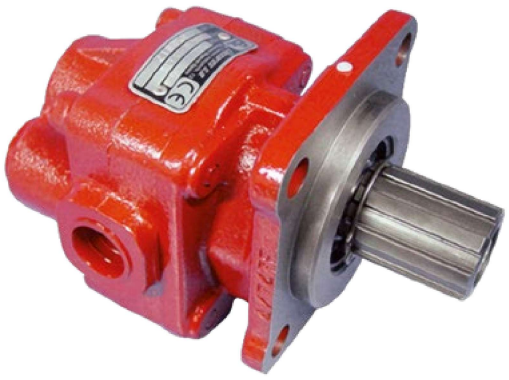

说明 Description

齿轮泵为双向旋转和内部循环。后部和侧边均有进出油口。油口螺纹BSP、NPT、SAE可选。输出轴端无轴承支撑。

Gear pump with reversible rotation direction and internal drainage. Rear and side ports.Oil port thread BSP, NPT and SAE are optional. There is no bearing support at the output shaft end.

主参数 Main Data

泵型号 Pump Type		BEM 23	BEM 30	BEM 40	BEM 45
代码 Part No		5044406	5044506	5044606	5044706
排量（cc/r） Displacement (cm3/rev)		23	29	41	46
最大连续工作压力 Maximum continuous pressure (P1) (bar)		250	240	210	200
最大尖峰压力 Max. peak pressure (P3) (bar)		300	290	260	250
转速 Speed r.p.m	min. (P1)	500			
	máx. (P1)	2000			
尺寸 Dimensiones (mm)	A	129	136	148	161
	B	67	74	79	84
	C	56,8	60,7	68,5	71,8
	D	16,3	16,5	16,9	17,1
重量 Weight (kg)		6,70	7,1	7,8	8,1

旋向Rotation direction		双向Bi-directional
进油压力 Input Pressure	推荐Recommended	0.7÷ 3 bar (abs)
温度 Temperatures		Desde -25°C a +80°C From -25°C to +80°C

推荐液压油 Recommended Oil	Mineral oil based hydraulic fluids to ISO / DIN and fire resistant fluids.

粘度 Viscosity		
	推荐Recommended	De 12 ÷ 100 mm2/s (cST)
	允许Allowed	Max. 750 mm2/s (cST)

BEM 23/30/40/45

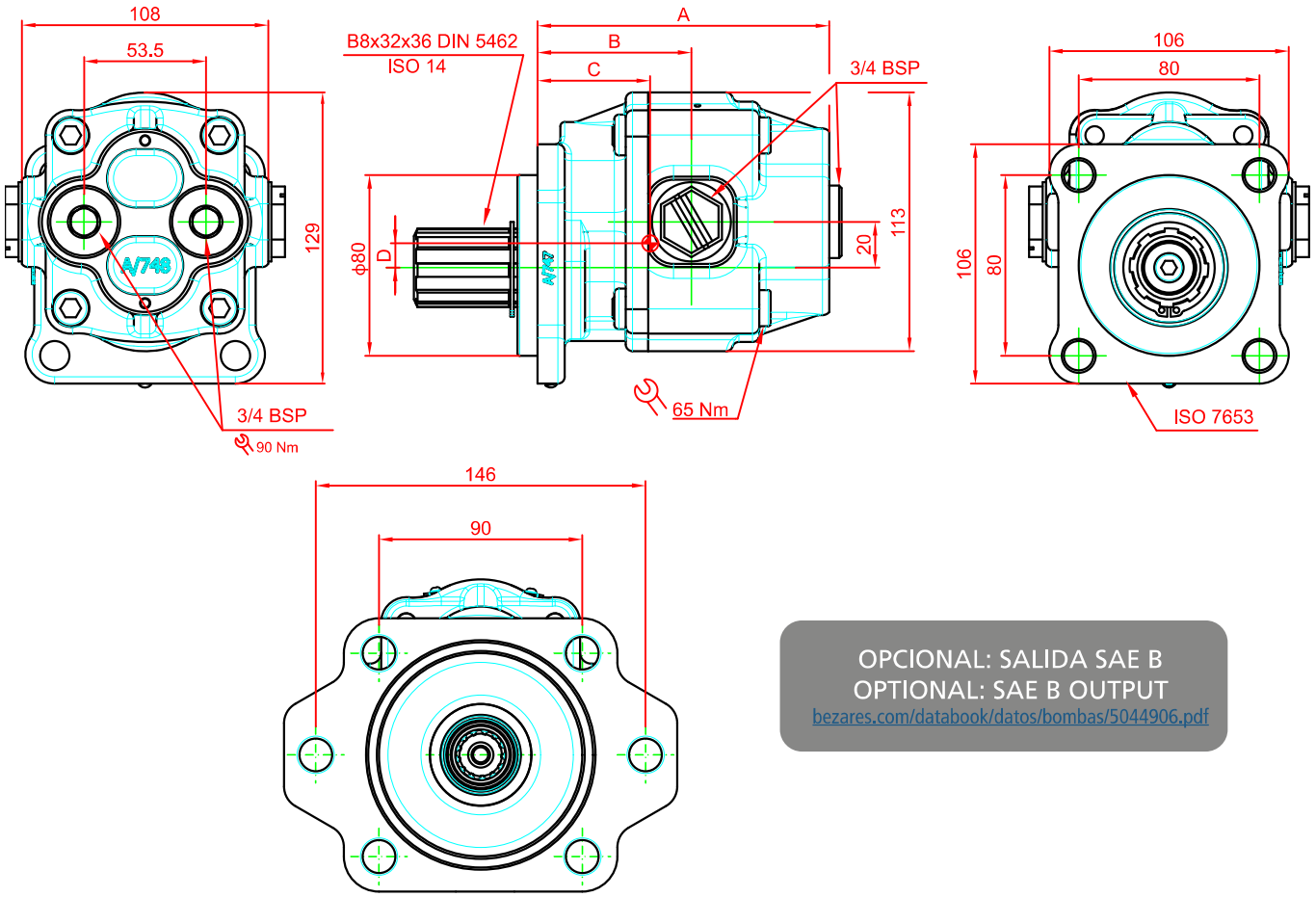

OPCIONAL: SALIDA SAE B
OPTIONAL: SAE B OUTPUT
bezares.com/databook/datos/bombas/5044906.pdf

性能曲线
Performances Curves

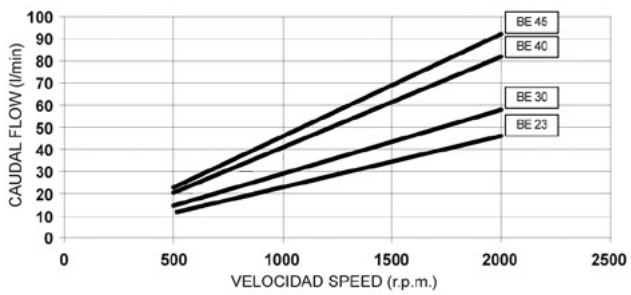

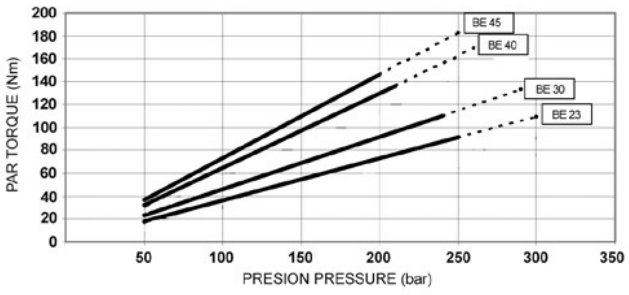

重要: 参考装配说明 Important: Consult fitting Instructions

+86 573 8911 0479 • china@bezares.com

佰事瑞帕瓦

BEMU 23/ 30/ 40/ 45

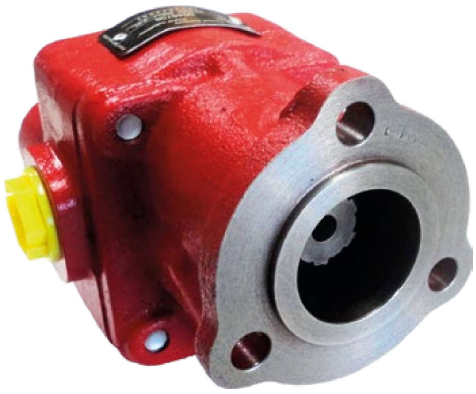

说明 Description

齿轮泵为UNI法兰（3个螺栓），双向旋转和内部循环。后部和侧边均有进出油口。油口螺纹BSP、NPT、SAE可选。输出轴端无轴承支撑。

Gear pump with UNI flange (3 bolts), reversible rotation and internal drainage. Rear and side ports.Oil port thread BSP, NPT and SAE are optional. There is no bearing support at the output shaft end.

主参数 Main Data

泵型号 Pump Type		BEMU 23	BEMU 30	BEMU 40	BEMU 45
代码 Part No		5046706	5046806	5046906	5047006
排量（cc/r） Displacement (cm3/rev)		23	29	41	46
最大连续工作压力 Maximum continuous pressure (P1) (bar)		250	240	210	200
最大尖峰压力 Max. peak pressure (P3) (bar)		300	290	260	250
转速 Speed r.p.m	min. (P1)	500			
	máx. (P1)	2000			
尺寸 Dimensiones (mm)	A	166	170	183	196
	B	102	109	114	119
	C	92	96	104	107.3
	D	17	17.2	17.5	17.7
重量 Weight (kg)		7.1	7.5	8.3	8.5

旋向Rotation direction		双向Bi-directional
进油压力 Input Pressure	推荐Recommended	0.7÷ 3 bar (abs)
温度 Temperatures		Desde -25°C a +80°C From -25°C to 80°C
粘度 Viscosity	推荐Recommended	De 12 a 100 mm2/s (cST)
	允许Allowed	Hasta 750 mm2/s (cST)

BEMU 23/ 30/ 40/ 45

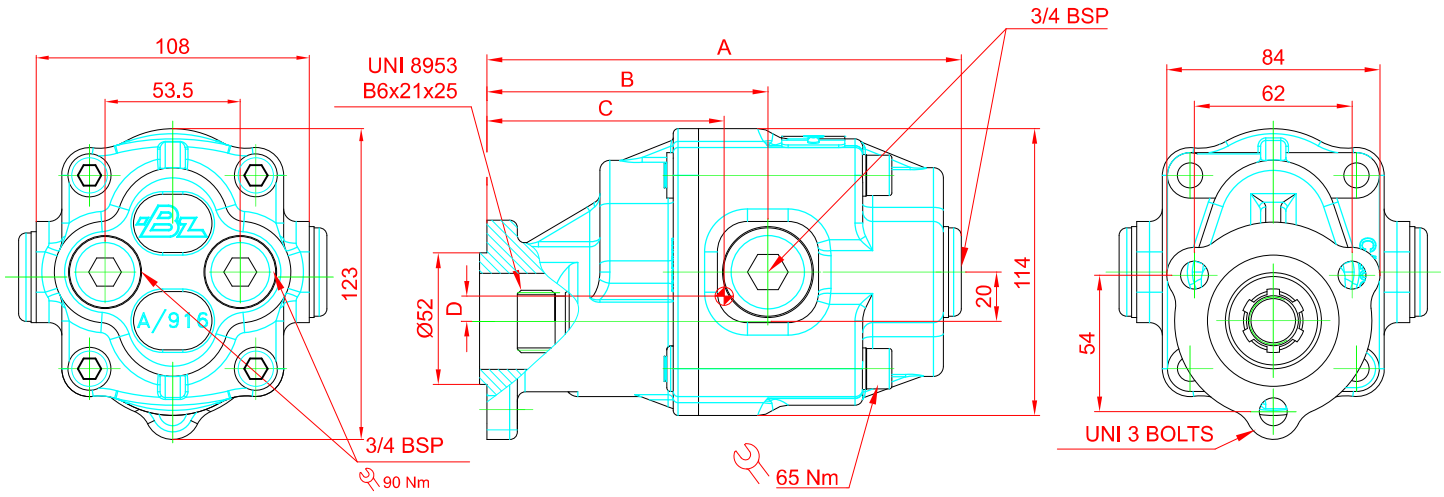

性能曲线
Performance Curves

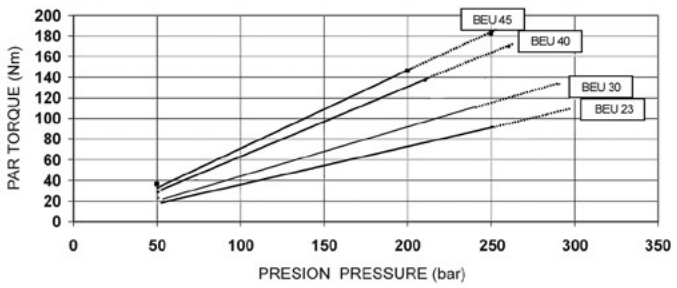

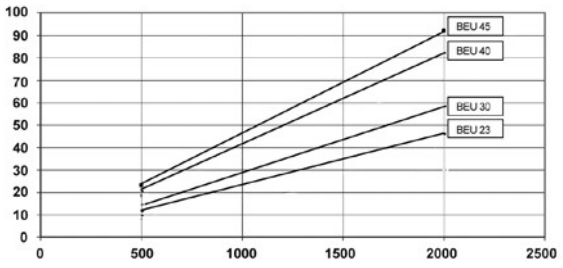

重要: 参考装配说明 Important: Consult fitting Instructions

+86 573 8911 0479 • china@bezares.com

佰事瑞帕瓦

BE L 50/60/80/100/120

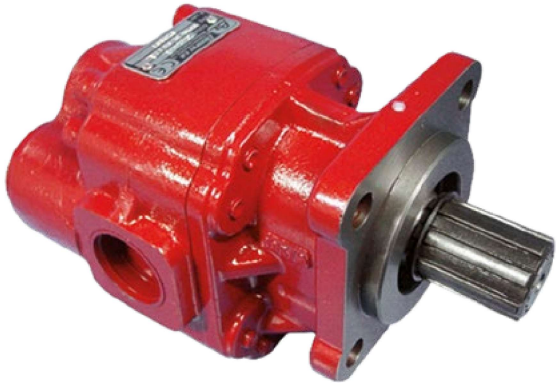

说明 Description

带侧边和后部的高压齿轮泵提供充足的双向安装端口，可用于ISO 4螺栓和SAE 2/4螺栓。连续工作压力高达290bar。油口螺纹BSP、NPT、SAE可选。输出轴端无轴承支撑。

Gear pumps high pressure with side and rearports wich gives ample mounting bi-directional, available for ISO 4 bolts and SAE 2/4 bolts. Working pressures up to 290 bar continuous. Oil port thread BSP, NPT and SAE are optional. There is no bearing support at the output shaft end.

主参数 Main Data

泵型号 Pump Type		BE L 50	BE L 60	BE L 80	BE L 100	BE L 120
代码 Part No		5043606	5043706	5043806	5043906	5044006
排量（cc/r） Displacement (cm3/rev)		50	60	80	100	115
最大连续工作压力 Maximum continuous pressure (P1) (bar)		290	270	230	230	200
最大尖峰压力 Max. peak pressure (P3) (bar)		320	310	270	250	230
转速 Speed r.p.m	min. (P1)			500		
	máx. (P1)	2750	2750	2500	2500	2500
尺寸 Dimensiones (mm)	A(±2)	168	176	189	202	212
	B(±2)	96	104.5	109.5	111	121.5
	C(±1)	83.6	86.7	92.8	99	104
	D(±1)	21.6	21.7	22	22.3	24
	E(±1)			133		140
重量 Weight (kg)		12.6	13.3	14.4	15.6	16.8

旋向Rotation direction		双向Bi-directional
进油压力 Input Pressure	推荐Recommended	0.7÷ 3 bar (abs)
温度 Temperatures		Desde -25°C a +80°C From -25°C to +80°C
推荐液压油 Recommended Oil	Mineral oil based hydraulic fluids to ISO / DIN and fire resistant fluids.	
粘度 Viscosity	推荐Recommended	De 12 ÷ 100 mm2/s (cST)
	允许Allowed	Max. 750 mm2/s (cST)

BE L 50/60/80/100/120

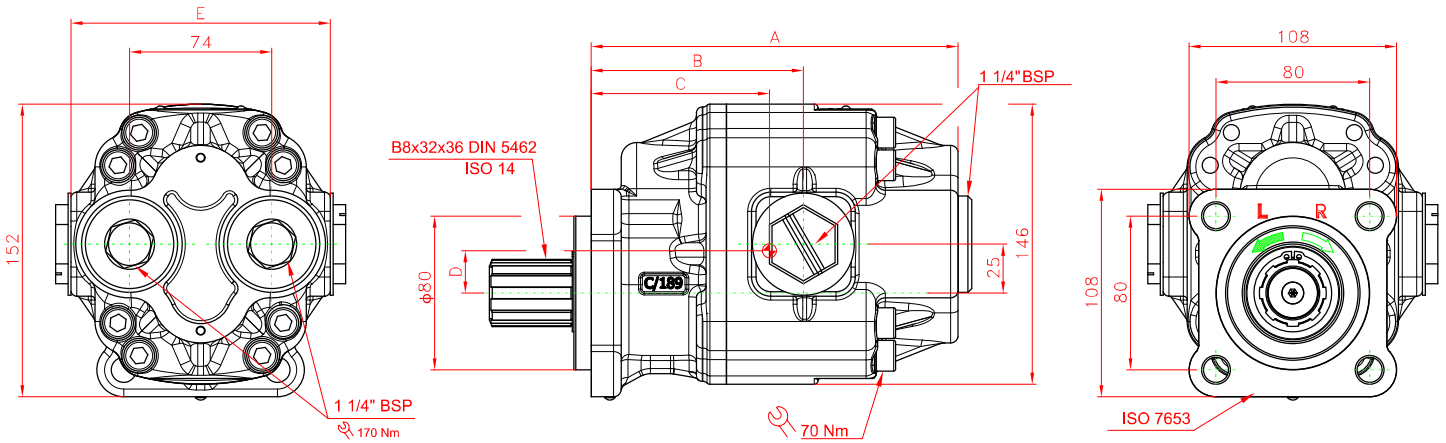

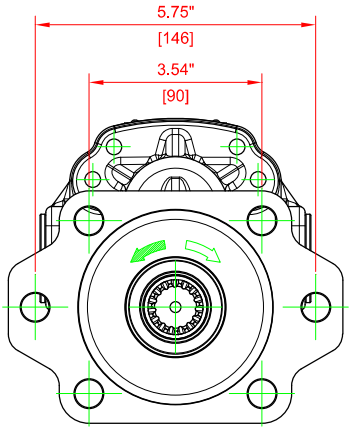

OPCIONAL: SALIDA SAE B
OPTIONAL: SAE B OUTPUT
bezares.com/databook/datos/bombas/5053606.pdf

性能曲线
Performance Curves

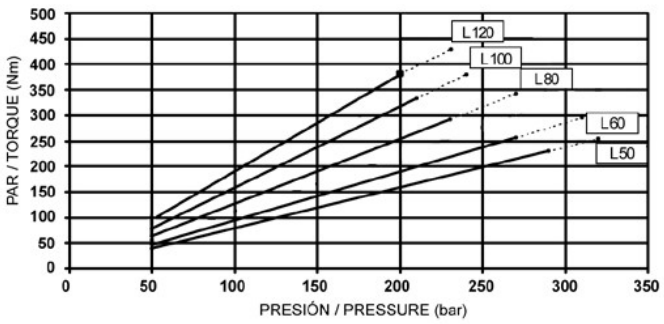

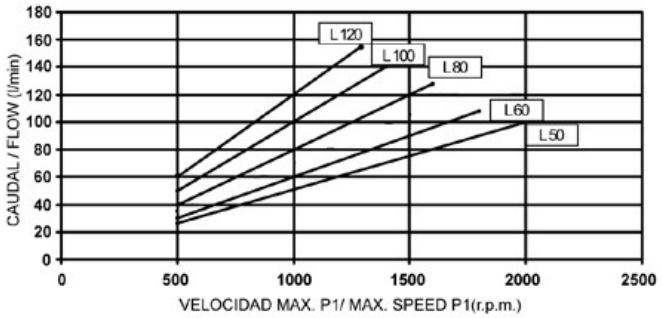

+86 573 8911 0479 • china@bezares.com

佰事瑞帕瓦

BE LH 50/60/80/100/120

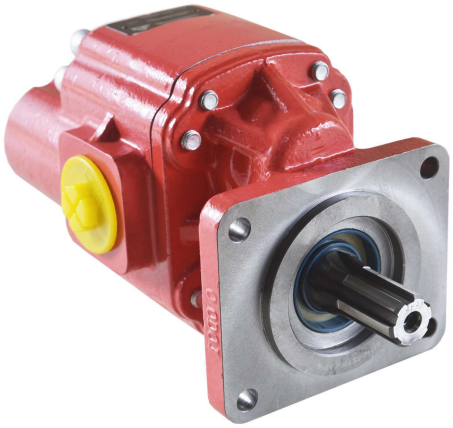

说明 Description

带侧边和后部的高压齿轮泵提供充足的双向安装端口，可用于4螺栓(110X86)。连续工作压力高达290bar。油口螺纹BSP、NPT、SAE可选。输出轴端无轴承支撑。

Gear pumps high pressure with side and rear ports which gives ample mounting bi-directional, available for 4 bolts (110X86). Working pressures up to 290 bar continuous. Oil port thread BSP, NPT and SAE are optional. There is no bearing support at the output shaft end.

主参数 Main Data

泵型号 Pump Type		BE LH 50	BE LH 60	BE LH 80	BE LH 100	BE LH 120
代码 Part No		5045606	5045706	5045806	5045906	5045006
排量（cc/r） Displacement (cm3/rev)		50	60	80	100	115
最大连续工作压力 Maximum continuous pressure (P1) (bar)		290	270	230	230	200
最大尖峰压力 Max. peak pressure (P3) (bar)		320	310	270	250	230
转速 Speed r.p.m	min. (P1)			500		
	máx. (P1)	2750	2750	2500	2500	2500
尺寸 Dimensiones (mm)	A(±2)	168	176	189	202	212
	B(±2)	96	104.5	109.5	111	121.5
	C(±1)	83.6	86.7	92.8	99	104
	D(±1)	21.6	21.7	22	22.3	24
	E(±1)		133			140
重量 Weight (kg)		12.6	13.3	14.4	15.6	16.8

旋向Rotation direction		双向Bi-directional
进油压力 Input Pressure	推荐Recommended	0.7÷ 3 bar (abs)
温度 Temperatures		Desde -25°C a +80°C From -25°C to +80°C
推荐液压油 Recommended Oil	Mineral oil based hydraulic fluids to ISO / DIN and fire resistant fluids.	
粘度 Viscosity	推荐Recommended	De 12 ÷ 100 mm2/s (cST)
	允许Allowed	Max. 750 mm2/s (cST)

BE LH 50/60/80/100/120

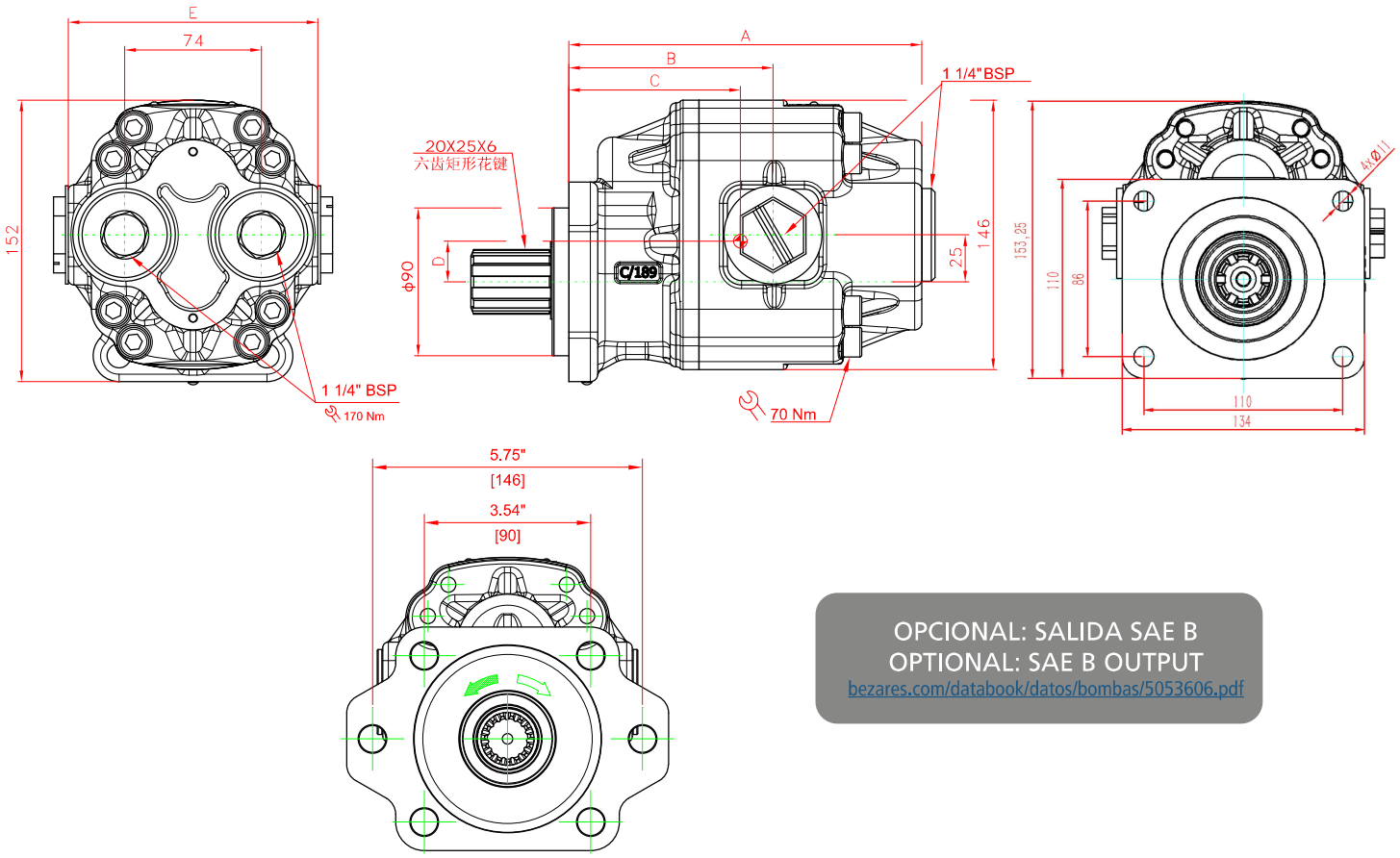

OPCIONAL: SALIDA SAE B
OPTIONAL: SAE B OUTPUT
bezares.com/databook/datos/bombas/5053606.pdf

性能曲线
Performance Curves

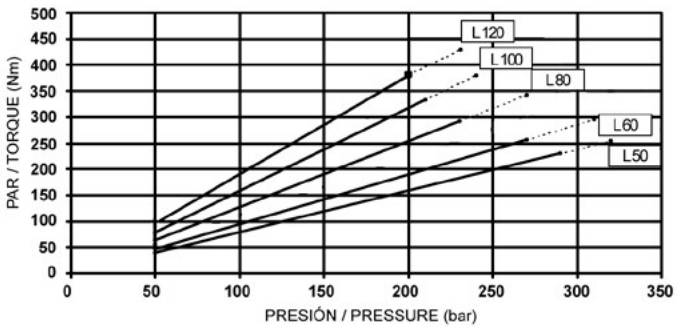

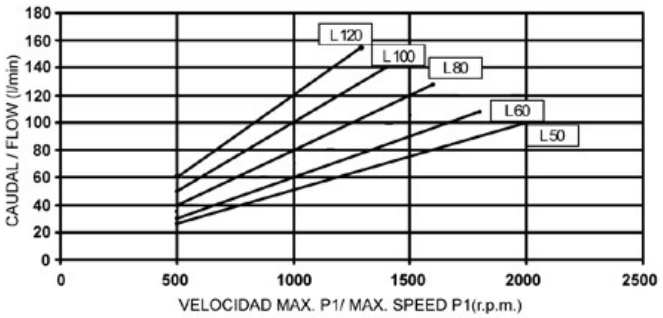

+86 573 8911 0479 • china@bezares.com

佰事瑞帕瓦

BE LG 60/80/100

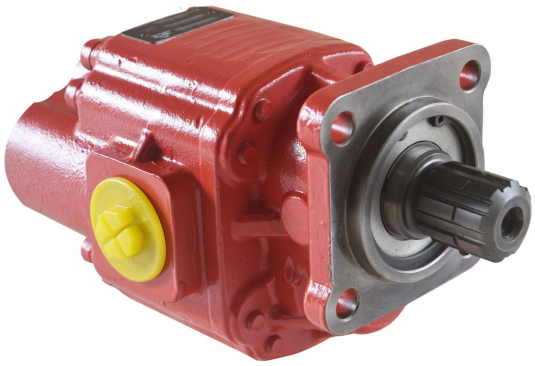

说明 Description

带侧边和后部的高压齿轮泵提供充足的双向安装端口。输出轴端带轴承支撑。可承受径向和较小轴向载荷应用(若需承受较大径向及轴向载荷需选择BELGS型)。油口螺纹BSP、NPT、SAE可选。

Gear pumps high pressure with side and rear ports which gives ample mounting bi-directional. The output shaft end is supported by bearing. It can withstand radial load and small axial load application(BELGS type is required for large radial and axial loads). Oil port thread BSP, NPT and SAE are optional.

主参数 Main Data

泵型号 Pump Type		BE LG 60	BE LG 80	BE LG 100
代码 Part No		5047706	5047806	5047906
排量（cc/r） Displacement (cm3/rev)		60	80	100
最大连续工作压力 Maximum continuous pressure (P1) (bar)		270	230	230
最大尖峰压力 Max. peak pressure (P3) (bar)		310	270	250
转速 Speed r.p.m	min. (P1)		500	
	máx. (P1)	2750	2500	2500
尺寸 Dimensiones (mm)	A(±2)	176	189	202
	B(±2)	104.5	109.5	111
	C(±1)	86.7	92.8	99
	D(±1)	21.7	22	22.3
	E(±1)		133	
重量 Weight (kg)		13.3	14.4	15.6

旋向Rotation direction		双向Bi-directional
进油压力 Input Pressure	推荐Recommended	0.7÷ 3 bar (abs)
温度 Temperatures		Desde -25°C a +80°C From -25°C to +80°C
推荐液压油 Recommended Oil		Mineral oil based hydraulic fluids to ISO / DIN and fire resistant fluids.
粘度 Viscosity	推荐Recommended	De 12 ÷ 100 mm2/s (cST)
	允许Allowed	Max. 750 mm2/s (cST)

BE LG 60/80/100

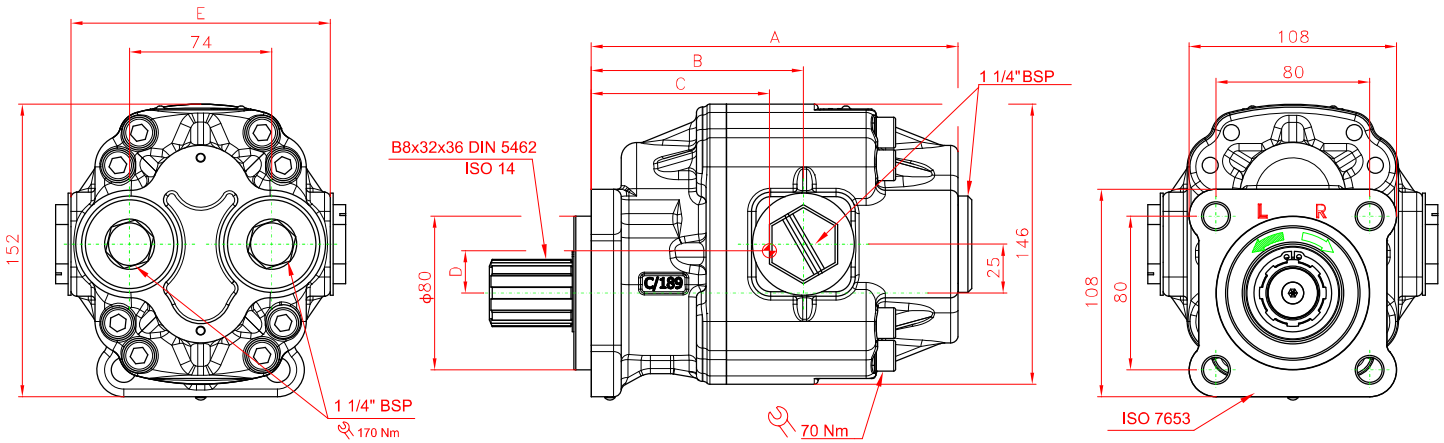

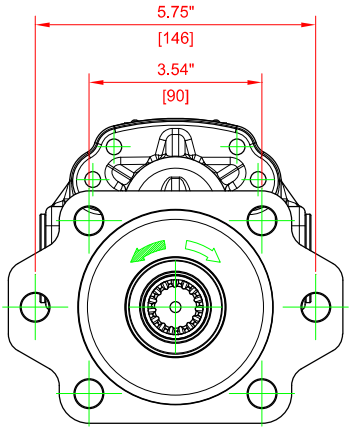

OPCIONAL: SALIDA SAE B
OPTIONAL: SAE B OUTPUT
bezares.com/databook/datos/bombas/5053606.pdf

性能曲线
Performance Curves

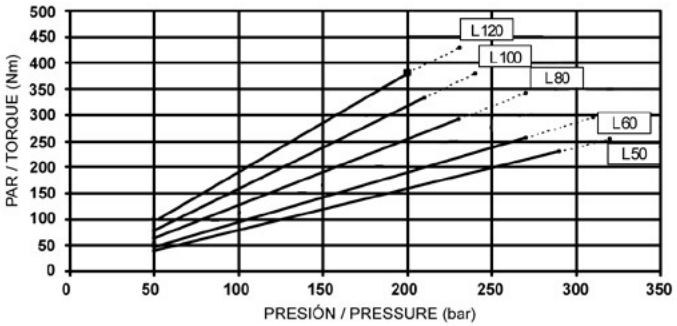

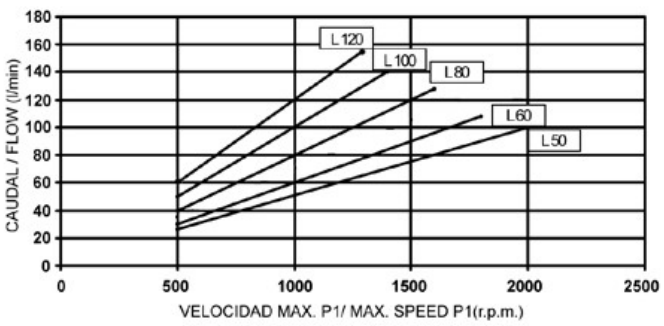

+86 573 8911 0479 • china@bezares.com

佰事瑞帕瓦

BE XL 85/115/130/150

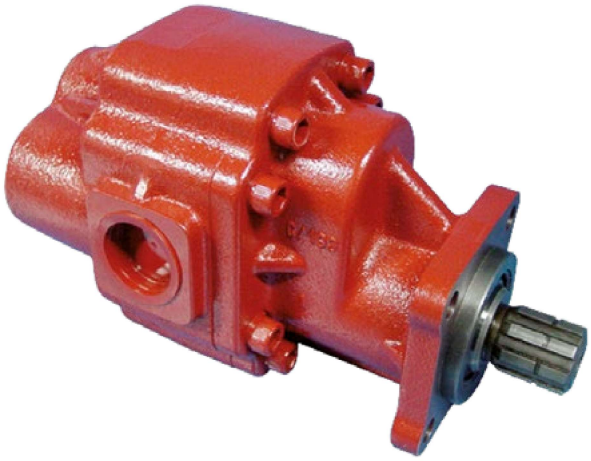

说明 Description

带重型泵体、侧边和后部均有进出油口。输出轴端采用特殊设计，适用于重载应用场合，输出轴端可承受较大径向和轴向载荷。双向旋转。油口螺纹BSP、NPT、SAE可选。

Gear pumps with heavy duty body, side and rear ports. The output shaft end adopts special design, which is suitable for heavy load application. The output shaft end can bear large radial and axial load. Bidirectional rotation. Oil port thread BSP, NPT and SAE are optional.

主参数 Main Data

泵型号 Pump Type		BE XL 85	BE XL 115	BE XL 130	BE XL 150
代码 Part No		5048206	5048306	5048406	5048506
排量（cc/r） Displacement (cm3/rev)		88.5	118	132.8	147.5
最大连续工作压力 Maximum continuous pressure (P1) (bar)		250	250	230	210
最大尖峰压力 Max. peak pressure (P3) (bar)		290	290	270	250
转速 Speed r.p.m	min. (P1)	500	500	500	500
	máx. (P1)	2500	2500	2500	2000
尺寸 Dimensiones (mm)	A	228	240	246	253
	B	142.5	144	150	155
	C	118.48	124.6	127.66	130.7
	D	23.1	23.9	24.3	24.7
重量 Weight (kg)		20.21	21.50	22.40	23.45

重要：参考装配说明 Important: Consult fitting Instructions

BE XL 85/115/130/150

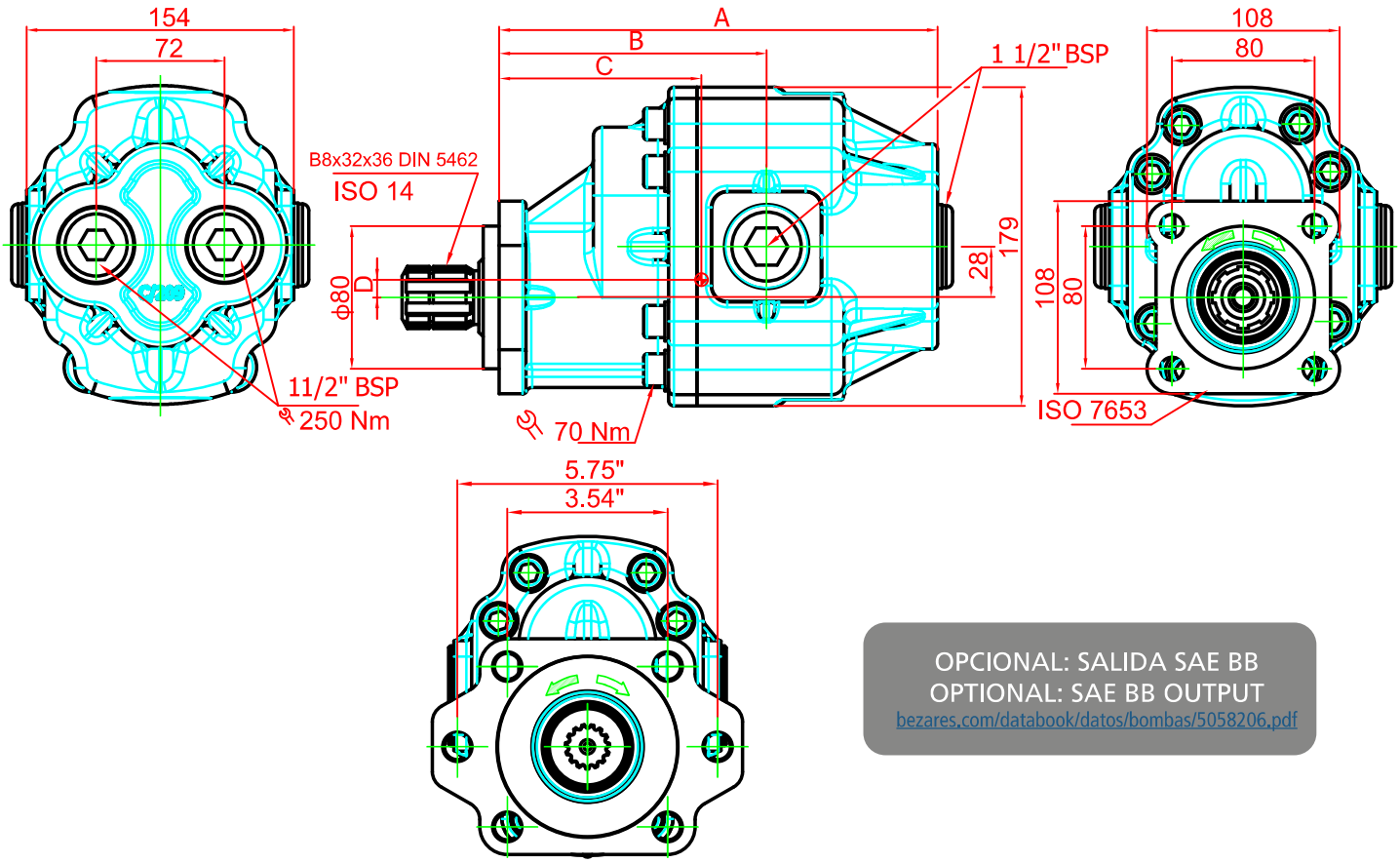

OPCIONAL: SALIDA SAE BB
OPTIONAL: SAE BB OUTPUT
bezares.com/databook/datos/bombas/5058206.pdf

性能曲线
Performance Curves

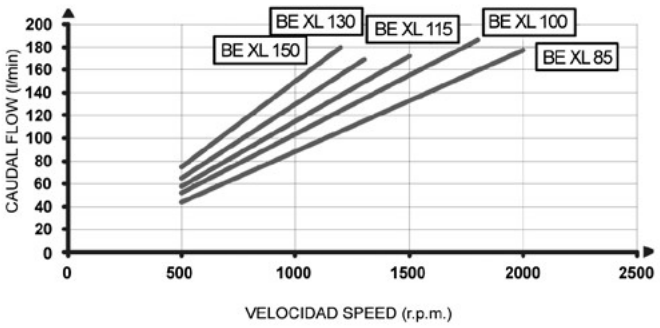

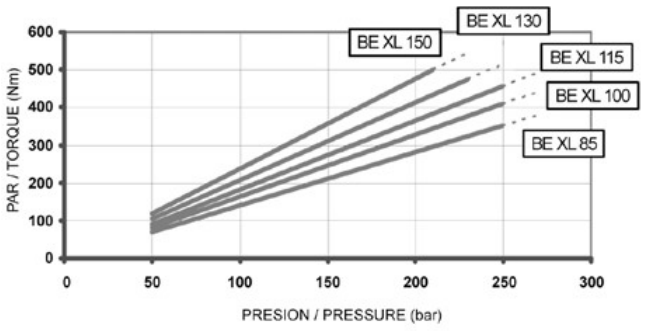

+86 573 8911 0479 • china@bezares.com

佰事瑞帕瓦

BE XLNS 85/100/115/130/150

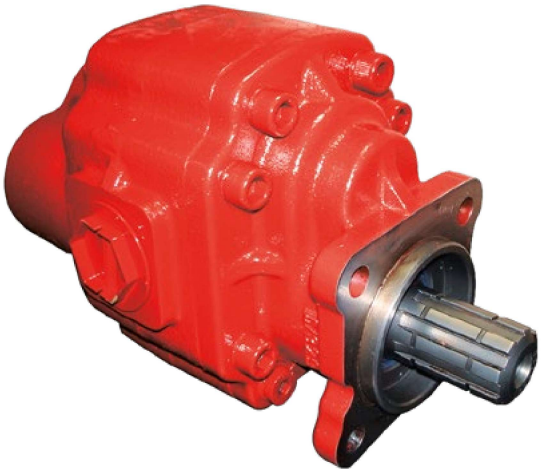

说明 Description

带侧边和后部的高压齿轮泵提供充足的双向安装端口，可用于ISO 4螺栓和SAE 2/4螺栓。连续工作压力高达290bar。输出轴端无轴承支撑。油口螺纹BSP、NPT、SAE可选。

Gear pumps high pressure with side and rear ports witch gives ample mounting bi-directional, available for ISO 4 bolts and SAE 2/4 bolts. Working maximum pressures of 290 bar. There is no bearing support at the output shaft end. Oil port thread BSP, NPT and SAE are optional.

主参数 Main Data

泵型号 Pump Type		BE XLNS 85	BE XLNS 100	BE XLNS 115	BE XLNS 130	BE XLNS 150
代码 Part No		5046206	5046306	5046406	5046506	5046606
排量（cc/r） Displacement (cm3/rev)		88,5	103,3	118	132,8	147,5
最大连续工作压力 Maximum continuous pressure (P1) (bar)			250		230	210
最大尖峰压力 Max. peak pressure (P3) (bar)			290		270	250
转速 Speed r.p.m	min. (P1)			500		
	máx. (P1)	2500	2500	2500	2500	2000
尺寸 Dimensiones (mm)	A	195	201.	208	214	220
	B	110	5116.	112	118	120.
	C	92.6	5	99.3	102.5	5106.
	D		96.3	27		9
重量 Weight (kg)		17.7	18.6	19.35	20	20.7

BE XLNS 85/100/115/130/150

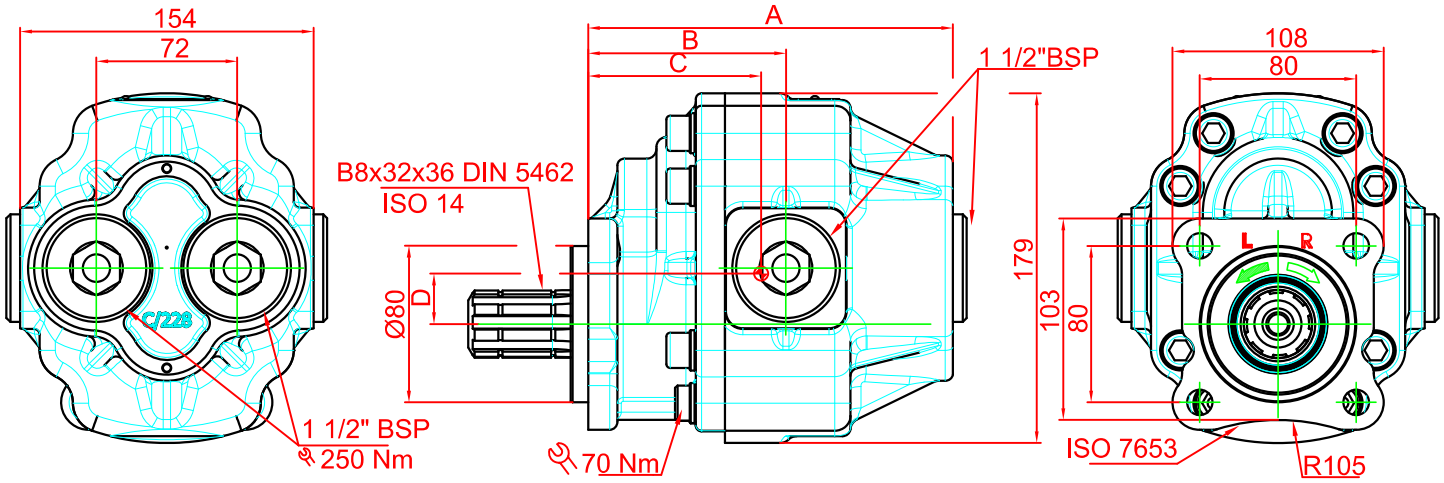

性能曲线
Performance Curves

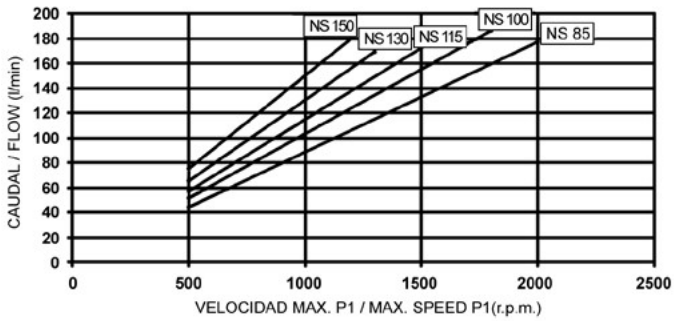

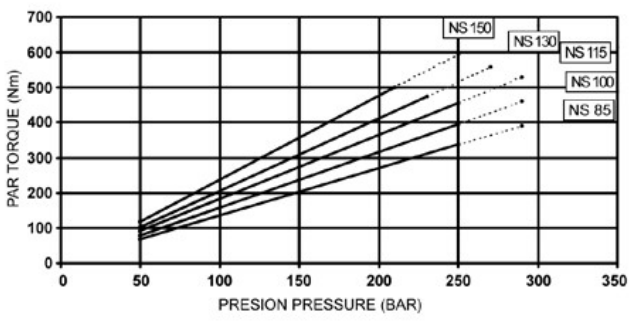

+86 573 8911 0479 • china@bezares.com

佰事瑞帕瓦

CBZ2001-G**/G**-CF**



说明 Description

双联铸铁齿轮泵，采用高强度铸铁材质，侧板采用复合材质，轴向间隙自动补偿设计，使用压力高、寿命长且能长期保持高效率工作。

The double cast iron gear pump is made of high-strength cast iron, the side plate is made of composite material, and the axial clearance is automatically compensated. It has high pressure, long service life and can maintain high efficiency for a long time.

主参数 Main Data

泵型号 Pump Type		32/10	32/16	32/20	40/16	40/20	40/25	50/10	50/20	50/25	63/20	63/25	63/32
代码(右旋+R) Part No		5049106	5049206	5049306	5049406	5049506	5049606	5049706	5049806	5049906	5049116	5049126	5049136
排量(前/后) (cc/r) Displacement (cm3/rev)		32/10	32/16	32/20	40/16	40/20	40/25	50/10	50/20	50/25	63/20	63/25	63/32
最大连续工作压力(前/后)(bar) Maximum continuous pressure (P1)								250/250					250/230
最大尖峰压力(前/后)(bar) Max. peak pressure (P3)								280/280					280/260
转速Speed r.p.m	min. (P1)/máx. (P1)							600/2500					
尺寸 Dimensiones (mm)	d2(±1)	20	20	20	20	20	20	25	25	25	25	25	25
	A(±2)	48	48	48	51	51	51	51	51	51	51	51	51
	L1(±2)	98	98	98	100.5	100.5	100.5	103.5	103.5	103.5	107.5	107.5	107.5
	L2(±2)	192	199.5	204.5	204.5	209.5	216.5	203	215.5	222	223.5	230	239
	L3(±2)	230	237	242	243	247	253.5	241	253	259.5	261	267.5	276.5
	d1/D(±1)	30/65	30/65	30/65	35/76	35/76	35/76	35/76	35/76	35/76	35/76	35/76	35/76
重量 Weight (kg)		19.5	19.8	20.1	20.5	21.0	21.5	20.9	21.9	22.6	23.5	24.5	25.0

旋向Rotation direction	左旋/右旋 Lift/Right

进油压力 Input Pressure	推荐Recommended	0.7÷ 3 bar (abs)	
温度 Temperatures		Desde -25°C a +80°C From -25°C to +80°C	
推荐液压油 Recommended Oil		Mineral oil based hydraulic fluids to ISO / DIN and fire resistant fluids.	
粘度 Viscosity	推荐Recommended	De 12 ÷ 100 mm2/s (cST)	
	允许Allowed	Max. 750 mm2/s (cST)	

CBZ2001-G**/G**-CF**

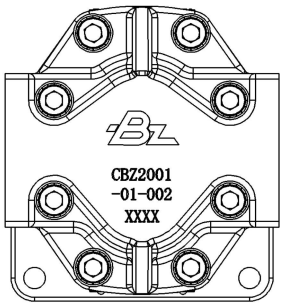

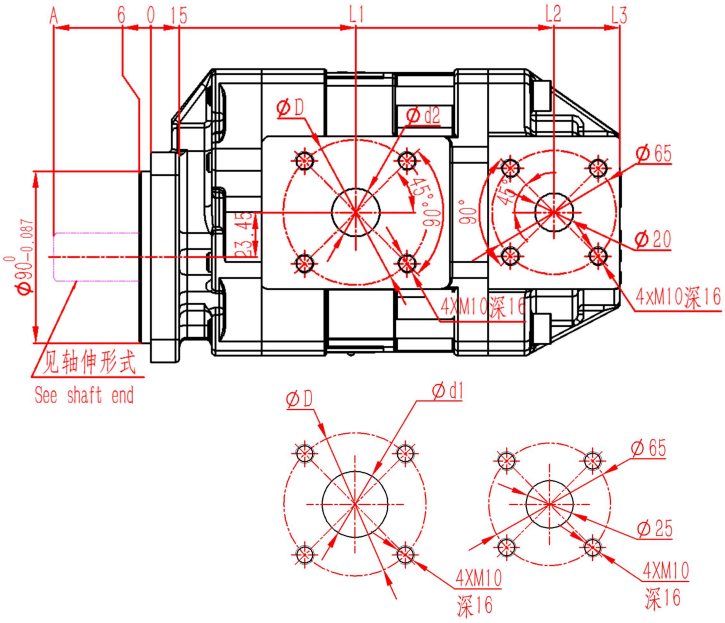

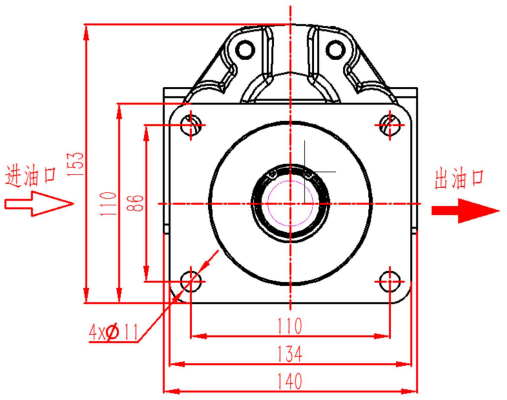

SAE花键	
径节D.P.	16/32
齿数	15
压力角	30°

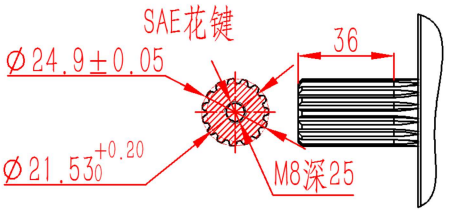

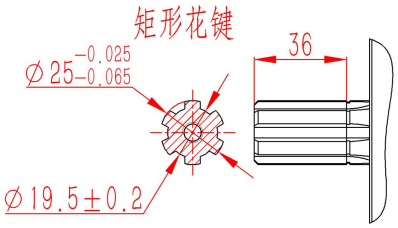

性能曲线
Performance Curves

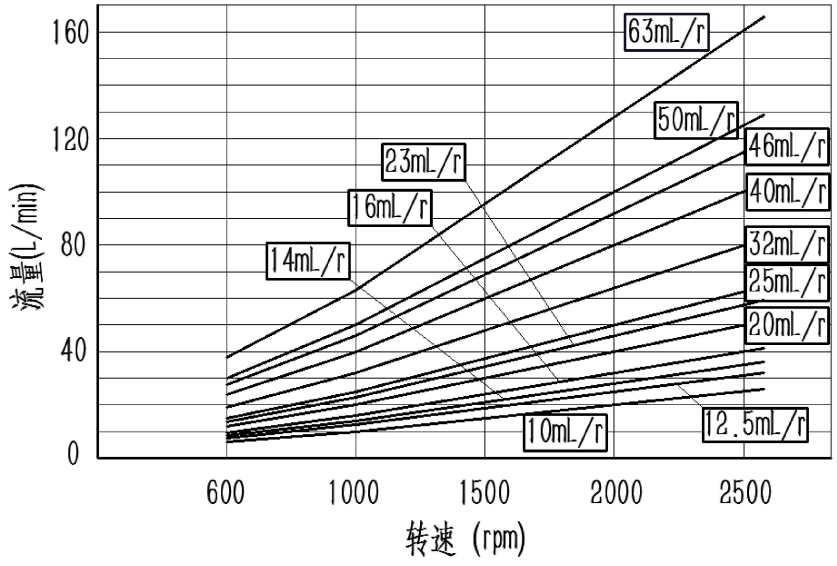

+86 573 8911 0479 • china@bezares.com

佰事瑞帕瓦

CBZ2004-G**/G**-BF**



说明 Description

双联铸铁齿轮泵，采用高强度铸铁材质，侧板采用复合材质，轴向间隙自动补偿设计，使用压力高、寿命长且能长期保持高效率工作。

The double cast iron gear pump is made of high-strength cast iron, the side plate is made of composite material, and the axial clearance is automatically compensated. It has high pressure, long service life and can maintain high efficiency for a long time.

主参数 Main Data

泵型号 Pump Type		73/20	73/24	73/32	73/40	80/20	80/24	80/32	80/40
代码(右旋+R) Part No		5050506	5050606	5050706	5050806	5050906	5050116	5050126	5050136
排量(前/后) (cc/r) Displacement (cm3/rev)		73/20	73/24	73/32	73/40	80/20	80/24	80/32	80/40
最大连续工作压力(前/后)(bar) Maximum continuous pressure (P1)		230/260	230/260	230/250	230/230	230/260	230/260	230/250	230/230
最大尖峰压力(前/后)(bar) Max. peak pressure (P3)		270/300	270/300	270/280	270/270	270/300	270/300	270/280	270/270
转速Speed r.p.m	min. (P1)/máx. (P1)	600/2500							
尺寸 Dimensiones (mm)	d(±1)	19	19	25	25	19	19	25	25
	L1(±2)	129.5	132	137	142	134	136.5	141.5	146.5
	L2(±2)	249	251.5	256.5	261.5	253.5	256.0	261	266
	L3(±2)	293	295.5	300.5	305.5	297.5	300.0	305	310
	W(±0.2)	47.6	47.6	52.4	52.4	47.6	47.6	52.4	52.4
	V(±0.2)	22.2	22.2	26.2	26.2	22.2	22.2	26.2	26.2
重量 Weight (kg)		28.6	29.0	29.8	30.0	29.3	29.7	30.4	31.2

旋向Rotation direction	左旋/右旋 Lift/Right	
进油压力 Input Pressure	推荐Recommended	0.7÷ 3 bar (abs)
温度 Temperatures		Desde -25°C a +80°C From -25°C to +80°C
推荐液压油 Recommended Oil		Mineral oil based hydraulic fluids to ISO / DIN and fire resistant fluids.
粘度 Viscosity	推荐Recommended	De 12 ÷ 100 mm2/s (cST)
	允许Allowed	Max. 750 mm2/s (cST)

CBZ2004-G**/G**-BF**

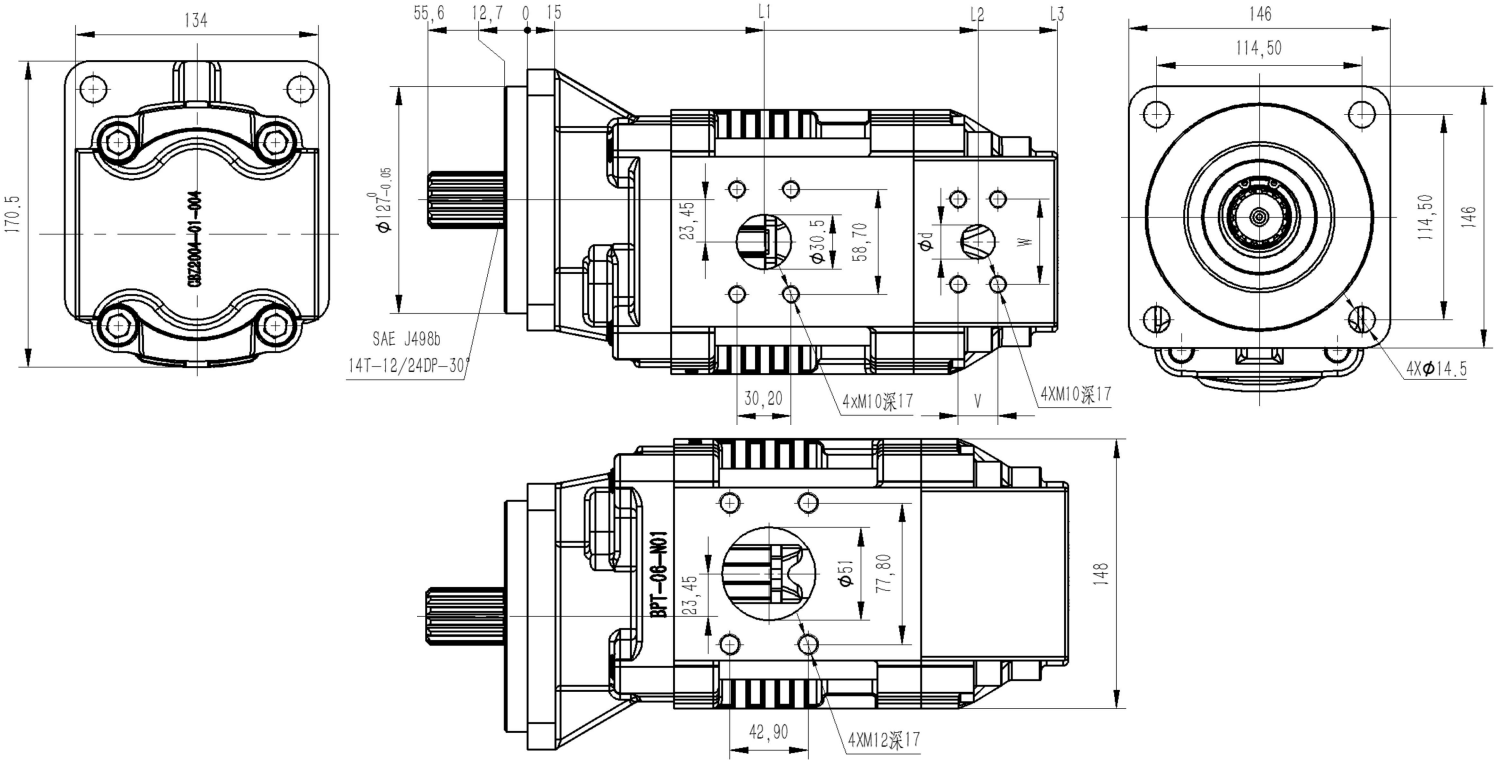

SAE花键 J498b		
1	齿数	14
2	径节	12/24D.P.
3	压力角	30°
4	大径	Φ31.2 0 -0.1
5	小径	Φ26.7 0 -0.13

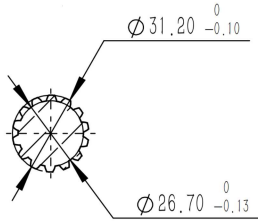

性能曲线
Performance Curves

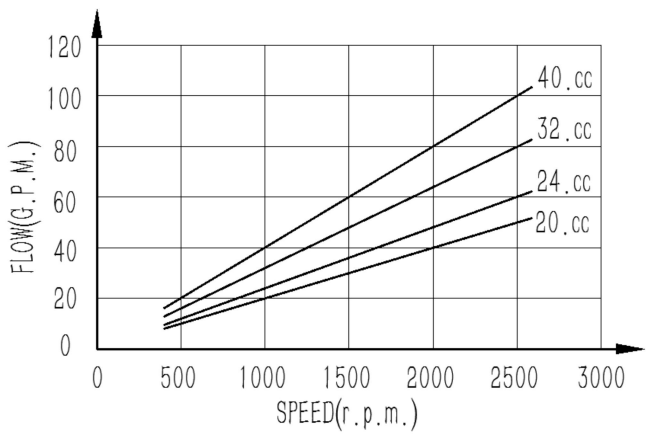

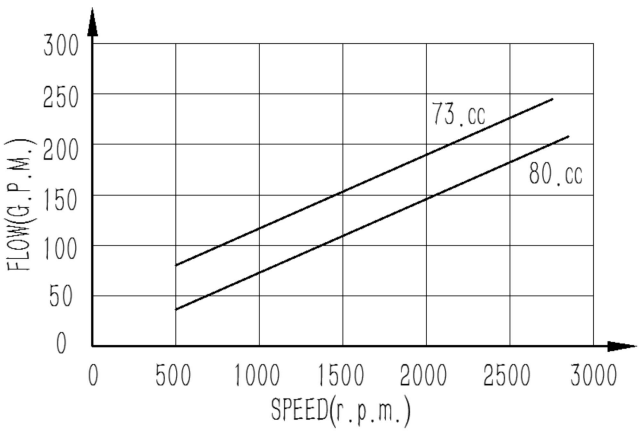

+86 573 8911 0479 • china@bezares.com

佰事瑞帕瓦

液压油/*Hydraulic Fluid*

使用专用优质液压油，并添加抗泡沫和抗磨添加剂。规格必须符合DIN 51524/51525(type HLP).
Use exclusive good quality hydraulic oil with anti-foam and anti-wear additives. The specification of the fluid must conform to DIN 51524 / 51525 (type HLP)

粘度 Viscosity	Aceptable 可接受的	8 - 750 cSt	
	Recomendable 推荐值	10 cSt	非常寒冷气候 / *Very cold climate*
		32 cSt	寒冷气候 / *Cold climate*
		46 cSt	温带气候 / *Temperate climate* Clima
		68 cSt	炎热气候 / *Hot climate*

温度 Temperature	Min. / Max.	5°F / 176°F (-15°C / 80°C) *(0 to P1, 500 to 2000 r.p.m.)*
	冷启动 Cold start	-13°F / 5°F (-25°C / -15°C)

液压回路/*Hydraulic Circuit*

过滤 Filtration	吸油油管 / Suction line	不推荐 / *Not recommended*
	回油管 / Return line	10 to 25 µm

建议在过滤系统中保持符合ISO 4406的污染水平 /
A contamination level according to ISO 4406 is recommended to maintain in the filtration system

管路选择 / Pipe line selection

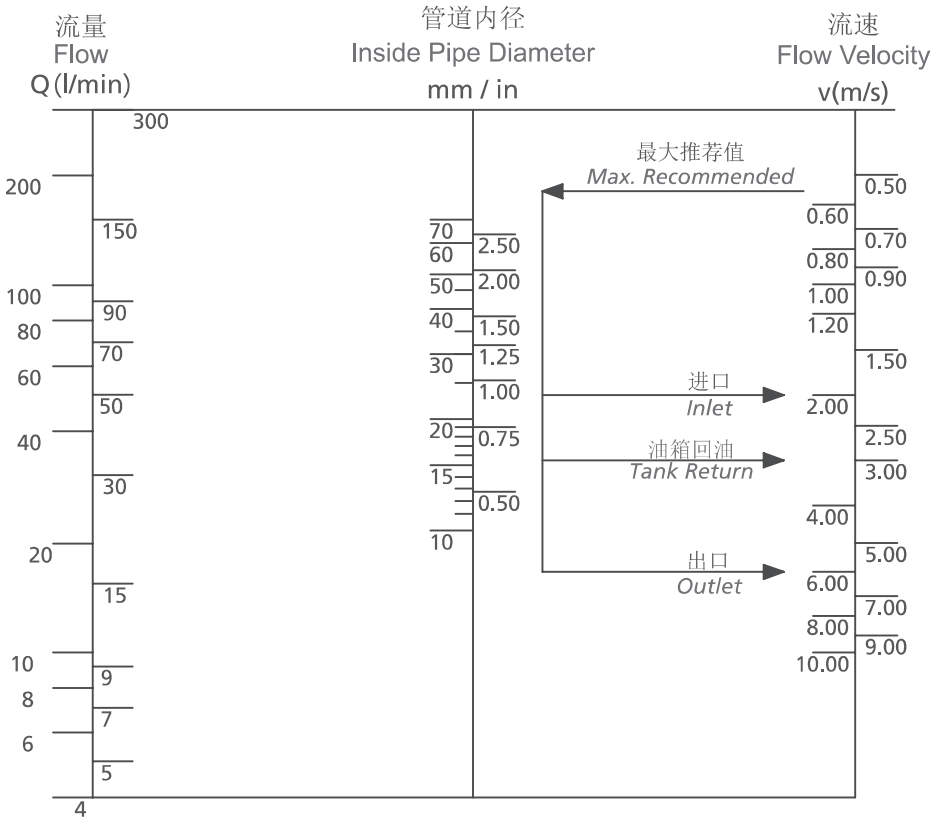

安装/ Installation

如果在安装过程中或之前有任何疑问，请联系佰事瑞帕瓦售后服务部/
In case of doubts during or before assembly, please contact to Bezares Power After Sales Service

旋转方向
Direction of rotation

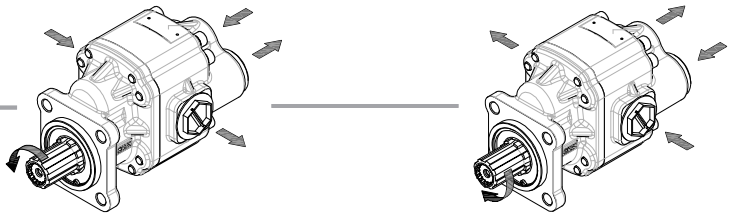

旋转方向
Direction of rotation

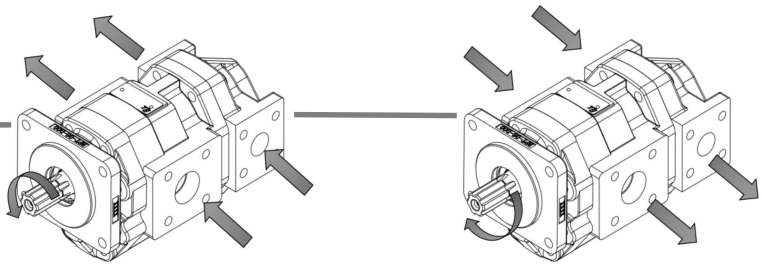

在安装时需先确认取力器或传动轴的旋转方向，对应到泵的旋转方向后，按照上图的指示进行进出油管的安装/
During the installation, the rotation direction of the PTO or drive shaft should be confirmed first, and then the inlet and outlet pipes should be installed according to the instructions in the above figure after corresponding to the rotation direction of the pump

与油箱的位置关系
Position refered to the tank

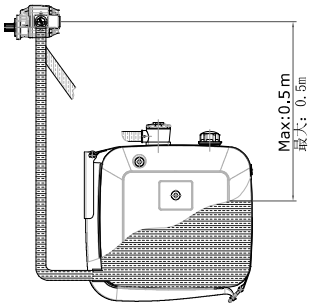

固定螺栓的扭矩拧紧设置
Torque tightness setting for fixing bolts

M10	M12	1/2"
50±5 Nm	85±5 Nm	85±5 Nm

轴花键润滑
Shaft spline lubrication

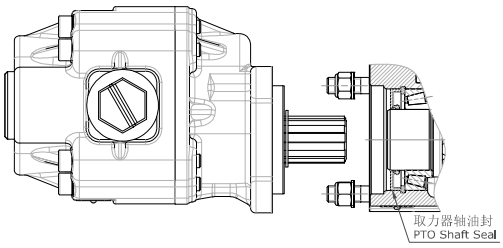

注：1. 当PTO装配有内置轴封时，泵的轴花键必须用耐热润滑脂润滑。（见图纸示例）When the PTO is equipped with a built-in shaft seal, the shaft spline of the pump must be lubricated with heat-resistant grease. (see drawing example)

2. 安装齿轮泵时需先确认泵输出轴端是否有轴承支撑，无轴承支撑泵在安装时需增加轴承支撑或直接安装至带轴承的取力器中。Before installing the gear pump, it is necessary to confirm whether there is bearing support at the output shaft end of the pump. If there is no bearing support, the bearing support should be added or directly installed into the power take-off with bearing.

佰事瑞帕瓦

液压泵选型说明 Hydraulic Pump Selection Instructions

BE(Z)/CBZ系列 BE(Z)/CBZ SERIES

BE(Z)系列是一种带有侧边和后端油口的双旋向衬套式齿轮泵。专为各种应用而设计和制造，提供高效率和高性能。广泛的法兰、轴伸、排量和油口选择。

BE(Z) series is a bi-rotational bushing style gear pump with side and rear ports .Designed and engineered for a wide range of applications offering high efficiency and performance. A wide range of flanges, shafts, displacements, and porting options available.

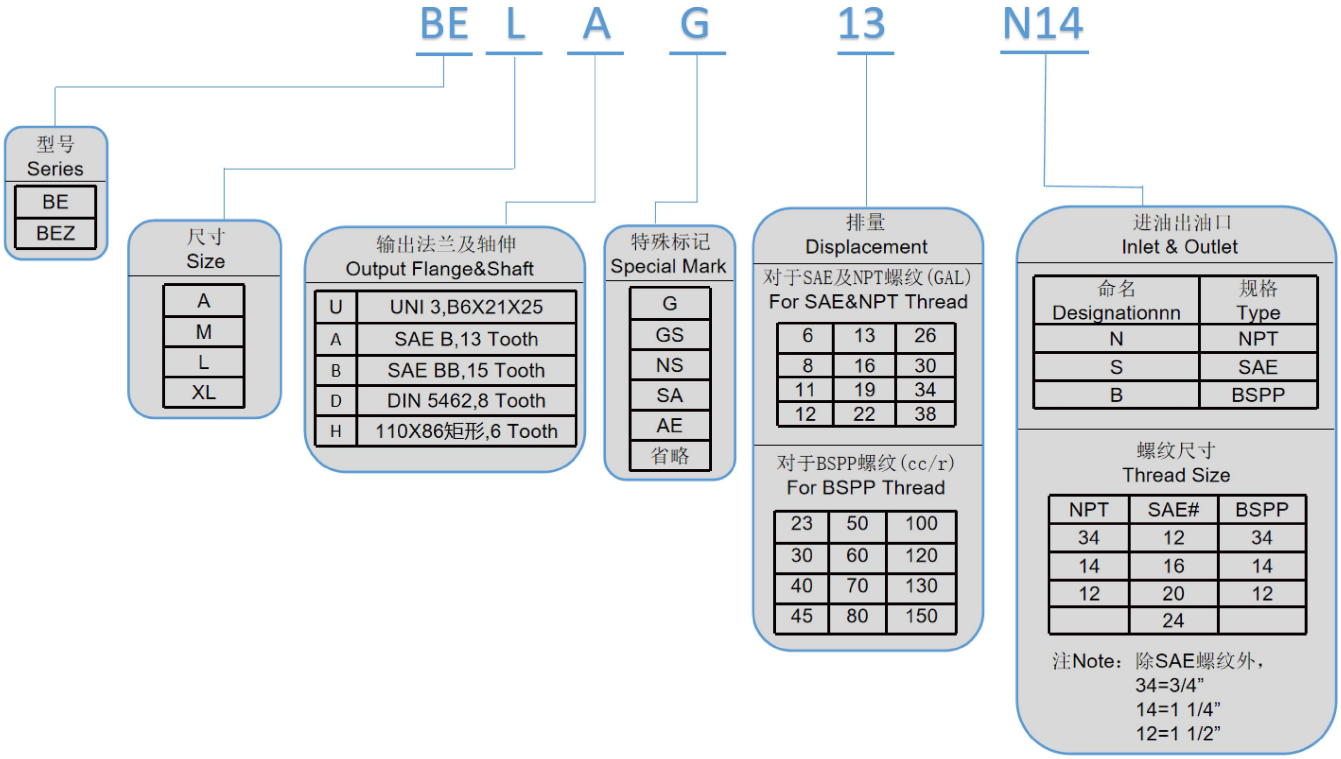

CBZ系列双联铸铁齿轮泵，采用高强度铸铁材质，侧板采用复合材质，轴向间隙自动补偿设计，使用压力高、寿命长且能长期保持高效率工作。

CBZ series double cast iron gear pump is made of high-strength cast iron, the side plate is made of com-posite material, and the axial clearance is automatically compensated. It has high pressure, long service life and can maintain high efficiency for a long time.

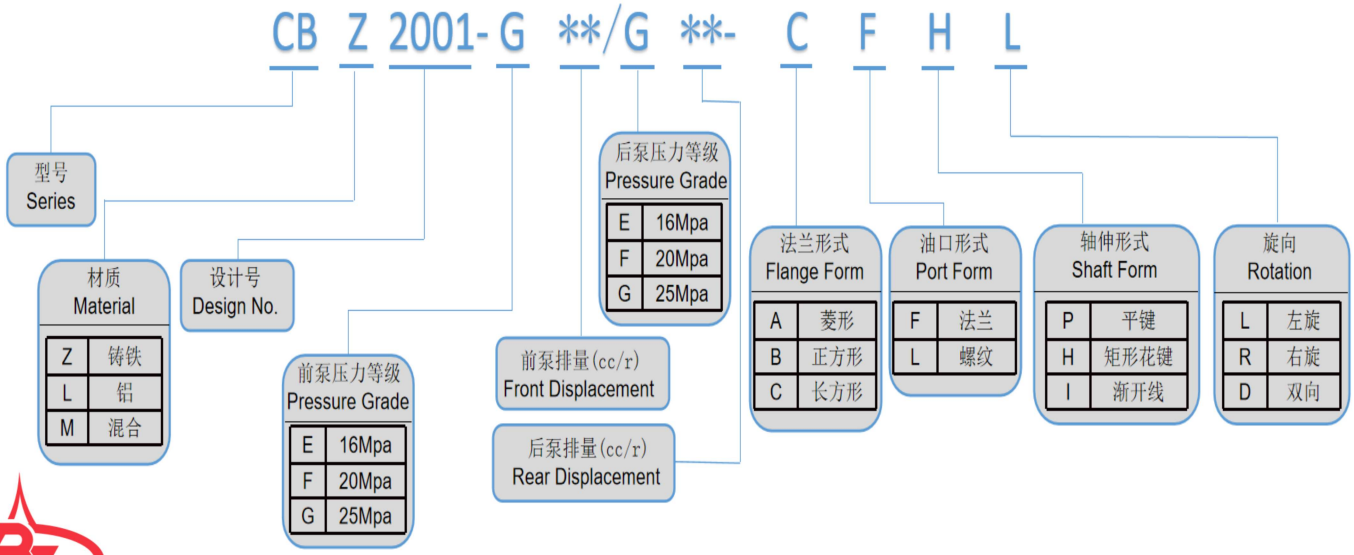

佰事瑞帕瓦



Bezares 西班牙
Calle Mollet, 28 08120 La Llagosta,
Barcelona, Spain • +34 935 743 655
bezaresbarna@bezares.com

Bezares 法国
106, Avenue des roses, Zac de la butte gayen
94440 Santeny, France • +33 014 510 1540
bezaresfrance@bezares.com

Bezares 中国
No. 8. Hongfu East Road, Yaozhuang Town
Zhejiang Province, china
+86 573 8911 0479 • china@bezares.com

Bezares 墨西哥
4ª avenida nº 980 colonia. Zimix
Santa catarina, n.l. Mexico, 66358 Monterrey
+52 81 1287 0090 • info@bezaresmexico.com

Bezares 意大利
Via dell' artigianato, 4/B • 31034
Cavaso del tomba, Italy • +390 423 544 105
italia@bezares.com

Bezares 美国
27634 Commerce Oaks Drive, Oak Ridge north,
Texas 77385, USA • +1 888 663 1786
pto@bezares.com

BEZARES HEADQUARTERS
Av. de las Retamas, 145
45950 Casarrubios del Monte
Toledo, **Spain**
+34 91 818 82 97
bezares@bezares.com

0/21/09/20

佰事瑞帕瓦
bezares.com