SQK80-2

折臂式随车起重机

KNUCKLE BOOM TRUCK-MOUNTED CRANE



起重机主要参数
Main Parameters of Crane

项目 Item		单位 Unit	SQK80-2	项目 Item		单位 Unit	SQK80-2
最大额定起重量	Max. Rated Lifting Capacity	kg	3200	推荐使用功率	Recommended Power Input	kW	14
最大起重力矩	Max. Lifting Moment	t·m	6.8	系统额定流量	System Rated Flow	L/min	32
最大额定工作幅度	Max. Rated Working Radius	m	7.73	系统额定压力	System Rated Pressure	MPa	25
回转角度	Slewing Angle	°	360	液压油箱容积	Hydraulic Oil Tank Capacity	L	80
安装所需最小空间	Min. Installation Clearance	mm	950	整机重量**	Machine Weight**	kg	1600
支腿跨距*	Outrigger Span*	mm	1900-4300				

*支腿中心到中心长度数据　*Center-to-center length of outriggers

**仅指起重机部分，不包含后支腿及其他附件　**Crane unit only (excluding rear outriggers & accessories)

可选装配置
Optional configurations



遥控器
Remote Control



力矩限制器
Rated Capacity Limiter



作业篮
Aerial Work Basket



加高前支腿
Heightened Front Outriggers



翻转前支腿
Folding Front Outriggers

SQK80-2 折臂式随车起重机产品特点
SQK80-2 Knuckle Boom Truck-Mounted Crane — Product Features

SQK80-2型折臂式起重机最大起重量为3200 kg，最大工作半径7.73 m，在该半径下仍可起吊700 kg重物，能够从容应对狭窄复杂工况下的吊装挑战。设备支持360°全回转，操控灵活，作业覆盖范围广。安装所需最小空间仅950mm，自重适中，在实现紧凑布置的同时保障作业稳定性。液压系统与整机工况精准匹配，为起重作业提供可靠保障。整机便于运输转场和现场布置，可适应空间受限场地及多种轻型吊装作业需求，是轻型吊装作业的理想之选。

The SQK80-2 knuckle boom crane has a maximum lifting capacity of 3,200 kg and a maximum working radius of 7.73 m. At this radius, it can still lift a 700 kg load, enabling it to handle lifting challenges under narrow and complex working conditions with ease. The machine supports 360° slewing, offering flexible operation and wide working coverage. It requires a minimum installation space of only 950 mm and has a moderate weight, ensuring working stability while maintaining a compact layout. The hydraulic system is precisely matched to the machine's operating conditions, providing reliable support for lifting operations. The machine is easy to transport, relocate, and set up on site, and can adapt to space-constrained sites and various light lifting needs, making it an ideal choice for light lifting operations.

起重机外形尺寸图
Outline Dimensions

单位UNIT（mm）

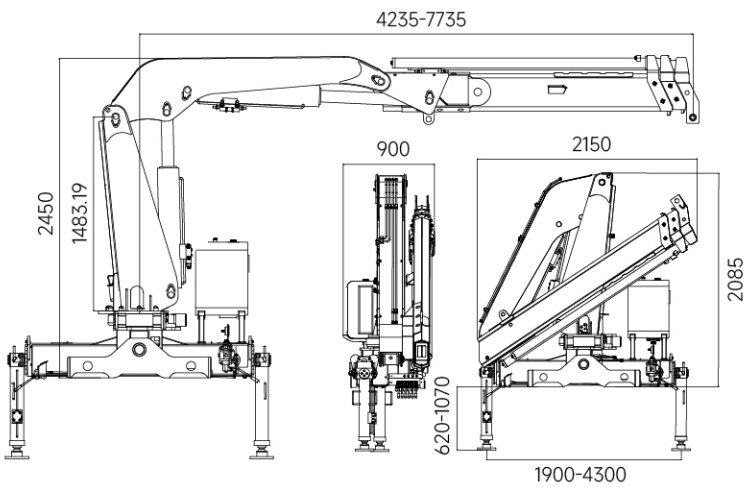

起重机力矩图
Load Moment Chart

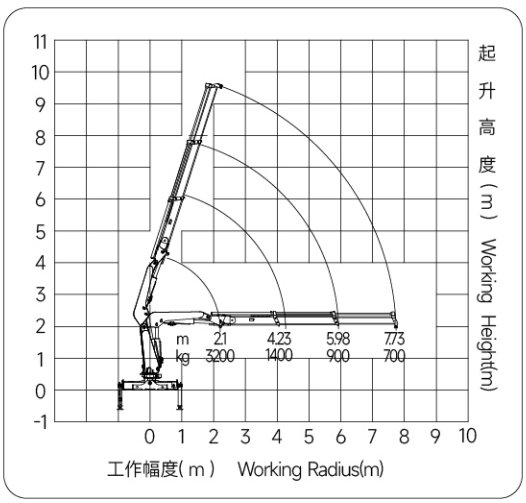

地址：河南省开封市兰考县华梁路18号
Addr: No. 18 Hualiang Road, Lankao County, Kaifeng City, Henan Province, China
国内Cn：www.scinlea.cn | 国际En：www.scinlea.com
全国服务电话 Service Hotline (Cn): 400-0378-518
WhatsApp / WeChat: +86 198 3688 8398
Email: sales@scinlea.com
微信视频号 WeChat Channels
抖音 Douyin

SQK157-3

折臂式随车起重机

KNUCKLE BOOM TRUCK-MOUNTED CRANE



起重机主要参数
Main Parameters of Crane

项目 Item		单位 Unit	SQK157-3
最大额定起重量	Max. Rated Lifting Capacity	kg	6300
最大起重力矩	Max. Lifting Moment	t·m	13
最大额定工作幅度	Max. Rated Working Radius	m	9.8
回转角度	Slewing Angle	°	360
安装所需最小空间	Min. Installation Clearance	mm	1100
支腿跨距*	Outrigger Span*	mm	2230-5030

项目 Item		单位 Unit	SQK157-3
推荐使用功率	Recommended Power Input	kW	22
系统额定流量	System Rated Flow	L/min	40
系统额定压力	System Rated Pressure	MPa	28
液压油箱容积	Hydraulic Oil Tank Capacity	L	150
整机重量**	Machine Weight**	kg	2710

*支腿中心到中心长度数据　*Center-to-center length of outriggers

**仅指起重机部分，不包含后支腿及其他附件　**Crane unit only (excluding rear outriggers & accessories)

可选装配置
Optional configurations



遥控器
Remote Control



力矩限制器
Rated Capacity Limiter



作业篮
Aerial Work Basket



加高前支腿
Heightened Front Outriggers



翻转前支腿
Folding Front Outriggers

SQK157-3 折臂式随车起重机产品特点
SQK157-3 Knuckle Boom Truck-Mounted Crane — Product Features

SQK157-3型折臂式起重机面向中型吊装作业，具备6.3吨起重量与9.8米工作半径，在较大幅度下仍能稳定起重，可胜任设备检修、构件安装及现场吊运。整机支持360°全回转，折臂展开灵活，可从不同方位接近作业点并连续作业，减少设备反复移位。上装布置紧凑，配合宽距支腿，整机支撑更稳，为狭窄复杂工况提供可靠支撑。液压系统与整机工况匹配，动作平稳、响应可靠，提升操作安全性与作业效率。整车转场布置便捷，可适应空间受限场地及多种施工需求，助力用户提升效率、创造更多价值。

The SQK157-3 knuckle boom crane is designed for medium-duty lifting operations, with a 6.3 t lifting capacity and a 9.8 m working radius. It maintains stable lifting performance at larger radii and is well suited to equipment maintenance, component installation, and on-site lifting and transport. The machine supports 360° slewing, and its knuckle boom deploys flexibly, allowing it to approach work points from different directions for continuous operation and reducing repeated equipment repositioning. Its compact mounting layout, combined with a wide outrigger spread, ensures greater working stability and provides reliable support in narrow and complex working conditions. The hydraulic system is matched to the machine's operating conditions, delivering smooth motion and reliable response, enhancing operational safety and work efficiency. The machine is easy to transport, relocate, and set up, and can adapt to space-constrained sites and various construction needs, helping users improve efficiency and create greater value.

起重机外形尺寸图
Outline Dimensions

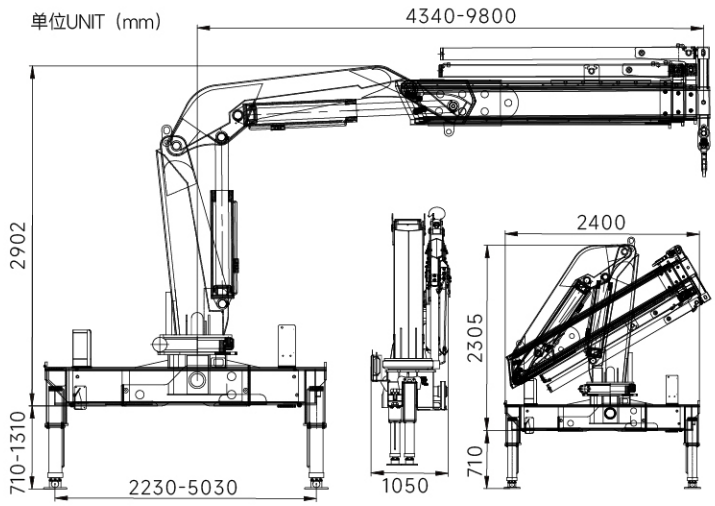

起重机力矩图
Load Moment Chart

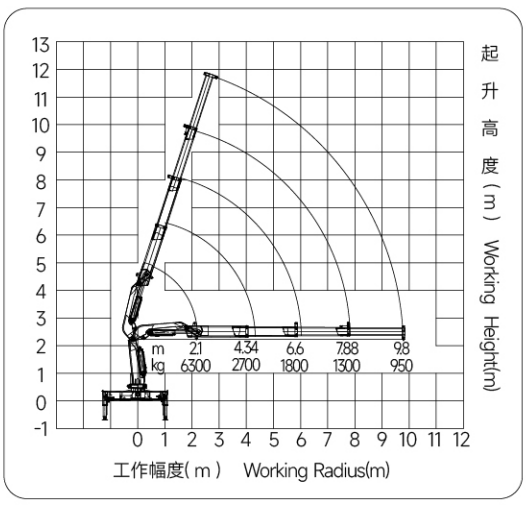

地址：河南省开封市兰考县华梁路18号
Addr: No. 18 Hualiang Road, Lankao County, Kaifeng City, Henan Province, China

全国服务电话 Service Hotline (Cn): 400-0378-518
WhatsApp / WeChat: +86 198 3688 8398
Email: sales@scinlea.com

国内Cn：www.scinlea.cn | 国际En：www.scinlea.com

微信视频号 WeChat Channels
抖音 Douyin

SQK200-4

折臂式随车起重机

KNUCKLE BOOM TRUCK-MOUNTED CRANE

SCINLEA 明健神力



起重机主要参数
Main Parameters of Crane

项目 Item		单位 Unit	SQK200-4
最大额定起重量	Max. Rated Lifting Capacity	kg	8000
最大起重力矩	Max. Lifting Moment	t·m	16
最大额定工作幅度	Max. Rated Working Radius	m	10.8
回转角度	Slewing Angle	°	360
安装所需最小空间	Min. Installation Clearance	mm	1300
支腿跨距*	Outrigger Span*	mm	2230-5430

项目 Item		单位 Unit	SQK200-4
推荐使用功率	Recommended Power Input	kW	25
系统额定流量	System Rated Flow	L/min	50
系统额定压力	System Rated Pressure	MPa	28
液压油箱容积	Hydraulic Oil Tank Capacity	L	200
整机重量**	Machine Weight**	kg	3730

*支腿中心到中心长度数据　*Center-to-center length of outriggers

**仅指起重机部分，不包含后支腿及其他附件　**Crane unit only (excluding rear outriggers & accessories)

可选装配置
Optional configurations



遥控器 Remote Control



力矩限制器 Rated Capacity Limiter



作业篮 Aerial Work Basket



加高前支腿 Heightened Front Outriggers



翻转前支腿 Folding Front Outriggers

SQK200-4折臂式随车起重机产品特点
SQK200-4 Knuckle Boom Truck-Mounted Crane — Product Features

SQK200-4型折臂式起重机面向中重型吊装，具备8吨级起重量与10.8米工作半径，较大幅度下仍能稳定起重，胜任设备安装、构件吊运及物流装卸。整机支持360°全回转，折臂灵活，可从多方位接近作业点并连续作业，减少反复移位。上装布置紧凑，配合宽距支腿，整机支撑更稳、抗倾覆能力更强，兼顾狭小场地适应性与重载作业稳定性。液压系统匹配整机工况，输出稳定、动作可靠，为重型吊装提供持续动力。整车转场布置便捷，可适应受限场地及多种重型施工需求，助力提升作业效率。

The SQK200-4 knuckle-boom crane is designed for medium- to heavy-duty lifting, with an 8-tonne-class lifting capacity and a 10.8 m working radius. It maintains stable lifting performance at larger radii and is well suited to equipment installation, component lifting and transport, and logistics loading and unloading. The machine supports 360° slewing, and its flexible knuckle boom allows it to approach work points from multiple directions for continuous operation, reducing repeated repositioning. Its compact mounting layout, combined with a wide outrigger spread, provides greater stability and stronger anti-overturning capability, balancing confined-site adaptability with heavy-load stability. The hydraulic system is matched to the machine's operating conditions, delivering stable output and reliable response for continuous heavy-lifting power. The machine is easy to transport, relocate, and set up, and can adapt to space-constrained sites and various heavy-duty construction needs, helping improve operational efficiency.

起重机外形尺寸图
Outline Dimensions

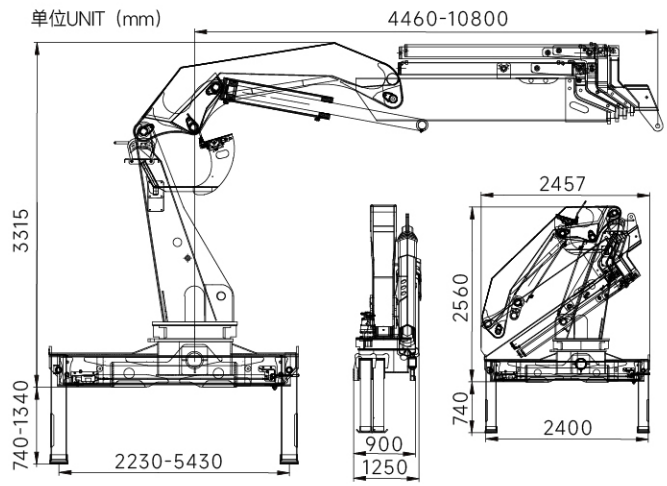

起重机力矩图
Load Moment Chart

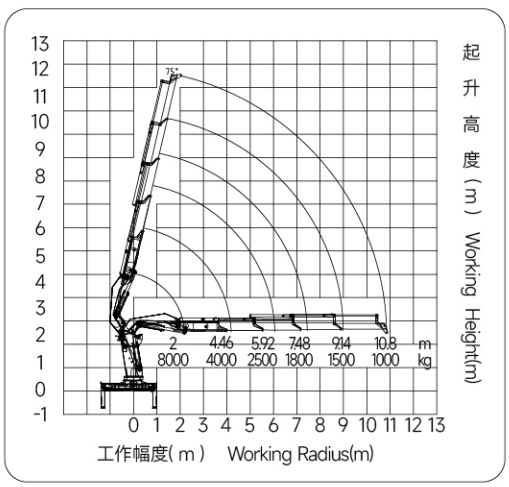

地址：河南省开封市兰考县华梁路18号
Addr: No. 18 Hualiang Road, Lankao County, Kaifeng City, Henan Province, China

全国服务电话 Service Hotline (Cn): 400-0378-518
WhatsApp / WeChat: +86 198 3688 8398
Email: sales@scinlea.com

国内Cn：www.scinlea.cn | 国际En：www.scinlea.com

微信视频号 WeChat Channels

抖音 Douyin

SQS200-5/6

直臂式随车起重机螺旋钻版

STRAIGHT BOOM
TRUCK-MOUNTED CRANE AUGER VERSION

SCINLEA 明健神力



起重机主要参数
Main Parameters of Crane

项目 Item		单位 Unit	SQS200-5	SQS200-6
最大额定起重量	Max. Rated Lifting Capacity	kg	8000	8000
最大起重力矩	Max. Lifting Moment	t·m	20	20
最大额定工作幅度	Max. Rated Working Radius	m	17.5	20.4
最大起升高度	Max. Lifting Height	m	19.3	22.2
最大变幅角度	Max. Luffing Angle	°	75	75
回转角度	Slewing Angle	°	360	360
起重臂节数	Boom Sections	节	5	6
基本臂工作半径	Basic Boom Working Radius	mm	5300	5700

项目 Item		单位 Unit	SQS200-5	SQS200-6
前支腿跨距*	Front Outrigger Span*	mm	2400-5600	2400-5600
后支腿跨距*	Rear Outrigger Span*	mm	2400-3700	2400-3700
安装所需最小间距	Min. Installation Clearance	mm	1047	1047
推荐使用功率	Recommended Power Input	kW	27	27
系统额定流量	System Rated Flow	L/min	63	63
系统额定压力	System Rated Pressure	MPa	25	25
液压油箱容积	Hydraulic Oil Tank Capacity	L	130	130
整机重量**	Machine Weight**	kg	4500	4900

*支腿边缘到边缘长度数据　*Edge-to-edge length of outriggers
**仅指起重机部分，不包含后支腿及其他附件　**Crane unit only (excluding rear outriggers & accessories)

可选装配置
Optional configurations


遥控器 Remote Control


先导控制 Pilot Control


力矩限制器 Rated Capacity Limiter


作业篮 Aerial Work Basket


驾驶室 Cab


加高前支腿 Heightened Front Outriggers


翻转前支腿 Folding Front Outriggers


副钩 Auxiliary Hook


螺旋钻 Auger


副臂 Jib

SQS200-5/6随车起重机螺旋钻版产品特点
SQS200-5/6 Straight Boom Truck-Mounted Crane Auger Version — Product Features

SQS200-5/6面向中长轴距单桥4×2底盘开发，适配货箱长度超6米，兼顾载运效率、起重能力与机动性能。螺旋钻版在SQS200基础上拓展钻孔作业能力，支持大臂负角度，适用于基础施工、杆件安装、园林绿化及场地钻孔等工况。

该版本采用高强钢U型截面直臂结构，标配双联泵液压系统、敏感比例控制阀、温控散热器及自动收钩装置，复合动作流畅、微动控制精准；可选装双级伸缩支腿，进一步提升复杂工况适应性。产品提供5节臂和6节臂两种版本：5节臂均衡实用，6节臂最大作业半径覆盖20米，起升高度更高。负角度与螺旋钻配置协同，使钻杆作业姿态更灵活、对孔调整更便捷，让SQS200-5/6在钻孔及吊装综合作业中更具针对性，是均衡全能、扩展性强的随车吊选择。

The SQS200-5/6 is developed for medium-to-long wheelbase, single-drive-axle 4×2 chassis and is suitable for cargo body lengths over 6 m, balancing transport efficiency, lifting capacity, and maneuverability. The auger version extends the SQS200's drilling capability and supports a negative boom angle, making it suitable for foundation construction, pole installation, landscaping, and on-site drilling applications.

This version features a high-strength steel U-section straight boom structure. It comes standard with a dual-pump hydraulic system, load-sensing proportional control valves, a temperature-controlled radiator, and an automatic hook stowing device, delivering smooth compound movements and precise micro-control. Optional two-stage telescopic outriggers further enhance adaptability to complex working conditions. Two boom versions are available: the five-section boom is balanced and practical, while the six-section boom offers a maximum working radius of up to 20 m and a higher lifting height. The negative angle works in tandem with the auger configuration to provide more flexible drill-rod positioning and easier hole alignment, making the SQS200-5/6 better targeted for combined drilling and lifting operations. It is a balanced, versatile, and highly expandable truck-mounted crane choice.

起重机外形尺寸图
Outline Dimensions

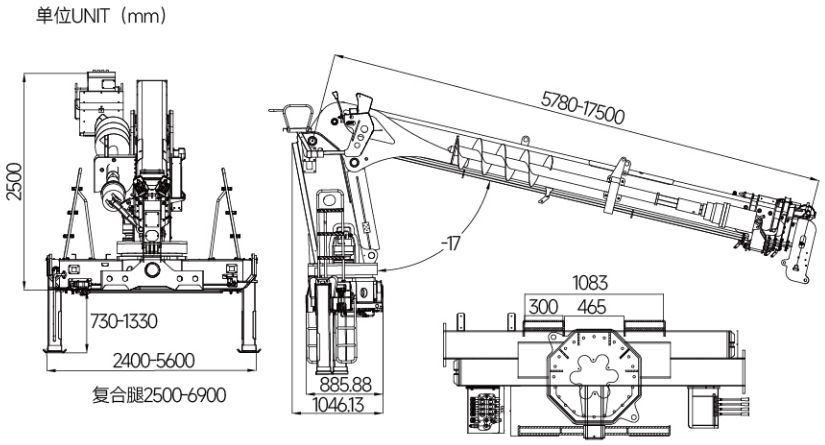

起重机力矩图
Load Moment Chart

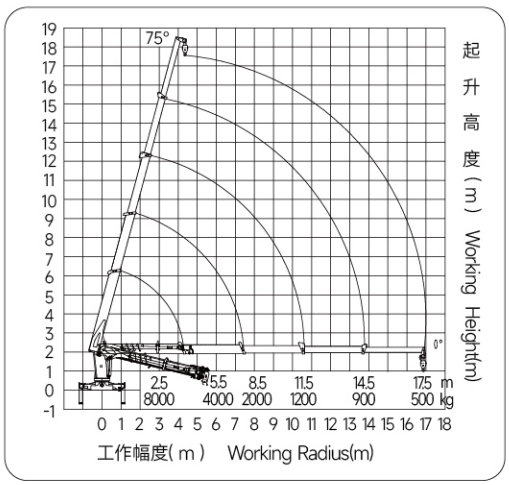

地址：河南省开封市兰考县华梁路18号
Addr: No. 18 Hualiang Road, Lankao County, Kaifeng City, Henan Province, China

全国服务电话 Service Hotline (Cn): 400-0378-518
WhatsApp / WeChat: +86 198 3688 8398
Email: sales@scinlea.com

国内Cn：www.scinlea.cn | 国际En：www.scinlea.com

微信视频号 WeChat Channels
抖音 Douyin

SQS300-5/6

直臂式随车起重机驾驶室版

STRAIGHT BOOM
TRUCK-MOUNTED CRANE CAB VERSION



起重机主要参数
Main Parameters of Crane

项目 Item		单位 Unit	SQS300-5	SQS300-6
最大额定起重量	Max. Rated Lifting Capacity	kg	12000	12000
最大起重力矩	Max. Lifting Moment	t·m	30	30
最大额定工作幅度	Max. Rated Working Radius	m	19.3	23
最大起升高度	Max. Lifting Height	m	21.2	24.7
最大变幅角度	Max. Luffing Angle	°	75	75
回转角度	Slewing Angle	°	360	360
起重臂节数	Boom Sections	节	5	6
基本臂工作半径	Basic Boom Working Radius	mm	5300	5400

项目 Item		单位 Unit	SQS300-5	SQS300-6
前支腿跨距*	Front Outrigger Span*	mm	2500-7100	2500-7100
后支腿跨距*	Rear Outrigger Span*	mm	2400-4900	2400-4900
安装所需最小间距	Min. Installation Clearance	mm	1332	1332
推荐使用功率	Recommended Power Input	kW	30	30
系统额定流量	System Rated Flow	L/min	80	80
系统额定压力	System Rated Pressure	MPa	25	25
液压油箱容积	Hydraulic Oil Tank Capacity	L	180	180
整机重量**	Machine Weight**	kg	5230	5788

*支腿边缘到边缘长度数据　*Edge-to-edge length of outriggers
**仅指起重机部分，不包含后支腿及其他附件　**Crane unit only (excluding rear outriggers & accessories)

可选装配置
Optional configurations


遥控器 Remote Control


先导控制 Pilot Control


力矩限制器 Rated Capacity Limiter


作业篮 Aerial Work Basket


驾驶室 Cab


加高前支腿 Heightened Front Outriggers


翻转前支腿 Folding Front Outriggers


副钩 Auxiliary Hook


螺旋钻 Auger


副臂 Jib

SQS300-5/6直臂式随车起重机驾驶室版产品特点
SQS300-5/6 Straight Boom Truck-Mounted Crane Cab Version — Product Features

SQS300-5/6驾驶室版面向重载吊装与高频连续作业场景，在SQS300-5/6随车起重机基础上开发，推荐匹配6×4重卡底盘，适配加长货箱，兼顾起重能力、承载性能与道路通过性。吊臂采用高强钢U型截面直臂结构：5节臂版本均衡实用，覆盖多数常规重载工况；6节臂版本最大作业半径达23米，起升高度更高。双级伸缩支腿跨距超7米，为重型吊装提供稳固支撑。标配双联泵、敏感比例阀、智能温控散热系统和自动收钩装置，复合动作流畅、微动控制精准；可选双回转减速机与斜轴柱塞马达，进一步提升操作精度与耐用性。

加装专用驾驶室后，操作者可实现封闭作业，有效隔绝风雨、粉尘和极端温度；驾驶室配备空调并可采用先导手柄操控，配合优化视野布局，降低长时间作业疲劳，提升连续作业效率与安全性。产品适用于重型机械搬迁、钢结构厂房施工、大型电力设施安装、重型园林树木移植等重载工况，是兼顾性能、舒适与效率的重型随车吊方案。

The SQS300-5/6 Cab Version is designed for heavy-duty lifting and high-frequency continuous operation. Developed on the basis of the SQS300-5/6 truck-mounted crane, it is recommended for 6×4 heavy-duty truck chassis and extended cargo bodies, balancing lifting capacity, load-carrying performance, and road mobility. This version features a high-strength steel U-section straight boom structure: the five-section boom version is balanced and practical, covering most conventional heavy-duty lifting conditions; the six-section boom version offers a maximum working radius of 23 m and a higher lifting height. The two-stage telescopic outriggers provide a span of over 7 m, ensuring stable support for heavy-duty lifting. Standard equipment includes dual pumps, load-sensing proportional valves, an intelligent temperature-controlled cooling system, and an automatic hook stowing device, delivering smooth compound movements and precise micro-control. Optional dual slewing reducers and bent-axis piston motors further improve operating precision and durability.

With the dedicated cab installed, the operator can work in a closed environment, effectively protected from wind, rain, dust, and extreme temperatures. The cab is equipped with air conditioning and can be fitted with pilot joystick control, together with an optimized visibility layout, reducing fatigue during prolonged operation and improving continuous-operation efficiency and safety. The product is suitable for heavy machinery relocation, steel structure plant construction, large power facility installation, heavy landscape tree transplanting, and other heavy-duty conditions. It is a heavy-duty truck-mounted crane solution that combines performance, comfort, and efficiency.

起重机外形尺寸图
Outline Dimensions

单位UNIT（mm）

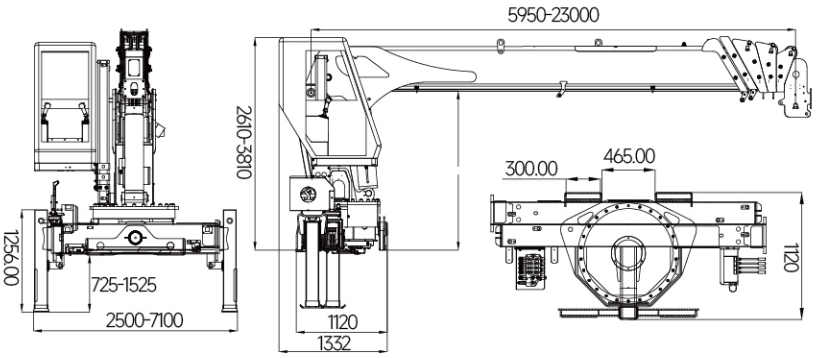

起重机力矩图
Load Moment Chart

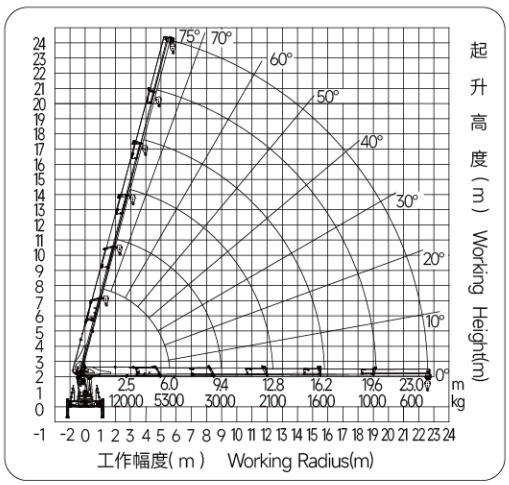

地址：河南省开封市兰考县华梁路18号
Addr: No. 18 Hualiang Road, Lankao County, Kaifeng City, Henan Province, China

全国服务电话 Service Hotline (Cn): 400-0378-518
WhatsApp / WeChat: +86 198 3688 8398
Email: sales@scinlea.com

国内Cn：www.scinlea.cn | 国际En：www.scinlea.com

微信视频号 WeChat Channels
抖音 Douyin