WATSOND
MARINE CRANES



Marine & Port Equipment

WATSOND GROUP

Cranes and deck machinery for vessels.
Cargo handling equipment for ports and terminals.



About us

WATSOND Group supplies marine cranes, deck machinery and cargo handling equipment for ports and terminals.

Marine cranes

Shipboard and offshore lifting equipment.

Deck machinery

Anchor windlasses, mooring winches and ship-positioning winches.

Port equipment

Quayside cranes, ship loaders, stockyard machines and conveyors.

Equipment and applications

04–09 **Crane selection**

Foldable, stiff, telescopic and heavy-duty knuckle booms. Hose-handling cranes for bunkering vessels.

10–19 **Marine crane projects**

Heavy lifting, offshore wind, shipyards and cargo handling.

20–22 **Crane reference register**

Vessels, crane duties and inspection records by date.

23–29 **Anchoring and mooring**

Windlasses, winches and capstans on ships and floating docks.

30–37 **Port equipment**

Quayside cranes, ship loaders, stacker-reclaimers and conveyors.

38–40 **Inspection, service and contact**

Inspection records, surface protection, spare parts and sales enquiries.

Contents

Foldable knuckle-boom cranes

An articulated boom folds for stowage on a working deck.

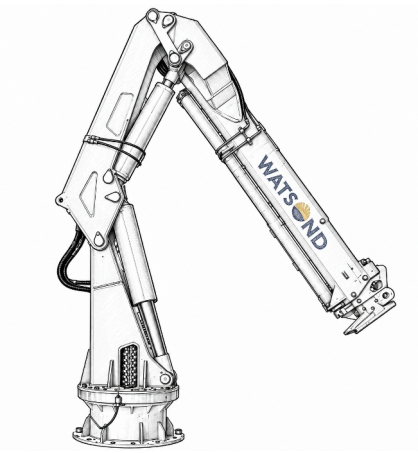

Illustrated model

WH-KT 2300

23 kNm

Lifting moment

Model	Moment (kNm)	Hydr. reach (m)	Pressure (bar)	Weight (kg)
WH-KT 2300	23	4.1	185	230
WH-KT 4501	40	11.1	300	523
WH-KT 6500	56.9	9.6	315	553
WH-KT 8000	84.4	7.0	270	680
WH-KT 8501	74.0	14.0	310	790
WH-KT 11001	95.0	14.2	310	880
WH-KT 12000	113.8	14.6	300	970
WH-KT 15500	143.2	14.5	300	1160

High-capacity folding cranes

An extending outer boom increases the working reach.

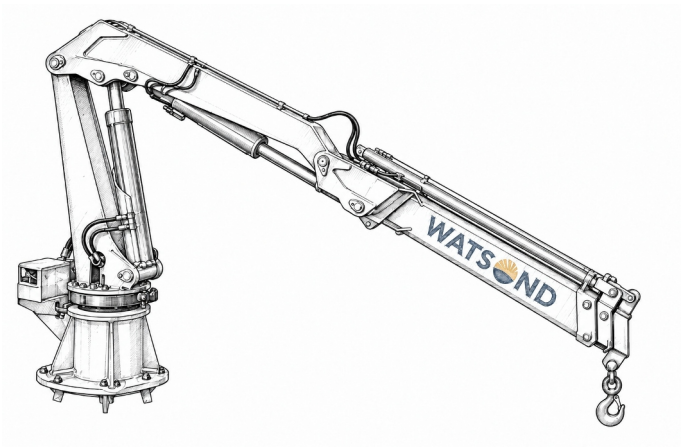

Illustrated model

WH-KT 50002

477.7 kNm

Lifting moment

Model	Moment (kNm)	Hydr. reach (m)	Pressure (bar)	Weight (kg)
WH-KT 18500	177	14.6	300	1810
WH-KT 23500	221	16.7	300	1960
WH-KT 32002	309	20.6	300	2875
WH-KT 40002	375.7	20.6	300	3180
WH-KT 50002	477.7	20.5	300	4427
WH-K 65002	602.3	20.5	300	4815
WH-KT 90002	824	22.0	330	8800
WH-KT 150002	1146	21.5	330	7060

Stiff-boom cranes

A fixed-length boom handles deck lifts at the working radius shown.

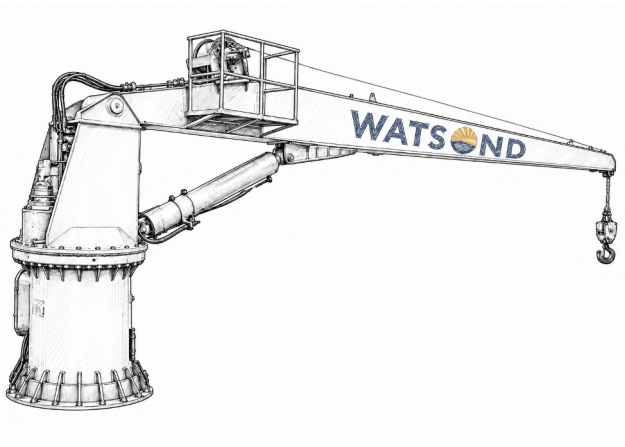

Illustrated model

WH-S 190

180 kNm

Lifting moment

Model	Moment (kNm)	Outreach (m)	SWL (kg)	Weight (kg)
WH-S 190	180	6.0	3000	2310
WH-S 330	336	6.0	5600	3100
WH-S 580	576	6.0	9600	4180
WH-S 850	852	6.0	14200	6100
WH-S 1130	1140	6.0	19000	9400
WH-S 1700	1766	6.0	30000	13500

Telescopic-boom cranes

The boom extends to reach loads at different distances from the pedestal.

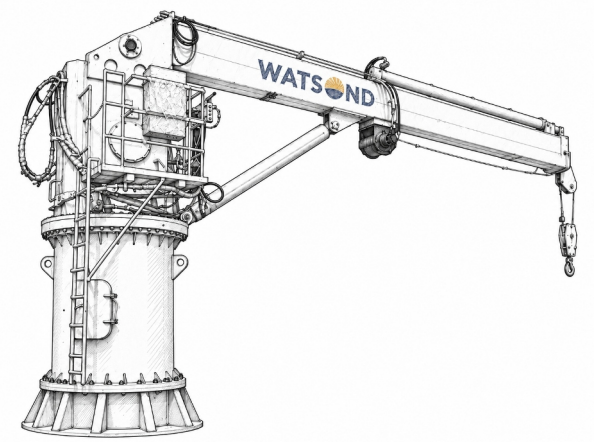

Illustrated model

WH-T 190

198 kNm

Lifting moment

Model	Moment (kNm)	Outreach (m)	SWL (kg)	Weight (kg)
WH-T 190	198	6.0	3300	2770
WH-T 330	330	6.0	5300	3680
WH-T 580	525	6.0	7700	4960
WH-T 850	842	6.0	10000	7800
WH-T 1130	1190	6.0	12000	11500
WH-T 1700	1800	6.0	12000	19200

Heavy-duty knuckle-boom cranes

Articulated cranes for offshore work on engineering vessels and trawlers.



Illustrated model

WH-K 120

117.7 kNm

Lifting moment

Model	Moment (kNm)	Outreach (m)	SWL (kg)	Weight (kg)
WH-K 120	117.7	8.2	1500	2340
WH-K 200	196.2	10.0	2000	3200
WH-K 270	265.0	10.0	2600	3200
WH-K 360	353.2	12.0	3000	4700
WH-K 480	470.9	12.0	4000	4700
WH-K 520	510.1	13.0	4000	6470
WH-K 650	637.6	13.0	5000	6470
WH-K 700	676.9	15.0	4600	11260
WH-K 910	882.9	15.0	6000	11260
WH-K 1200	1200	16.0	7500	14100

Hose-handling crane

Hydraulic deck equipment

A hydraulic crane lifts and positions bunker hoses on deck.



2 t
Safe working load

7–25 m
Working radius

30 m
Lifting height

Operating data	Value
Hoisting speed	Approx. 20 m/min
Slewing angle and speed	300° / approx. 0.5 rpm
Motor and power supply	37 kW / 380 V / 50 Hz
Hull	JL0260T

Product inspection / ClassNK

FE22SC01764 · 5 August 2022 · 1 unit

Model 2T-25M HYDRAULIC OIL TUBE CRANE

Serial No. 2207188

Jian Shen

Vessel-mounted heavy-lift crane



Purchaser

Shanghai Tongsheng Construction Engineering Company, Ltd.

Model

242JN3500-00

Heavy-lift crane

Jian Shen / 242JN3500-00

Main hooks I + II have separate ratings for fixed stern lifting and full slewing.

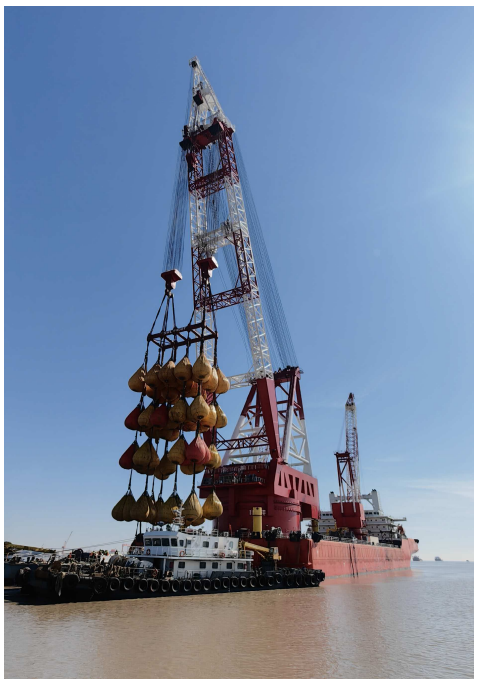

3,500 t

Fixed stern lift

Working radius 38–42 m

3,200 t

Full slewing

Working radius 38–42 m

Hook	Load at working radius
Main hook III	1,000 t at 41.7–53.2 m
Auxiliary	300 t at 46.6–57.9 m

Certificate of Marine Product

China Classification Society

JY22PPS03073

16 April 2025

Serial number

2203059

Certified quantity

1 unit

Qiang Shen 1

Self-elevating offshore wind platform

A 165 t electric crane surrounds a platform leg for lifting work on deck.



Purchaser

Shanghai Tongsheng Construction Engineering Co., Ltd.

Technical data	Value
Main hook	165 t at 17.5 m / 40 t at 50 m
Auxiliary hook	10 t at 54 m
Hoisting height	68 m above / 12 m below deck
Slewing angle	360°

Product inspection / CCS

JY20PPS01100 · 21 April 2021 · 1 unit

Model 242JN165-00SM

Serial No. 2102083

Heng Tong Yi Hang

Full-slewing offshore crane

The main hook lifts 650 t at working radii from 25 to 30 m. An auxiliary hook serves lifts up to 120 t.



Purchaser

Hengtong Offshore Engineering Co., Ltd.

Technical data	Value
Main hook	650 t at 25–30 m / 80 t at 25–90 m
Auxiliary hook	120 t at 30–75 m
Main hoist height	115 m above / 15 m below water
Luffing time	864 s

Product inspection / CCS

JY20PPS01923 · 13 July 2021 · 1 unit

Model 242JN650-00SM

Serial No. 2106099

VB0029A

Floating dock with 22,000 t lifting capacity

Two portal cranes serve the floating dock. Each lifts 21 t at 10 m and 10 t at 25 m.



Shipyard

Huarun Dadong Dockyard Co., Ltd.

Technical data	Value
Rated duties	21 t at 10 m / 10 t at 25 m
Dynamic test	1.1 × SWL
Static test	1.25 × SWL
Final inspection	20 January 2026

Product inspection / LR

JJG2505075 · 20 January 2026 · 2 units

Model 202502-FW

Serial No. 2508071 / 2508072

JL0211(D)

Floating dock with 35,000 t lifting capacity

A 30 t portal crane serves the floating dock. Its auxiliary hook handles 10 t out to 34.3 m.



Shipyard

Penglai Zhongbai Jinglu Ship Industry Co., Ltd.

Technical data	Value
Main hook	30 t at 10–31 m
Auxiliary hook	10 t at 11.6–34.3 m
Hoisting height	30 m above / 20 m below deck
Main hoist speed	10 m/min loaded / 20 m/min unloaded

Product inspection / CCS

JY25PPS02854 · 5 September 2026 · 1 unit

Model 202412-FW01

Serial No. 2508041

Keppel, Singapore

Fixed floating dock crane

Lifting equipment for floating dock operations in Singapore.



Lifting capacity	Working radius
15 t	37 m

PRM, Singapore

Fixed floating dock crane

Lifting equipment for floating dock operations in Singapore.



Lifting capacity	Working radius
25 t	41 m

Algeria

Electric grab cranes for cargo handling

Two electric grab cranes handle cargo at working radii from 6 to 36 m.



Purchaser

Maistuo International Ship Development (Taizhou) Co., Ltd.

Technical data	Value
Rated load	35 t
Working radius	6–36 m
Hoisting height	30 m
Hoisting speed	40 m/min loaded / 70 m/min unloaded

Product inspection / BV

21308CHN24 · 17 July 2024 · 2 units

Model 242JN35/36-00SM

Serial No. 2403030 / 2403031

Maritime Amber

Full-rotation electric crane

The main hook handles 90 t at radii up to 35 m. Separate auxiliary-hook duties apply to cargo and personnel.



Agreement Party

PaxOcean / PT. Graha Trisaka Industri

Technical data	Value
Main hook	90 t at 11–35 m / 15 t at 11–45 m
Auxiliary hook, cargo	5 t at 12.7–50.2 m
Auxiliary hook, personnel	2 t at 12.7–50.2 m
Design temperature	−10 °C

Survey report / ABS

7228719-A / 7228719-B · 14 March 2026 · 1 unit

Model 242JN90/35-00

Serial No. 2508081

Crane reference register

2017–2022

Date	Equipment / vessel	Inspection record
2017-12-21	**6 t / 24 m + 2 t / 27 m Hydraulic Slewing Crane** 242JN6/27HC-00	**CCS** JY17P02185
2019-05-23	**5 t / 15 m + 3 t / 25 m Hydraulic Slewing Crane** 242JN0515/0325HC.00	**CCS** JY19PPS00189_02
2020-08-16	**5 t / 15 m + 3 t / 25 m Hydraulic Slewing Crane** Yangjiang Phase II 242JN0515/0325HC.00	**CCS** JY20PPS01101
2020-08-16	**5 t / 30 m Electro-hydraulic Slewing Crane** Offshore Substation Topside Module Project 242JN05/30HC.00	**CCS** JY20PPS01102
2021-04-21	**165 t Leg-encircling Electric Crane** QIANG SHEN 1 242JN165-00SM	**CCS** JY20PPS01100
2021-07-13	**650 t Full-slewing Crane** HENG TONG YI HANG 242JN650-00SM	**CCS** JY20PPS01923
2021-08-04	**6 t / 24 m Electro-hydraulic Slewing Crane** Shanghai Haiwan New Energy Fengxian Offshore Wind Project 242JN06/24HC.00	**CCS** JY21PPS01552
2022-08-05	**2 t / 25 m Hydraulic Oil Tube Crane** Ship No. JL0260T 2T-25M HYDRAULIC OIL TUBE CRANE	**ClassNK** FE22SC01764
2022-09-04	**10 t / 31 m Floating Dock Portal Crane** 35,000 t lifting-capacity floating dock / JL0211(D) 202012-FW02	**CCS** JY21PPS03516_02
2022-09-04	**15 t / 31 m Floating Dock Portal Crane** 35,000 t lifting-capacity floating dock / JL0211(D) 202012-FW01	**CCS** JY21PPS03516_01

Crane reference register

2022–2024

Date	Equipment / vessel	Inspection record
2022-09-04	**50 t Hydraulic Deck Crane** 98 m Cable-laying Vessel / DY098 242JN50/35-00	**CCS** JY21PPS03514
2022-12-06	**10 t / 20 m Hydraulic Hose Crane** XY051 / BV Register 38079S 242JN10/20HC	**BV** 21336CHN22-1
2023-04-12	**25 t / 16 m Hydraulic Knuckle-boom Crane** 63 m tugboat 242JN25/16ZHC.00	**CCS** JY23PPS00140
2023-04-28	**20 t / 20 m Hydraulic Slewing Crane** 242JN20/20.00	**CCS** JY21PPS03511
2023-09-21	**600 t Class Heavy-lift Slewing Crane** QIANG SHEN 2 242JN600-00	**CCS** JY22PPS01789
2024-06-07	**30 t / 30 m + 10 t / 35 m Hydraulic Deck Crane** 79.8 m Cable-laying Vessel / YH-330 242JN30/35-00	**CCS** JY23PPS03363
2024-06-13	**400 kN Gantry Crane** 79.8 m Cable-laying Vessel / YH-330 242JN400-00	**CCS** JY23PPS03364
2024-07-17	**35 t / 36 m Electric Grab Crane** ALGERIA 242JN35/36-00SM	**BV** 21308CHN24
2024-08-29	**20 t Gantry Crane** 23102-007 242JN20/12-00	**CCS** JY24PPS01552
2024-10-10	**35 t / 36 m Electric Grab Crane** RI95315 - EVRIKA 242JN35/36-00SM	**RINA** 24/WS/01/2355/1

Crane reference register

2024–2026

Date	Equipment / vessel	Inspection record
2024-11-13	**30 t Gantry Crane** Floating Dock / 23102-007 242JN30/12-00	**CCS** JY24PPS03173
2024-11-28	**30 t / 30 m Electric Deck Crane** FU XING LUN / HT2023-01 242JN30/30-00	**CCS** JY24PPS03097
2024-12-05	**15 t / 25 m Electro-hydraulic Crane** CC TAIZHOU / SAM23001 242JN15/25HC-00	**CCS** JY24PPS03407_02
2025-02-12	**50 t Full-slewing Crane** JIAN SHEN 242JN50/35-00	**CCS** JY23PPS01426
2025-04-16	**3500 t Class Heavy-lift Slewing Crane** JIAN SHEN 242JN3500-00	**CCS** JY22PPS03073
2025-04-22	**500 kN Gantry Crane** ZHONG TIAN HAI YANG 69 Workboat 242JN500-00	**CCS** JY25PPS00791
2026-01-20	**21 t / 10 m + 10 t / 25 m Dock Portal Crane** VB0029A 202502-FW	**LR** JJG2505075
2026-03-14	**90 t Full-rotation Electric Crane** MARITIME AMBER / Class No. 15256336 242JN90/35-00	**ABS** 7228719-A / 7228719-B
2026-09-05	**30 t / 31 m Floating Dock Portal Crane** 35,000 t lifting-capacity floating dock / JL0211(D) 202412-FW01	**CCS** JY25PPS02854

Anchoring & mooring

Windlasses recover anchor chain. Mooring winches and capstans handle lines aboard ships and floating docks.

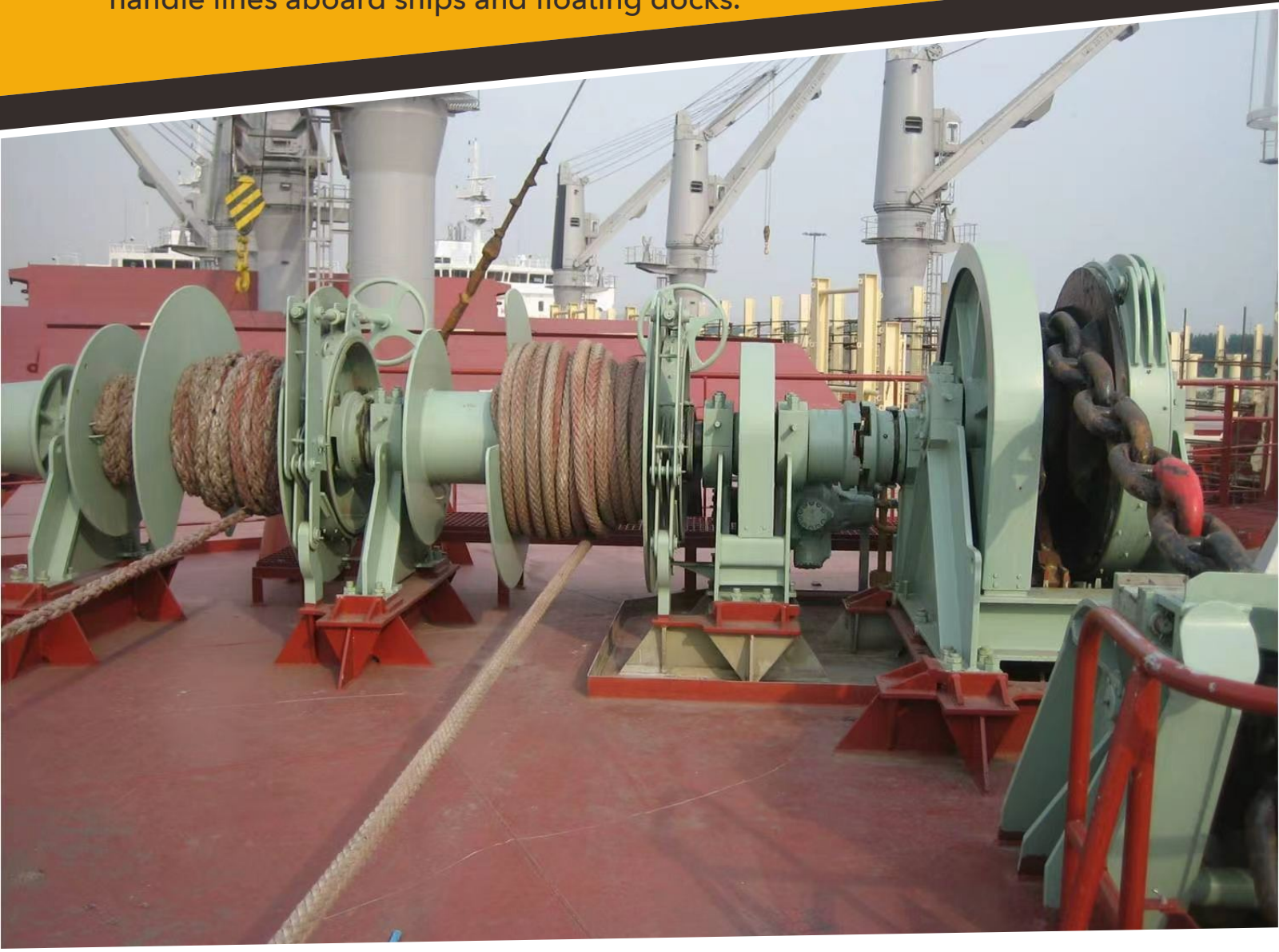

Electric windlass and mooring winch for 84 mm chain

Electric anchor windlass

AH0045AL / 86,000 DWT bulk carrier

Two combined electric windlasses and mooring winches serve the bulk carrier. Each windlass handles 84 mm grade AM3 chain.



Shipyard

Qingdao Beihai Shipbuilding Heavy Industry Co., Ltd.

Technical data	Value
Working pull / overload pull	335.2 kN / 502.8 kN
Chain holding load	2,322 kN
Nominal hoisting speed	≥9 m/min
Mooring drum load / holding load	200 kN / 604 kN

Product inspection / CCS

JY19PPS01614_01 · 18 July 2019 · 2 units

Model 226JN84D-00

Serial No. 1907007-1907008

Electric mooring winch

AH0045AL / 86,000 DWT bulk carrier

Four electric mooring winches handle lines on the same bulk carrier. Each drum carries 250 m of rope.



Shipyard

Qingdao Beihai Shipbuilding Heavy Industry Co., Ltd.

Technical data	Value
Drum load / holding load	200 kN / 604 kN
Drum diameter	571 mm
Mooring speed	15 m/min
Motor power	75 kW

Product inspection / CCS

JY19PPS01614_02 · 18 July 2019 · 4 units

Model 227JN200D-00

Serial No. 1907009-1907012

Ship-moving winch

23102-007 / Special-purpose floating dock

Two variable-frequency electric winches move vessels into position at the floating dock.



Shipyard

CSSC Guangxi Shipbuilding Co., Ltd.

Technical data	Value
Drum load / holding load	700 kN / 2,100 kN
Rope capacity / diameter	650 m / 64 mm
Drum diameter	850 mm
Line speed	0–9 m/min on first layer / 0–18 m/min at 200 kN

Product inspection / CCS

JY24PPS01554_01 · 18 July 2024 · 2 units

Model 227JN700D-00

Serial No. 2403017 / 2403018

Electric capstan

23102-007 / Special-purpose floating dock

Eight electric capstans handle steel wire mooring lines on the floating dock.



Shipyard

CSSC Guangxi Shipbuilding Co., Ltd.

Technical data	Value
Mooring load	50 kN
Speed at rated load	0–15 m/min
Speed at light load	0–30 m/min
Warping end / wire rope diameter	420 mm / 26 mm

Product inspection / CCS

JY24PPS01553 · 18 July 2024 · 8 units

Model 223JN50D-00

Serial No. 2403021-2403028

Hydraulic anchor windlass

HT0203 / 11,500 DWT stainless-steel chemical tanker

Two hydraulic windlass and mooring winch units handle 52 mm grade AM3 anchor chain and mooring lines.



Shipyard

Chongqing Chuandong Shipbuilding Industry Co., Ltd.

Technical data	Value
Working pull / overload pull	128.5 kN / 193 kN
Nominal hoisting speed	≥9 m/min
Mooring drum load / holding load	100 kN / 310 kN
Rope capacity / diameter	220 m / 44 mm

Product inspection / CCS

JY24PPS02931 · 14 November 2024 · 2 units

Model 226JN52Y-00

Serial No. 2409051 / 2409052

Hydraulic mooring winch

HT0203 / 11,500 DWT stainless-steel chemical tanker

Two hydraulic winches handle mooring lines on the tanker. Each drum holds 220 m of 44 mm rope.



Shipyard

Chongqing Chuandong Shipbuilding Industry Co., Ltd.

Technical data	Value
Drum load / holding load	100 kN / 310 kN
Drum diameter	900 mm
Mooring speed	15 m/min
Rope diameter	44 mm

Product inspection / CCS

JY24PPS02933 · 14 November 2024 · 2 units

Model 227JN100Y-00

Serial No. 2409053 / 2409054

Quayside handling

Quayside portal and fixed cranes



Port portal crane

The slewing crane travels on rails along the quay to handle bulk and general cargo at seaports and inland terminals.

Attachments

Hook, grab or container spreader



Portal crane with hopper

A grab discharges bulk material into a hopper on the portal. A belt conveyor carries the material away from the crane.

Transfer system

Telescopic hopper and belt conveyor



Fixed pedestal crane

Mounted on a fixed foundation or pedestal for cargo handling at river terminals, grain depots and loading stations.

Attachments

Hook or grab

Docks and slipways

Shipyard lifting



Shipyard portal crane

A single-jib crane for hull block assembly and machinery installation. Two or more hooks can operate under load.

Series lifting capacity	5–150 t
Maximum working radius	100 m



Shipbuilding gantry crane

Upper and lower trolleys work independently or in tandem to lift and turn hull blocks over a dock or slipway.

Tandem lifting capacity	100–2,500 t
Block turning capacity	60–1,500 t
Span	≥ 40 m

Container and bulk terminals

Ship-to-shore cargo handling



Ship-to-shore container crane

Transfers containers between ship and quay. Rope-towed or self-propelled trolleys are available with mechanical or electronic anti-sway and snag protection.

Rated capacity options

30.5 t / 35 t / 40.5 t

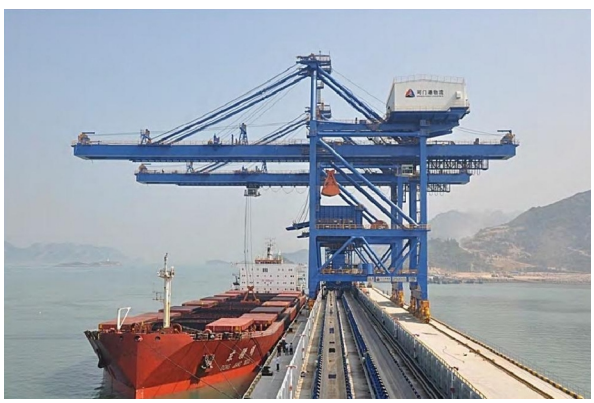

Quayside handling bridge

A travelling bridge at the quay edge loads or unloads vessels. A grab handles loose bulk cargo, while other attachments suit different loads.

Attachments

Hook, grab or lifting magnet

Rail-mounted handling

Yard and workshop cranes



General-purpose gantry crane

Travels on ground-level rails in cargo yards. Single- and double-girder versions are available. The main girder can extend beyond the legs where the site allows.

Single-girder selection criteria

Capacity ≤ 50 t and span ≤ 35 m



Overhead travelling crane

The bridge travels on elevated runways on either side of a workshop, warehouse or storage area, carrying loads above the equipment on the floor.

Travel arrangement

Elevated runways on both sides

Container yard equipment

Rubber-tyred container gantry crane

Yard and workshop lifting

Mobile cranes and jib cranes



Wheeled mobile crane

The slewing crane moves between lifts on a wheeled chassis. Extendable outriggers support the machine during lifting.

Support

Four extendable outriggers



Crawler crane

A crawler undercarriage suits work on poor ground where the crane moves short distances between lifts.

Undercarriage

Crawler tracks



Slewing jib crane

Handles short lifts at production or maintenance stations. The hoist sits at the jib tip or travels along the jib on a trolley.

Jib movement

Slewing, without luffing

Quay to ship

Bulk and cement ship loading

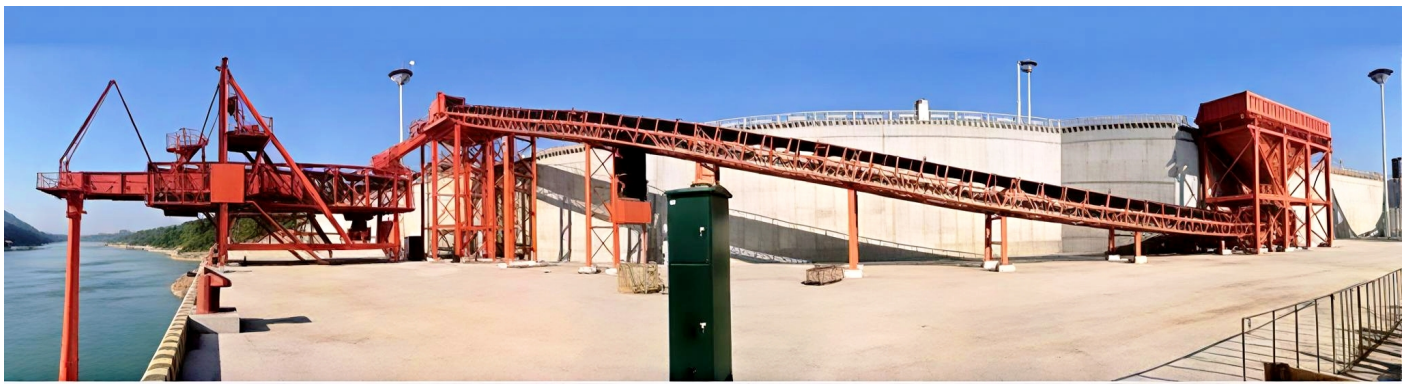

Radial ship loader

A feed conveyor delivers material at the rear pivot. A boom conveyor and telescopic chute feed the hold. Travel along a curved rail and boom extension position the chute across the hatch.

Loading system

Curved rail, telescopic boom and chute



Pneumatic cement ship loader

A sealed pneumatic pipeline transfers bulk cement into a cement carrier and meters the quantity loaded.

Material handled

Bulk cement

Ship to stockyard

Bulk unloading and stockpiling

Grab ship unloader



The suspended grab lifts loose bulk material out of the hold and transfers it to the discharge point on the quay.

Material pickup

Suspended grab

Bucket-wheel stacker-reclaimer



Stacks and reclaims coal, iron ore and sand in bulk stockyards. Conventional or PLC controls support semi-automatic or automatic operation.

Series handling rate

1,500–3,000 t/h

Terminal systems

Conveying and control systems



Belt conveyor

A continuously moving belt carries material between transfer points at ports and on bulk handling lines.

Conveying method

Continuous belt



Hydraulic power unit

An electric motor drives the pump. The reservoir and valve assembly supply hydraulic power or lubrication to machinery.

Valve functions

Directional, throttle and relief valves

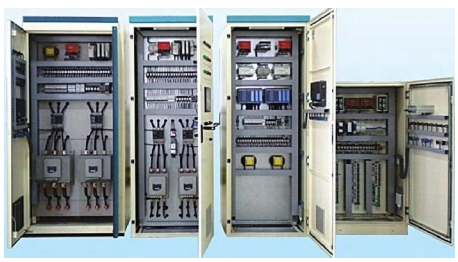

Electrical controls

Low-voltage switchgear, relays and programmable controllers operate the equipment, with speed control for DC or AC motors.

Controller

Programmable logic controller (PLC)

Deck machinery inspection

ClassNK / Hydraulic deck machinery

Hydraulic windlass

Certificate number

FE10SC02114-01

Inspected quantity	**2 units**
Chain diameter	**50 mm**

Hydraulic mooring winch

Certificate number

FE10SC02114-02

Inspected quantity	**3 units**
Cable diameter	**50 mm**

Yangzhou Kejin Shipyard Co., Ltd.

Hull number	**KJ-08090**
Certificate issue date	**26 December 2010**

Finishing and after-sales

Surface protection and service for WATSOND marine cranes.

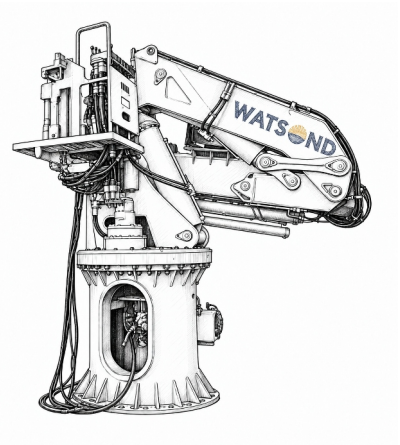

Marine paint system

210 µm

Minimum total dry film thickness

Steel preparation and coating	Requirement
Steel preparation	Grit blasting to Sa 2½
First coat	Minimum 40 µm
Intermediate coat	Minimum 110 µm
Finish coat	Minimum 60 µm

Inspection

After painting, the coating is inspected for surface defects and its thickness is measured with a probe.

Parts and retrofit support

Replacement parts and retrofit kits are available for older crane models. For parts enquiries, contact the marine equipment team in Wuxi.

Contact

China Watsond Technology Group Co., Ltd.

No. 22 Fuyang Road Industrial Park, Yangjian Town, Wuxi City, China

Telephone

+86 150 6151 0777

Email

chen@watsond.cn

Website

www.marinecranes.cn

WATSOND GROUP