转向驱动桥
Steering drive axle

205-1270

产品优势

- 产品已系列化、标准化、模块儿化，能快速满足客户的定制需求
- 采用多片湿式制动器，制动扭矩大
- 湿式防爆制动器
- 可选装

★ 轮辐距、轮辋安装尺寸、速比
★ 车架连接方式：刚性连接、摆座连接、顶置摆轴连接
★ 传感器：转角传感器、速度传感器、中位传感器
★ 制动类型：湿式多片制动、干式钳盘制动
★ 差速类型：普通差速器、限滑差速器、差速锁
★ 转向角：25°— 45°

应用范围

- 挖掘装载机、轮式挖掘机、轮式装载机 、伸缩臂叉装车 、凿岩台车、湿喷台车、收获机械 、拖拉机

Product Advantages

- With a full line, Standardized and modular axle design, for quickly meet customized demands
- Wet multi-disc for Increased brake torque capacity
- Wet multi-disc brakes for anti explosion(SAHR).
- Options

★ Flange to flange distance, Wheel mounting dimension, Total ratio
★ Frame MTG: Rigid with pads, Centre oscillation, Offset oscillation
★ Sensor：Steering sensor, Speed sensor, Middle position sensor
★ Brake：Wet multi-disc，Dry disc
★ Differential: Open differential, Limited slip differential, Mechanical diff. lock
★ Steering Angle 25°— 45°

Range Of Applications

- Backhoe loaders、Wheel excavators、Wheel loaders、Telescopic handlers、Rock drilling jumper、Wet spray jumper、Harvesting machines、Tractors

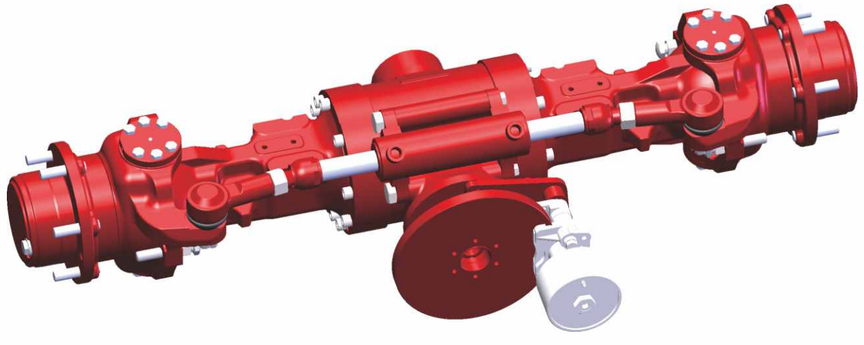

转向驱动桥
Steering drive axle

205-1270

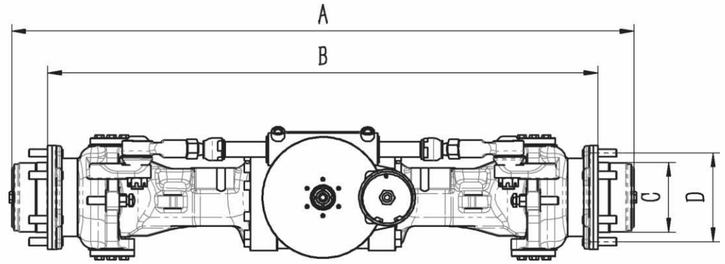

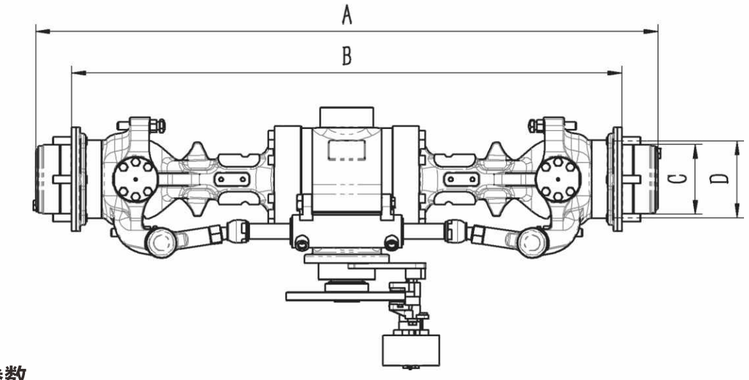

技术参数
Technical Parameter

整桥速比	Total Ratio	13.335 / 11.54 / 13.85 / 16
桥总长-A	Planetary Hub Length (mm)	1436 / 1497
轮辐距-B	Flange to Flang (mm)	1270
轮毂安装直径-C	Wheel Pilot Diameter (mm)	Φ160.8h11
轮毂螺栓分度圆直径-D	Wheel Bolt Circle Diameter (mm)	205 / 275
动态载荷	Dynamic Load (kg)	5000
最大输出扭矩	Max. Output Touque (N.m)	/

洛阳汇鹏重工机械有限公司
LUOYANG HUIPENG HEAVY INDUSTRIES MECHINERY CO., LTD
地址：洛阳市孟津区麻屯镇金水大道246号
电话：13526947669　网址：www.lyhuipeng.cn

转向驱动桥
Steering drive axle

205-1270

产品优势

- 产品已系列化、标准化、模块儿化，能快速满足客户的定制需求
- 采用多片湿式制动器，制动扭矩大
- 湿式防爆制动器
- 可选装

★ 轮辐距、轮辋安装尺寸、速比
★ 车架连接方式：刚性连接、摆座连接、顶置摆轴连接
★ 传感器：转角传感器、速度传感器、中位传感器
★ 制动类型：湿式多片制动、干式钳盘制动
★ 差速类型：普通差速器、限滑差速器、差速锁
★ 转向角：25°— 45°

应用范围

- 挖掘装载机、轮式挖掘机、轮式装载机 、伸缩臂叉装车 、凿岩台车、湿喷台车、收获机械 、拖拉机

Product Advantages

- With a full line, Standardized and modular axle design, for quickly meet customized demands
- Wet multi-disc for Increased brake torque capacity
- Wet multi-disc brakes for anti explosion(SAHR).
- Options

★ Flange to flange distance, Wheel mounting dimension, Total ratio
★ Frame MTG: Rigid with pads, Centre oscillation, Offset oscillation
★ Sensor：Steering sensor, Speed sensor, Middle position sensor
★ Brake：Wet multi-disc，Dry disc
★ Differential: Open differential, Limited slip differential, Mechanical diff. lock
★ Steering Angle 25°— 45°

Range Of Applications

- Backhoe loaders、Wheel excavators、Wheel loaders、Telescopic handlers、Rock drilling jumper、Wet spray jumper、Harvesting machines、Tractors

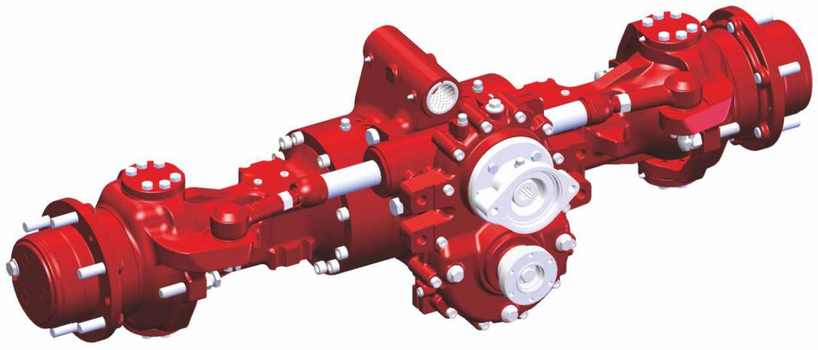

转向驱动桥
Steering drive axle

205-1270

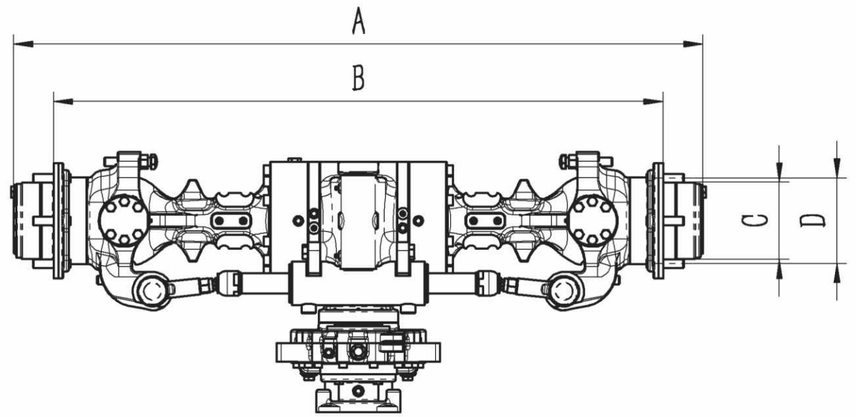

技术参数
Technical Parameter

整桥速比	Total Ratio	26.176 / 22.653 / 21.188 / 31.408
桥总长-A	Planetary Hub Length (mm)	1436 / 1497
轮辐距-B	Flange to Flang (mm)	1270
轮毂安装直径-C	Wheel Pilot Diameter (mm)	Φ160.8h11 / Φ220.8h11
轮毂螺栓分度圆直径-D	Wheel Bolt Circle Diameter (mm)	205 / 275
动态载荷	Dynamic Load (kg)	5500
最大输出扭矩	Max. Output Touque (N.m)	/

洛阳汇鹏重工机械有限公司
LUOYANG HUIPENG HEAVY INDUSTRIES MECHINERY CO., LTD
地址：洛阳市孟津区麻屯镇金水大道246号
电话：13526947669　网址：www.lyhuipeng.cn

转向驱动桥
Steering drive axle

275-1060

产品优势

- 产品已系列化、标准化、模块儿化，能快速满足客户的定制需求
- 采用多片湿式制动器，制动扭矩大
- 湿式防爆制动器
- 可选装

★ 轮辐距、轮辋安装尺寸、速比
★ 车架连接方式：刚性连接、摆座连接、顶置摆轴连接
★ 传感器：转角传感器、速度传感器、中位传感器
★ 制动类型：湿式多片制动、干式钳盘制动
★ 差速类型：普通差速器、限滑差速器、差速锁
★ 转向角：最大25°

应用范围

- 挖掘装载机、轮式挖掘机、轮式装载机 、伸缩臂叉装车 、凿岩台车、湿喷台车、收获机械 、拖拉机

Product Advantages

- With a full line, Standardized and modular axle design, for quickly meet customized demands
- Wet multi-disc for Increased brake torque capacity
- Wet multi-disc brakes for anti explosion(SAHR).
- Options

★ Flange to flange distance, Wheel mounting dimension, Total ratio
★ Frame MTG: Rigid with pads, Centre oscillation, Offset oscillation
★ Sensor：Steering sensor, Speed sensor, Middle position sensor
★ Brake：Wet multi-disc，Dry disc
★ Differential: Open differential, Limited slip differential, Mechanical diff. lock
★ Steering Angle Max 25°

Range Of Applications

- Backhoe loaders、Wheel excavators、Wheel loaders、Telescopic handlers、Rock drilling jumper、Wet spray jumper、Harvesting machines、Tractors

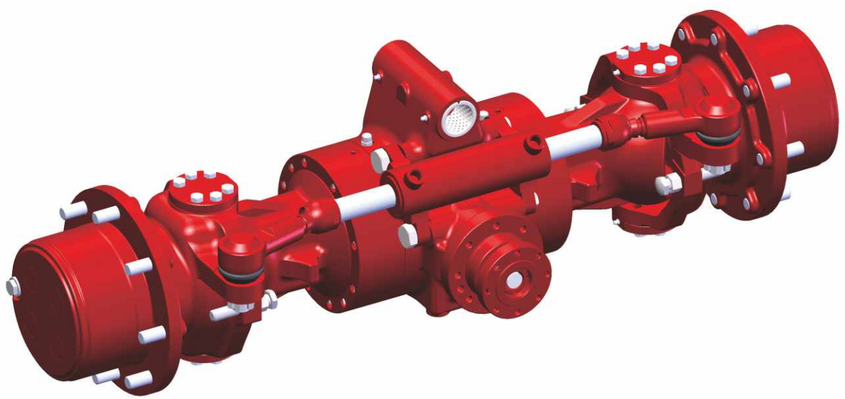

转向驱动桥
Steering drive axle

275-1060

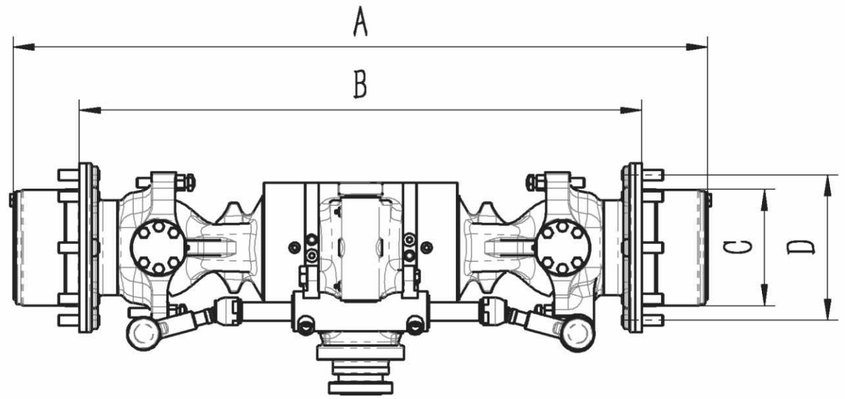

技术参数
Technical Parameter

整桥速比	Total Ratio	13.335 / 11.54 / 13.85/16
桥总长-A	Planetary Hub Length (mm)	1226 / 1287
轮辐距-B	Flange to Flang (mm)	1060
轮毂安装直径-C	Wheel Pilot Diameter (mm)	Φ160.8h11 / Φ220.8h11
轮毂螺栓分度圆直径-D	Wheel Bolt Circle Diameter (mm)	205 / 275
动态载荷	Dynamic Load (kg)	5500
最大输出扭矩	Max. Output Touque (N.m)	/

洛阳汇鹏重工机械有限公司
LUOYANG HUIPENG HEAVY INDUSTRIES MECHINERY CO., LTD
地址：洛阳市孟津区麻屯镇金水大道246号
电话：13526947669　网址：www.lyhuipeng.cn

刚性驱动桥
Rigid drive axle

275-1060

产品优势

- 产品已系列化、标准化、模块儿化，能快速满足客户的定制需求
- 采用多片湿式制动器，制动扭矩大
- 湿式防爆制动器
- 可选装
- ★ 轮辐距、轮辋安装尺寸、速比
- ★ 车架连接方式：刚性连接，摆座连接，顶置摆轴连接
- ★ 制动类型：湿式多片制动，干式钳盘制动
- ★ 差速类型：普通差速器，限滑差速器，差速锁

应用范围

- 挖掘装载机、轮式挖掘机、轮式装载机 、伸缩臂叉装车 、凿岩台车、湿喷台车、收获机械 、拖拉机

Product Advantages

- With a full line, Standardized and modular axle design, for quickly meet customized demands
- Wet multi-disc for Increased brake torque capacity
- Wet multi-disc brakes for anti explosion(SAHR)
- Options
- ★ Flange to flange distance, Wheel mounting dimension, Total ratio
- ★ Frame MTG: Rigid with pads, Centre oscillation, Offset oscillation
- ★ Brake：Wet multi-disc，Dry disc
- ★ Differential: Open differential, Limited slip differential, Mechanical diff. lock

Range Of Applications

- Backhoe loaders、Wheel excavators、Wheel loaders、Telescopic handlers、Rock drilling jumper、Wet spray jumper、Harvesting machines、Tractors

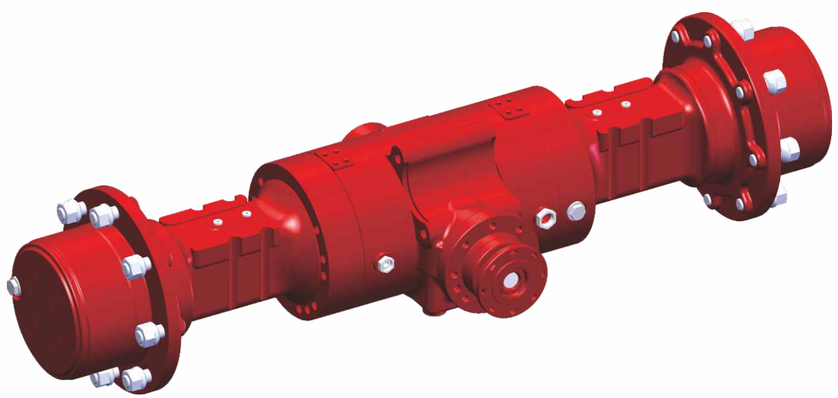

刚性驱动桥
Rigid drive axle

275-1060

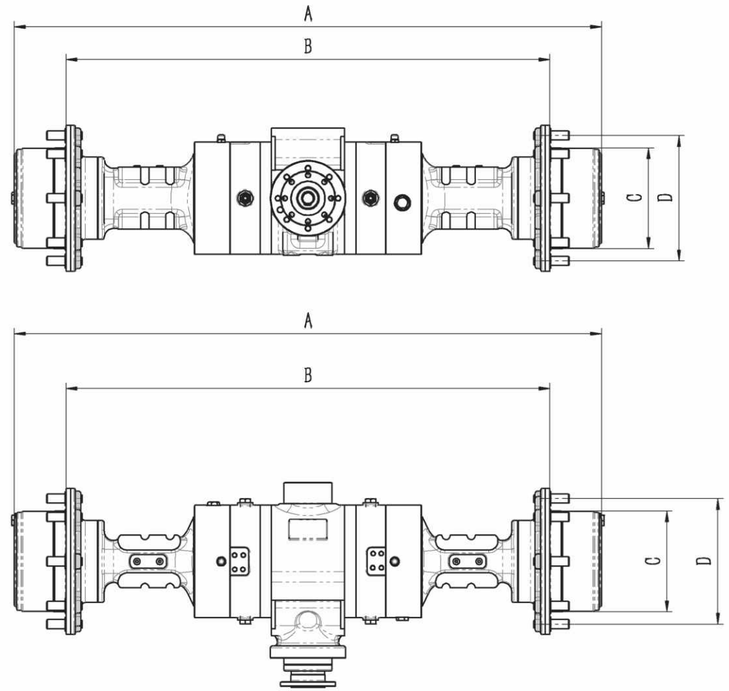

技术参数
Technical Parameter

整桥速比	Total Ratio	13.335 / 11.54 / 13.85 / 16
桥总长-A	Planetary Hub Length (mm)	1226 / 1287
轮辐距-B	Flange to Flang (mm)	1060
轮毂安装直径-C	Wheel Pilot Diameter (mm)	Φ160.8h11 / Φ220.8h11
轮毂螺栓分度圆直径-D	Wheel Bolt Circle Diameter (mm)	205 / 275
动态载荷	Dynamic Load (kg)	5500
最大输出扭矩	Max. Output Touque (N.m)	/

洛阳汇鹏重工机械有限公司
LUOYANG HUIPENG HEAVY INDUSTRIES MECHINERY CO., LTD

地址：洛阳市孟津区麻屯镇金水大道246号
电话：13526947669　网址：www.lyhuipeng.cn

转向驱动桥
Steering drive axle

275-1060

产品优势

- 产品已系列化、标准化、模块儿化，能快速满足客户的定制需求
- 采用多片湿式制动器，制动扭矩大
- 湿式防爆制动器
- 可选装
- ★ 轮辐距、轮辋安装尺寸、速比
- ★ 车架连接方式：刚性连接，摆座连接，顶置摆轴连接
- ★ 制动类型：湿式多片制动，干式钳盘制动
- ★ 差速类型：普通差速器，限滑差速器，差速锁

Product Advantages

- With a full line, Standardized and modular axle design, for quickly meet customized demands
- Wet multi-disc for Increased brake torque capacity
- Wet multi-disc brakes for anti explosion(SAHR)
- Options
- ★ Flange to flange distance, Wheel mounting dimension, Total ratio
- ★ Frame MTG: Rigid with pads, Centre oscillation, Offset oscillation
- ★ Brake：Wet multi-disc，Dry disc
- ★ Differential: Open differential, Limited slip differential, Mechanical diff. lock

应用范围

- 挖掘装载机、轮式挖掘机、轮式装载机 、伸缩臂叉装车 、凿岩台车、湿喷台车、收获机械 、拖拉机

Range Of Applications

- Backhoe loaders、Wheel excavators、Wheel loaders、Telescopic handlers、Rock drilling jumper、Wet spray jumper、Harvesting machines、Tractors

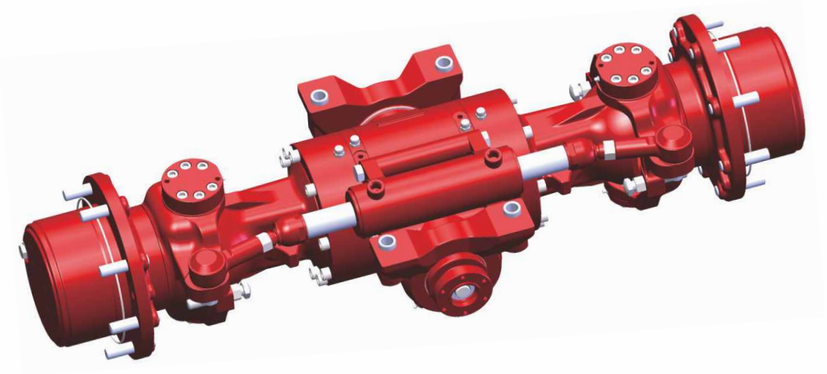

转向驱动桥
Steering drive axle

275-1060

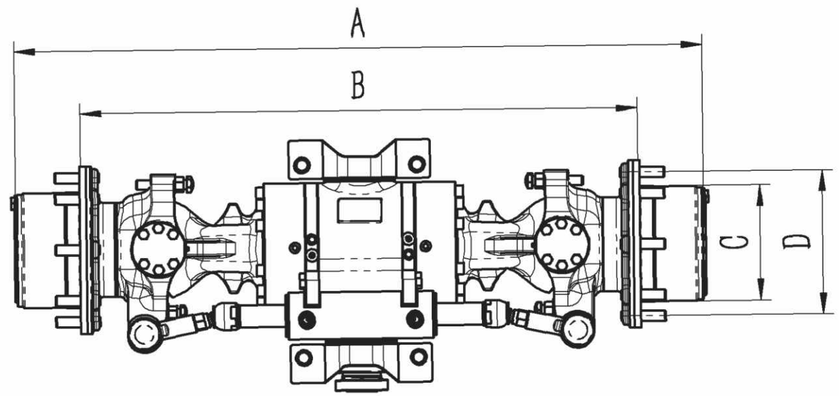

技术参数
Technical Parameter

整桥速比	Total Ratio	13.335 / 11.54 / 13.85 / 16
桥总长-A	Planetary Hub Length (mm)	1226 / 1287
轮辐距-B	Flange to Flang (mm)	1060
轮毂安装直径-C	Wheel Pilot Diameter (mm)	Φ160.8h11 / Φ220.8h11
轮毂螺栓分度圆直径-D	Wheel Bolt Circle Diameter (mm)	205 / 275
动态载荷	Dynamic Load (kg)	5500
最大输出扭矩	Max. Output Touque (N.m)	/

洛阳汇鹏重工机械有限公司
LUOYANG HUIPENG HEAVY INDUSTRIES MECHINERY CO., LTD

地址：洛阳市孟津区麻屯镇金水大道246号
电话：13526947669　网址：www.lyhuipeng.cn

刚性驱动桥
Rigid drive axle

275-1270

产品优势

- 产品已系列化、标准化、模块儿化，能快速满足客户的定制需求
- 采用多片湿式制动器，制动扭矩大
- 湿式防爆制动器
- 可选装
- ★ 轮辐距、轮辋安装尺寸、速比
- ★ 车架连接方式：刚性连接，摆座连接，顶置摆轴连接
- ★ 制动类型：湿式多片制动，干式钳盘制动
- ★ 差速类型：普通差速器，限滑差速器，差速锁

应用范围

- 挖掘装载机、轮式挖掘机、轮式装载机 、伸缩臂叉装车 、凿岩台车、湿喷台车、收获机械 、拖拉机

Product Advantages

- With a full line, Standardized and modular axle design, for quickly meet customized demands
- Wet multi-disc for Increased brake torque capacity
- Wet multi-disc brakes for anti explosion(SAHR)
- Options
- ★ Flange to flange distance, Wheel mounting dimension, Total ratio
- ★ Frame MTG: Rigid with pads, Centre oscillation, Offset oscillation
- ★ Brake：Wet multi-disc，Dry disc
- ★ Differential: Open differential, Limited slip differential, Mechanical diff. lock

Range Of Applications

- Backhoe loaders、Wheel excavators、Wheel loaders、Telescopic handlers、Rock drilling jumper、Wet spray jumper、Harvesting machines、Tractors

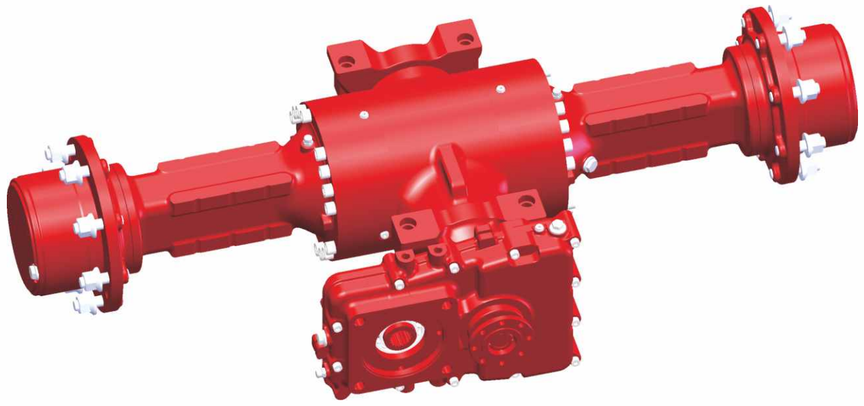

刚性驱动桥
Rigid drive axle

275-1270

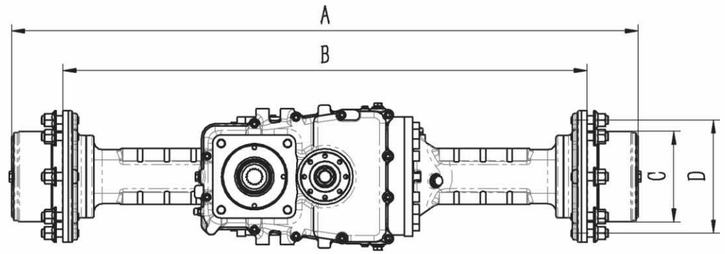

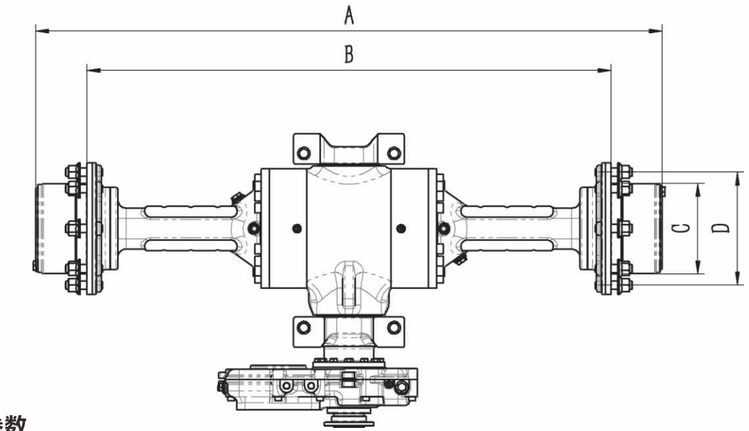

技术参数
Technical Parameter

整桥速比	Total Ratio	20.5 / 11.598 / 16.364 / 25.8
桥总长-A	Planetary Hub Length (mm)	1514
轮辐距-B	Flange to Flang (mm)	1270
轮毂安装直径-C	Wheel Pilot Diameter (mm)	Φ220.8h11
轮毂螺栓分度圆直径-D	Wheel Bolt Circle Diameter (mm)	275
动态载荷	Dynamic Load (kg)	8000
最大输出扭矩	Max. Output Touque (N.m)	30000

洛阳汇鹏重工机械有限公司
LUOYANG HUIPENG HEAVY INDUSTRIES MECHINERY CO., LTD

地址：洛阳市孟津区麻屯镇金水大道246号
电话：13526947669　网址：www.lyhuipeng.cn

转向驱动桥
Steering drive axle

275-1400

产品优势

- 产品已系列化、标准化、模块儿化，能快速满足客户的定制需求
- 采用多片湿式制动器，制动扭矩大
- 湿式防爆制动器
- 可选装

★ 轮辐距、轮辋安装尺寸、速比
★ 车架连接方式：刚性连接、摆座连接、顶置摆轴连接
★ 传感器：转角传感器、速度传感器、中位传感器
★ 制动类型：湿式多片制动、干式钳盘制动
★ 差速类型：普通差速器、限滑差速器、差速锁
★ 转向角：25°— 45°

应用范围

- 挖掘装载机、轮式挖掘机、轮式装载机 、伸缩臂叉装车 、凿岩台车、湿喷台车、收获机械 、拖拉机

Product Advantages

- With a full line, Standardized and modular axle design, for quickly meet customized demands
- Wet multi-disc for Increased brake torque capacity
- Wet multi-disc brakes for anti explosion(SAHR).
- Options

★ Flange to flange distance, Wheel mounting dimension, Total ratio
★ Frame MTG: Rigid with pads, Centre oscillation, Offset oscillation
★ Sensor：Steering sensor, Speed sensor, Middle position sensor
★ Brake：Wet multi-disc，Dry disc
★ Differential: Open differential, Limited slip differential, Mechanical diff. lock
★ Steering Angle 25°— 45°

Range Of Applications

- Backhoe loaders、Wheel excavators、Wheel loaders、Telescopic handlers、Rock drilling jumper、Wet spray jumper、Harvesting machines、Tractors

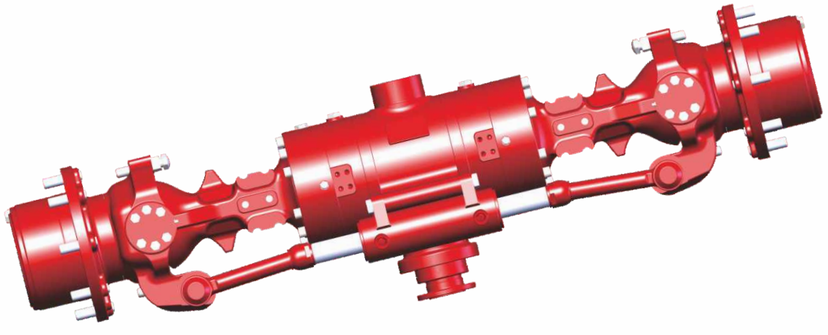

转向驱动桥
Steering drive axle

275-1400

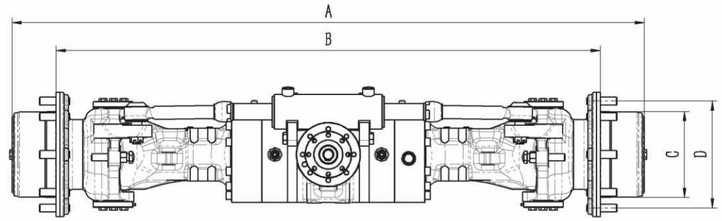

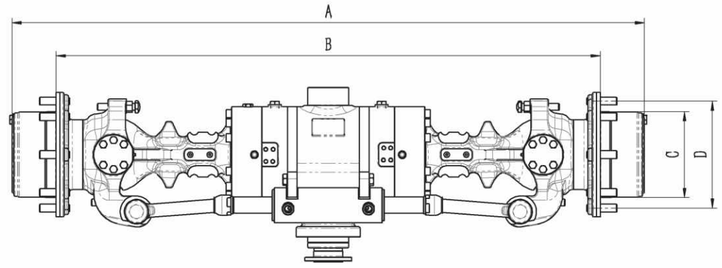

技术参数
Technical Parameter

整桥速比	Total Ratio	13.335 / 11.54 / 13.85 / 16
桥总长-A	Planetary Hub Length (mm)	1566 / 1627
轮辐距-B	Flange to Flang (mm)	1400
轮毂安装直径-C	Wheel Pilot Diameter (mm)	Φ160.8h11 / Φ220.8h11
轮毂螺栓分度圆直径-D	Wheel Bolt Circle Diameter (mm)	205 / 275
动态载荷	Dynamic Load (kg)	5500
最大输出扭矩	Max. Output Touque (N.m)	/

洛阳汇鹏重工机械有限公司
LUOYANG HUIPENG HEAVY INDUSTRIES MECHINERY CO., LTD
地址：洛阳市孟津区麻屯镇金水大道246号
电话：13526947669　网址：www.lyhuipeng.cn

刚性驱动桥
Rigid drive axle

275-1465

产品优势

- 产品已系列化、标准化、模块儿化，能快速满足客户的定制需求
- 采用多片湿式制动器，制动扭矩大
- 湿式防爆制动器
- 可选装
- ★ 轮辐距、轮辋安装尺寸、速比
- ★ 车架连接方式：刚性连接，摆座连接，顶置摆轴连接
- ★ 制动类型：湿式多片制动，干式钳盘制动
- ★ 差速类型：普通差速器，限滑差速器，差速锁

应用范围

- 挖掘装载机、轮式挖掘机、轮式装载机 、伸缩臂叉装车 、凿岩台车、湿喷台车、收获机械 、拖拉机

Product Advantages

- With a full line, Standardized and modular axle design, for quickly meet customized demands
- Wet multi-disc for Increased brake torque capacity
- Wet multi-disc brakes for anti explosion(SAHR)
- Options
- ★ Flange to flange distance, Wheel mounting dimension, Total ratio
- ★ Frame MTG: Rigid with pads, Centre oscillation, Offset oscillation
- ★ Brake：Wet multi-disc，Dry disc
- ★ Differential: Open differential, Limited slip differential, Mechanical diff. lock

Range Of Applications

- Backhoe loaders、Wheel excavators、Wheel loaders、Telescopic handlers、Rock drilling jumper、Wet spray jumper、Harvesting machines、Tractors



刚性驱动桥
Rigid drive axle

275-1465

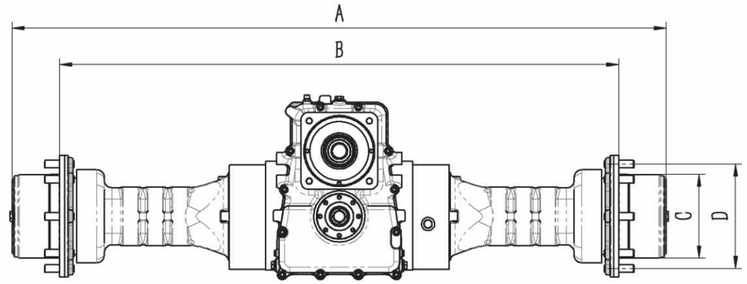

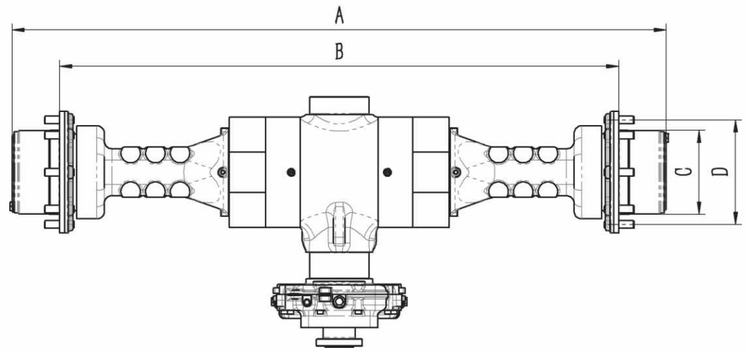

技术参数
Technical Parameter

整桥速比	Total Ratio	20.5 / 11.598 / 16.364 / 25.8
桥总长-A	Planetary Hub Length (mm)	1745 / 1721
轮辐距-B	Flange to Flang (mm)	1465
轮毂安装直径-C	Wheel Pilot Diameter (mm)	Φ280.6h11 / Φ220.8h11
轮毂螺栓分度圆直径-D	Wheel Bolt Circle Diameter (mm)	335 / 275
动态载荷	Dynamic Load (kg)	10000
最大输出扭矩	Max. Output Touque (N.m)	30000

洛阳汇鹏重工机械有限公司
LUOYANG HUIPENG HEAVY INDUSTRIES MECHINERY CO., LTD

地址：洛阳市孟津区麻屯镇金水大道246号
电话：13526947669　网址：www.lyhuipeng.cn

转向驱动桥
Steering drive axle

275-1530

产品优势

- 产品已系列化、标准化、模块儿化，能快速满足客户的定制需求
- 采用多片湿式制动器，制动扭矩大
- 湿式防爆制动器
- 可选装

★ 轮辐距、轮辋安装尺寸、速比
★ 车架连接方式：刚性连接、摆座连接、顶置摆轴连接
★ 传感器：转角传感器、速度传感器、中位传感器
★ 制动类型：湿式多片制动、干式钳盘制动
★ 差速类型：普通差速器、限滑差速器、差速锁
★ 转向角：25°— 55°

应用范围

- 挖掘装载机、轮式挖掘机、轮式装载机 、伸缩臂叉装车 、凿岩台车、湿喷台车、收获机械 、拖拉机

Product Advantages

- With a full line, Standardized and modular axle design, for quickly meet customized demands
- Wet multi-disc for Increased brake torque capacity
- Wet multi-disc brakes for anti explosion(SAHR).
- Options

★ Flange to flange distance, Wheel mounting dimension, Total ratio
★ Frame MTG: Rigid with pads, Centre oscillation, Offset oscillation
★ Sensor：Steering sensor, Speed sensor, Middle position sensor
★ Brake：Wet multi-disc，Dry disc
★ Differential: Open differential, Limited slip differential, Mechanical diff. lock
★ Steering Angle 25°— 55°

Range Of Applications

- Backhoe loaders、Wheel excavators、Wheel loaders、Telescopic handlers、Rock drilling jumper、Wet spray jumper、Harvesting machines、Tractors

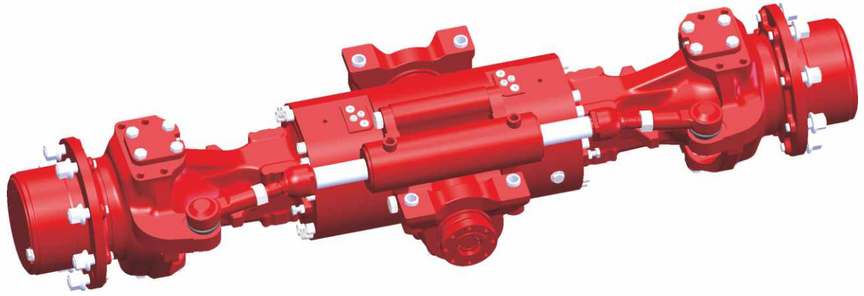

转向驱动桥
Steering drive axle

275-1530

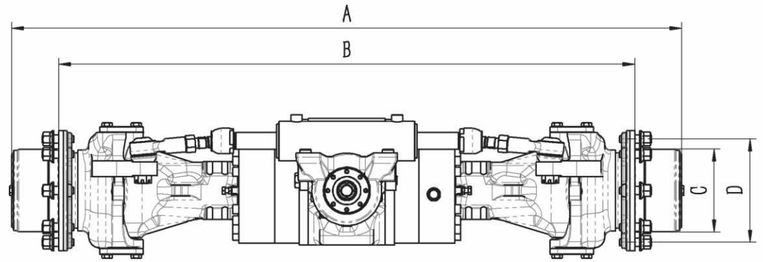

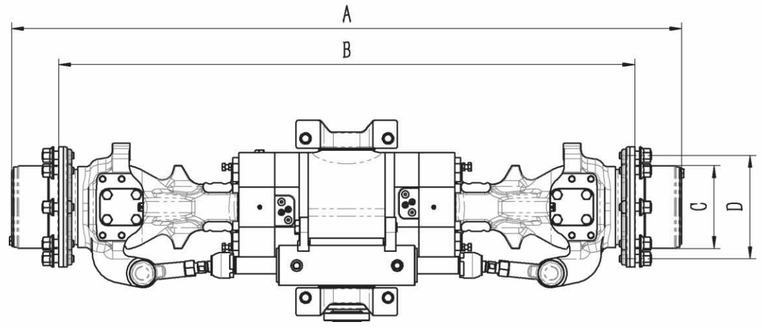

技术参数
Technical Parameter

整桥速比	Total Ratio	20.5 / 11.598 / 16.364 / 25.8 / 13.345
桥总长-A	Planetary Hub Length (mm)	1786 / 1696
轮辐距-B	Flange to Flang (mm)	1530
轮毂安装直径-C	Wheel Pilot Diameter (mm)	Φ220.8h11 / Φ160.8h11
轮毂螺栓分度圆直径-D	Wheel Bolt Circle Diameter (mm)	275 / 205
动态载荷	Dynamic Load (kg)	8000
最大输出扭矩	Max. Output Touque (N.m)	30000

洛阳汇鹏重工机械有限公司
LUOYANG HUIPENG HEAVY INDUSTRIES MECHINERY CO., LTD
地址：洛阳市孟津区麻屯镇金水大道246号
电话：13526947669　网址：www.lyhuipeng.cn

刚性驱动桥
Rigid drive axle

275-1530

产品优势

- 产品已系列化、标准化、模块儿化，能快速满足客户的定制需求
- 采用多片湿式制动器，制动扭矩大
- 湿式防爆制动器
- 可选装
- ★ 轮辐距、轮辋安装尺寸、速比
- ★ 车架连接方式：刚性连接，摆座连接，顶置摆轴连接
- ★ 制动类型：湿式多片制动，干式钳盘制动
- ★ 差速类型：普通差速器，限滑差速器，差速锁

Product Advantages

- With a full line, Standardized and modular axle design, for quickly meet customized demands
- Wet multi-disc for Increased brake torque capacity
- Wet multi-disc brakes for anti explosion(SAHR)
- Options
- ★ Flange to flange distance, Wheel mounting dimension, Total ratio
- ★ Frame MTG: Rigid with pads, Centre oscillation, Offset oscillation
- ★ Brake：Wet multi-disc，Dry disc
- ★ Differential: Open differential, Limited slip differential, Mechanical diff. lock

应用范围

- 挖掘装载机、轮式挖掘机、轮式装载机 、伸缩臂叉装车 、凿岩台车、湿喷台车、收获机械 、拖拉机

Range Of Applications

- Backhoe loaders、Wheel excavators、Wheel loaders、Telescopic handlers、Rock drilling jumper、Wet spray jumper、Harvesting machines、Tractors

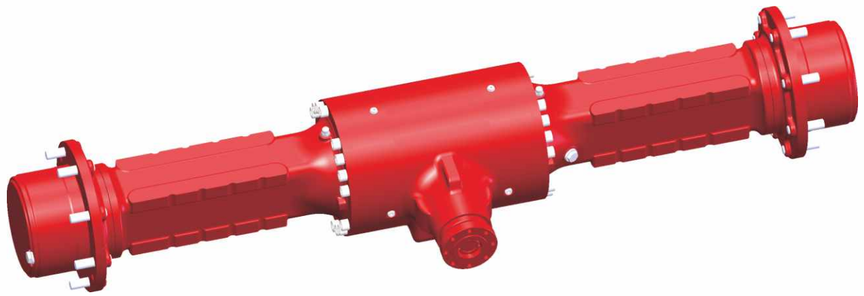

刚性驱动桥
Rigid drive axle

275-1530

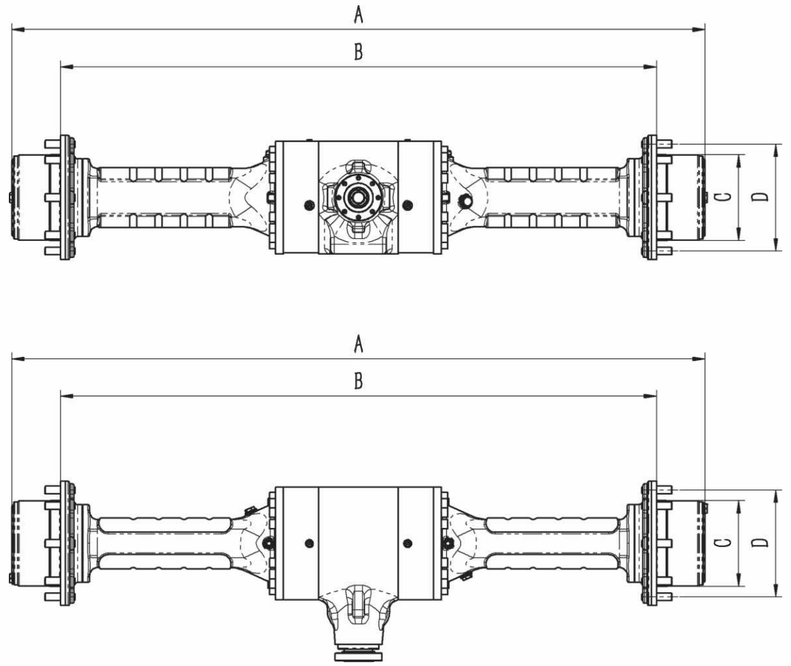

技术参数
Technical Parameter

整桥速比	Total Ratio	20.5 / 11.598 / 16.364 / 25.8 / 13.345
桥总长-A	Planetary Hub Length (mm)	1786 / 1696
轮辐距-B	Flange to Flang (mm)	1530
轮毂安装直径-C	Wheel Pilot Diameter (mm)	Φ220.8h11 / Φ160.8h11
轮毂螺栓分度圆直径-D	Wheel Bolt Circle Diameter (mm)	275 / 205
动态载荷	Dynamic Load (kg)	8000
最大输出扭矩	Max. Output Touque (N.m)	30000

洛阳汇鹏重工机械有限公司
LUOYANG HUIPENG HEAVY INDUSTRIES MECHINERY CO., LTD
地址：洛阳市孟津区麻屯镇金水大道246号
电话：13526947669　网址：www.lyhuipeng.cn

转向驱动桥
Steering drive axle

275-1650

产品优势

- 产品已系列化、标准化、模块儿化，能快速满足客户的定制需求
- 采用多片湿式制动器，制动扭矩大
- 湿式防爆制动器
- 可选装

★ 轮辐距、轮辋安装尺寸、速比
★ 车架连接方式：刚性连接、摆座连接、顶置摆轴连接
★ 传感器：转角传感器、速度传感器、中位传感器
★ 制动类型：湿式多片制动、干式钳盘制动
★ 差速类型：普通差速器、限滑差速器、差速锁
★ 转向角：25°— 55°

应用范围

- 挖掘装载机、轮式挖掘机、轮式装载机 、伸缩臂叉装车 、凿岩台车、湿喷台车、收获机械 、拖拉机

Product Advantages

- With a full line, Standardized and modular axle design, for quickly meet customized demands
- Wet multi-disc for Increased brake torque capacity
- Wet multi-disc brakes for anti explosion(SAHR).
- Options

★ Flange to flange distance, Wheel mounting dimension, Total ratio
★ Frame MTG: Rigid with pads, Centre oscillation, Offset oscillation
★ Sensor：Steering sensor, Speed sensor, Middle position sensor
★ Brake：Wet multi-disc，Dry disc
★ Differential: Open differential, Limited slip differential, Mechanical diff. lock
★ Steering Angle 25°— 55°

Range Of Applications

- Backhoe loaders、Wheel excavators、Wheel loaders、Telescopic handlers、Rock drilling jumper、Wet spray jumper、Harvesting machines、Tractors

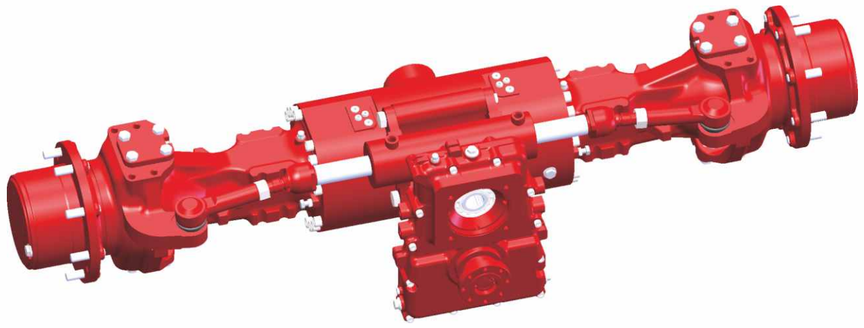

转向驱动桥
Steering drive axle

275-1650

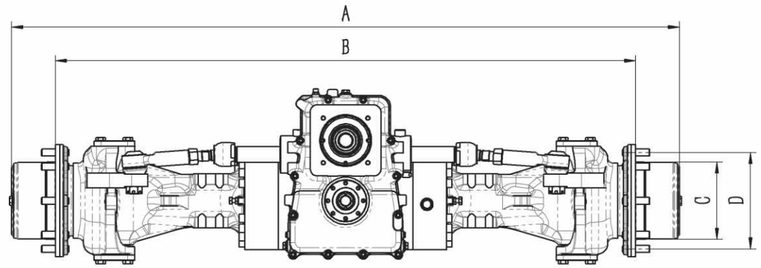

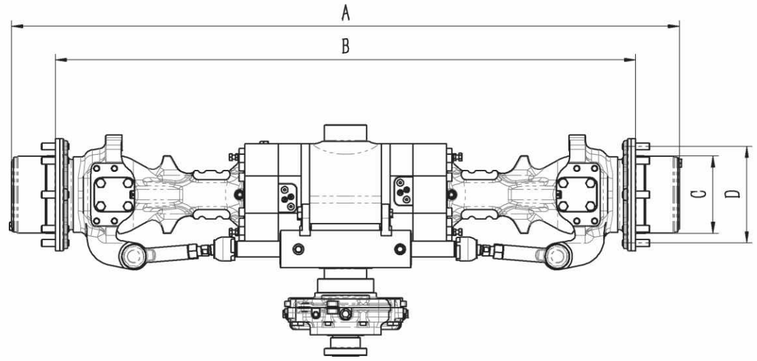

技术参数
Technical Parameter

整桥速比	Total Ratio	20.5 / 11.598 / 16.364 / 25.8
桥总长-A	Planetary Hub Length (mm)	1906 / 1930
轮辐距-B	Flange to Flang (mm)	1650
轮毂安装直径-C	Wheel Pilot Diameter (mm)	Φ220.8h11 / Φ280.6h11
轮毂螺栓分度圆直径-D	Wheel Bolt Circle Diameter (mm)	275 / 335
动态载荷	Dynamic Load (kg)	10000
最大输出扭矩	Max. Output Touque (N.m)	30000

洛阳汇鹏重工机械有限公司
LUOYANG HUIPENG HEAVY INDUSTRIES MECHINERY CO., LTD

地址：洛阳市孟津区麻屯镇金水大道246号
电话：13526947669　网址：www.lyhuipeng.cn

刚性驱动桥
Rigid drive axle

335-1120

产品优势

- 产品已系列化、标准化、模块儿化，能快速满足客户的定制需求
- 采用多片湿式制动器，制动扭矩大
- 湿式防爆制动器
- 可选装
- ★ 轮辐距、轮辋安装尺寸、速比
- ★ 车架连接方式：刚性连接，摆座连接，顶置摆轴连接
- ★ 制动类型：湿式多片制动，干式钳盘制动
- ★ 差速类型：普通差速器，限滑差速器，差速锁

应用范围

- 挖掘装载机、轮式挖掘机、轮式装载机 、伸缩臂叉装车 、凿岩台车、湿喷台车、收获机械 、拖拉机

Product Advantages

- With a full line, Standardized and modular axle design, for quickly meet customized demands
- Wet multi-disc for Increased brake torque capacity
- Wet multi-disc brakes for anti explosion(SAHR)
- Options
- ★ Flange to flange distance, Wheel mounting dimension, Total ratio
- ★ Frame MTG: Rigid with pads, Centre oscillation, Offset oscillation
- ★ Brake：Wet multi-disc，Dry disc
- ★ Differential: Open differential, Limited slip differential, Mechanical diff. lock

Range Of Applications

- Backhoe loaders、Wheel excavators、Wheel loaders、Telescopic handlers、Rock drilling jumper、Wet spray jumper、Harvesting machines、Tractors



刚性驱动桥
Rigid drive axle

335-1120

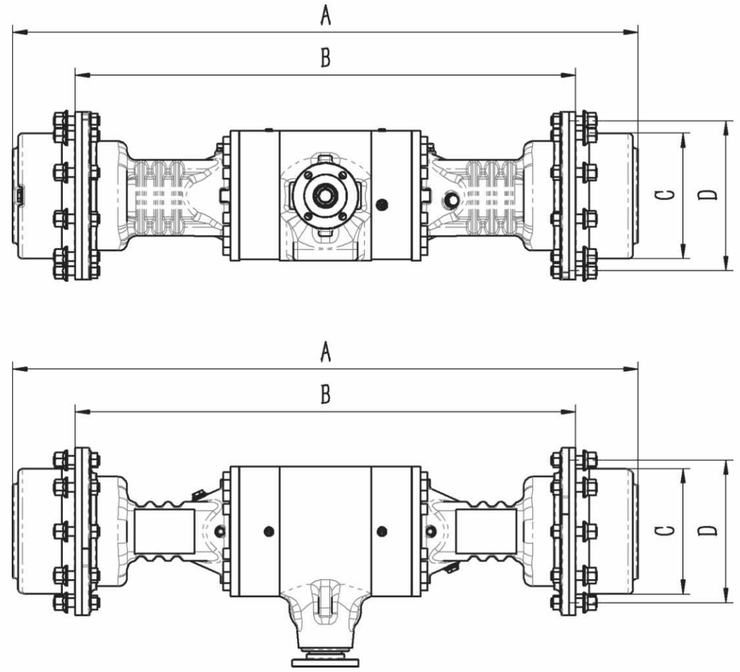

技术参数
Technical Parameter

整桥速比	Total Ratio	20.5 / 11.598 / 16.364 / 25.8
桥总长-A	Planetary Hub Length (mm)	1400
轮辐距-B	Flange to Flang (mm)	1120
轮毂安装直径-C	Wheel Pilot Diameter (mm)	Φ280.6h11
轮毂螺栓分度圆直径-D	Wheel Bolt Circle Diameter (mm)	335
动态载荷	Dynamic Load (kg)	8000
最大输出扭矩	Max. Output Touque (N.m)	30000

洛阳汇鹏重工机械有限公司
LUOYANG HUIPENG HEAVY INDUSTRIES MECHINERY CO., LTD

地址：洛阳市孟津区麻屯镇金水大道246号
电话：13526947669　网址：www.lyhuipeng.cn

转向驱动桥
Steering drive axle

335-1650

产品优势

- 产品已系列化、标准化、模块儿化，能快速满足客户的定制需求
- 采用多片湿式制动器，制动扭矩大
- 湿式防爆制动器
- 可选装

★ 轮辐距、轮辋安装尺寸、速比
★ 车架连接方式：刚性连接、摆座连接、顶置摆轴连接
★ 传感器：转角传感器、速度传感器、中位传感器
★ 制动类型：湿式多片制动、干式钳盘制动
★ 差速类型：普通差速器、限滑差速器、差速锁
★ 转向角：最大25°

应用范围

- 挖掘装载机、轮式挖掘机、轮式装载机 、伸缩臂叉装车 、凿岩台车、湿喷台车、收获机械 、拖拉机

Product Advantages

- With a full line, Standardized and modular axle design, for quickly meet customized demands
- Wet multi-disc for Increased brake torque capacity
- Wet multi-disc brakes for anti explosion(SAHR).
- Options

★ Flange to flange distance, Wheel mounting dimension, Total ratio
★ Frame MTG: Rigid with pads, Centre oscillation, Offset oscillation
★ Sensor：Steering sensor, Speed sensor, Middle position sensor
★ Brake：Wet multi-disc，Dry disc
★ Differential: Open differential, Limited slip differential, Mechanical diff. lock
★ Steering Angle Max 25°

Range Of Applications

- Backhoe loaders、Wheel excavators、Wheel loaders、Telescopic handlers、Rock drilling jumper、Wet spray jumper、Harvesting machines、Tractors

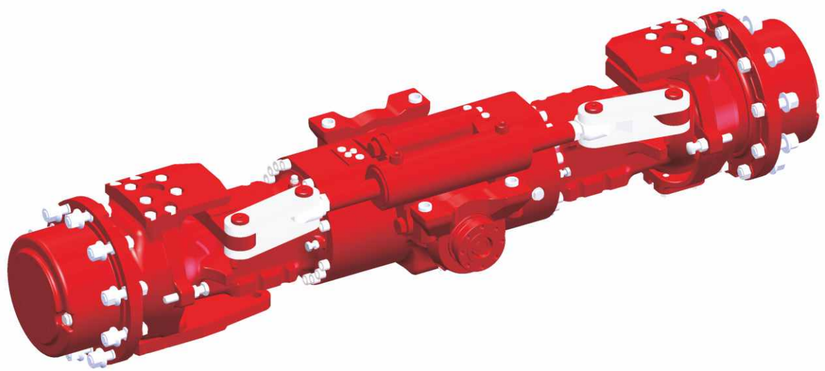

转向驱动桥
Steering drive axle

335-1650

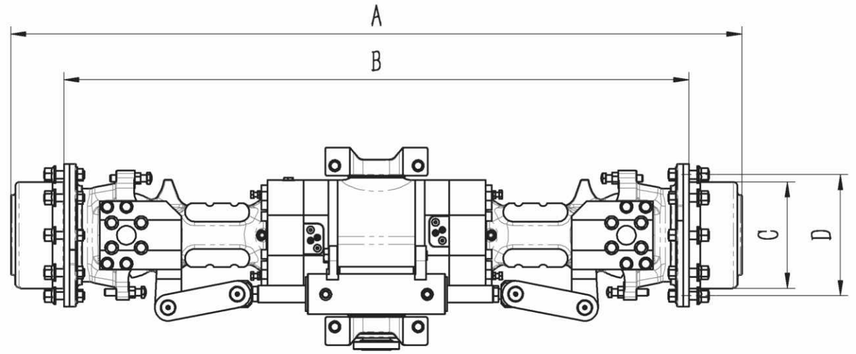

技术参数
Technical Parameter

整桥速比	Total Ratio	20.5 / 11.598 / 16.364 / 25.8
桥总长-A	Planetary Hub Length (mm)	1930
轮辐距-B	Flange to Flang (mm)	1650
轮毂安装直径-C	Wheel Pilot Diameter (mm)	Φ280.6h11
轮毂螺栓分度圆直径-D	Wheel Bolt Circle Diameter (mm)	335
动态载荷	Dynamic Load (kg)	20000
最大输出扭矩	Max. Output Touque (N.m)	30000

洛阳汇鹏重工机械有限公司
LUOYANG HUIPENG HEAVY INDUSTRIES MECHINERY CO., LTD
地址：洛阳市孟津区麻屯镇金水大道246号
电话：13526947669　网址：www.lyhuipeng.cn

刚性驱动桥
Rigid drive axle

335-1650

产品优势

- 产品已系列化、标准化、模块儿化，能快速满足客户的定制需求
- 采用多片湿式制动器，制动扭矩大
- 湿式防爆制动器
- 可选装
- ★ 轮辐距、轮辋安装尺寸、速比
- ★ 车架连接方式：刚性连接，摆座连接，顶置摆轴连接
- ★ 制动类型：湿式多片制动，干式钳盘制动
- ★ 差速类型：普通差速器，限滑差速器，差速锁

Product Advantages

- With a full line, Standardized and modular axle design, for quickly meet customized demands
- Wet multi-disc for Increased brake torque capacity
- Wet multi-disc brakes for anti explosion(SAHR)
- Options
- ★ Flange to flange distance, Wheel mounting dimension, Total ratio
- ★ Frame MTG: Rigid with pads, Centre oscillation, Offset oscillation
- ★ Brake：Wet multi-disc，Dry disc
- ★ Differential: Open differential, Limited slip differential, Mechanical diff. lock

应用范围

- 挖掘装载机、轮式挖掘机、轮式装载机 、伸缩臂叉装车 、凿岩台车、湿喷台车、收获机械 、拖拉机

Range Of Applications

- Backhoe loaders、Wheel excavators、Wheel loaders、Telescopic handlers、Rock drilling jumper、Wet spray jumper、Harvesting machines、Tractors

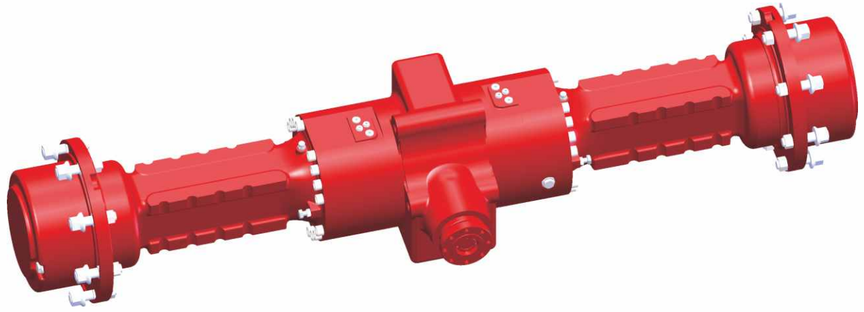

刚性驱动桥
Rigid drive axle

335-1650

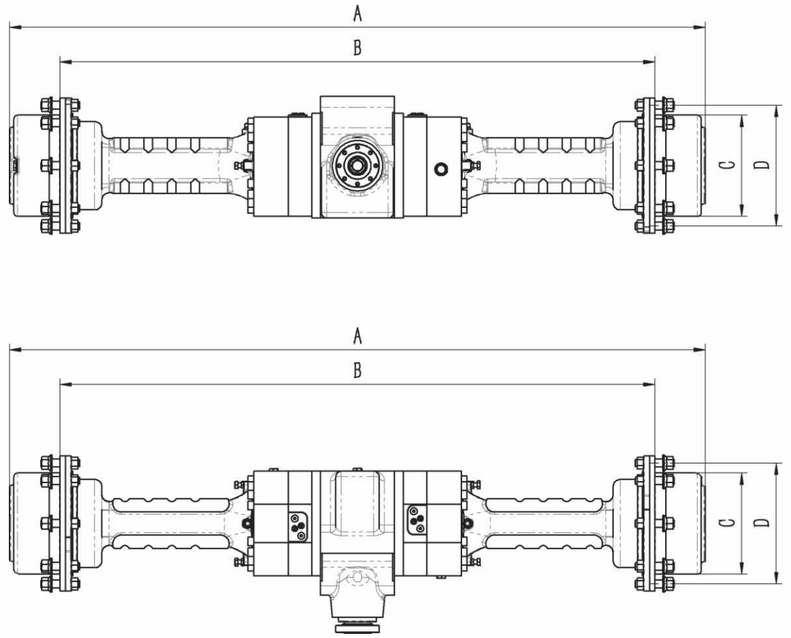

技术参数
Technical Parameter

整桥速比	Total Ratio	20.5 / 11.598 / 16.364 / 25.8
桥总长-A	Planetary Hub Length (mm)	1930
轮辐距-B	Flange to Flang (mm)	1650
轮毂安装直径-C	Wheel Pilot Diameter (mm)	Φ280.6h11
轮毂螺栓分度圆直径-D	Wheel Bolt Circle Diameter (mm)	335
动态载荷	Dynamic Load (kg)	14000
最大输出扭矩	Max. Output Touque (N.m)	30000

洛阳汇鹏重工机械有限公司
LUOYANG HUIPENG HEAVY INDUSTRIES MECHINERY CO., LTD
地址：洛阳市孟津区麻屯镇金水大道246号
电话：13526947669　网址：www.lyhuipeng.cn

刚性驱动桥
Rigid drive axle

335-1773

产品优势

- 产品已系列化、标准化、模块儿化，能快速满足客户的定制需求
- 采用多片湿式制动器，制动扭矩大
- 湿式防爆制动器
- 可选装
- ★ 轮辐距、轮辋安装尺寸、速比
- ★ 车架连接方式：刚性连接，摆座连接，顶置摆轴连接
- ★ 制动类型：湿式多片制动，干式钳盘制动
- ★ 差速类型：普通差速器，限滑差速器，差速锁

应用范围

- 挖掘装载机、轮式挖掘机、轮式装载机 、伸缩臂叉装车 、凿岩台车、湿喷台车、收获机械 、拖拉机

Product Advantages

- With a full line, Standardized and modular axle design, for quickly meet customized demands
- Wet multi-disc for Increased brake torque capacity
- Wet multi-disc brakes for anti explosion(SAHR)
- Options
- ★ Flange to flange distance, Wheel mounting dimension, Total ratio
- ★ Frame MTG: Rigid with pads, Centre oscillation, Offset oscillation
- ★ Brake：Wet multi-disc，Dry disc
- ★ Differential: Open differential, Limited slip differential, Mechanical diff. lock

Range Of Applications

- Backhoe loaders、Wheel excavators、Wheel loaders、Telescopic handlers、Rock drilling jumper、Wet spray jumper、Harvesting machines、Tractors

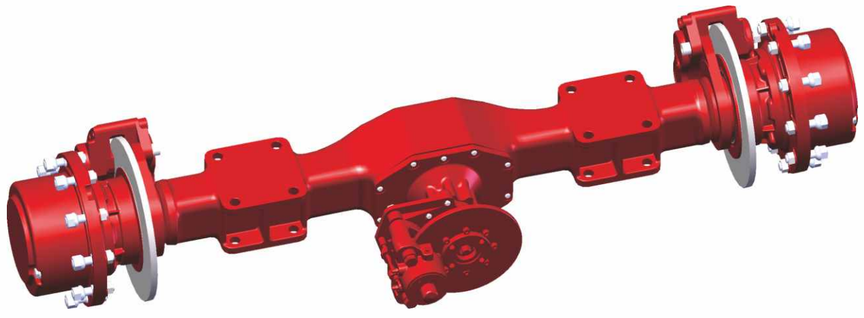

刚性驱动桥
Rigid drive axle

335-1773

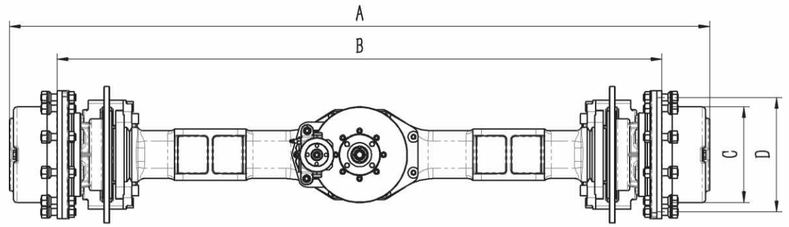

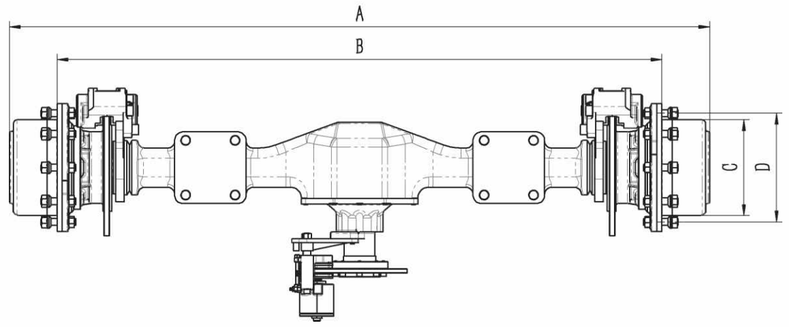

技术参数
Technical Parameter

整桥速比	Total Ratio	20.5 / 11.598 / 16.364 / 25.8
桥总长-A	Planetary Hub Length (mm)	2003
轮辐距-B	Flange to Flang (mm)	1773
轮毂安装直径-C	Wheel Pilot Diameter (mm)	Φ280.6h11
轮毂螺栓分度圆直径-D	Wheel Bolt Circle Diameter (mm)	335
动态载荷	Dynamic Load (kg)	10000
最大输出扭矩	Max. Output Touque (N.m)	30000

洛阳汇鹏重工机械有限公司
LUOYANG HUIPENG HEAVY INDUSTRIES MECHINERY CO., LTD

地址：洛阳市孟津区麻屯镇金水大道246号
电话：13526947669　网址：www.lyhuipeng.cn

转向驱动桥
Steering drive axle

335-1773

产品优势

- 产品已系列化、标准化、模块儿化，能快速满足客户的定制需求
- 采用多片湿式制动器，制动扭矩大
- 湿式防爆制动器
- 可选装

★ 轮辐距、轮辋安装尺寸、速比
★ 车架连接方式：刚性连接、摆座连接、顶置摆轴连接
★ 传感器：转角传感器、速度传感器、中位传感器
★ 制动类型：湿式多片制动、干式钳盘制动
★ 差速类型：普通差速器、限滑差速器、差速锁
★ 转向角：25°— 55°

应用范围

- 挖掘装载机、轮式挖掘机、轮式装载机 、伸缩臂叉装车 、凿岩台车、湿喷台车、收获机械 、拖拉机

Product Advantages

- With a full line, Standardized and modular axle design, for quickly meet customized demands
- Wet multi-disc for Increased brake torque capacity
- Wet multi-disc brakes for anti explosion(SAHR).
- Options

★ Flange to flange distance, Wheel mounting dimension, Total ratio
★ Frame MTG: Rigid with pads, Centre oscillation, Offset oscillation
★ Sensor：Steering sensor, Speed sensor, Middle position sensor
★ Brake：Wet multi-disc，Dry disc
★ Differential: Open differential, Limited slip differential, Mechanical diff. lock
★ Steering Angle 25°— 55°

Range Of Applications

- Backhoe loaders、Wheel excavators、Wheel loaders、Telescopic handlers、Rock drilling jumper、Wet spray jumper、Harvesting machines、Tractors

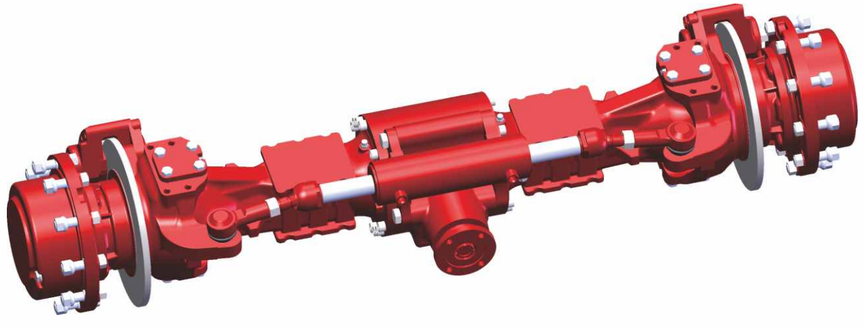

转向驱动桥
Steering drive axle

335-1773

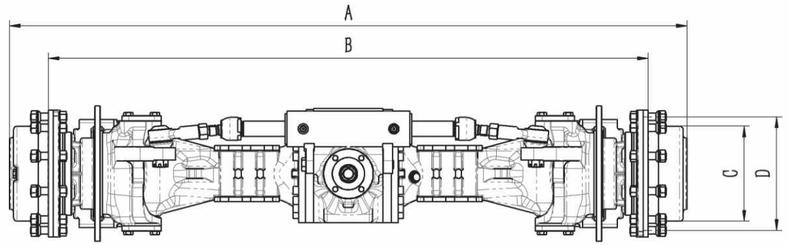

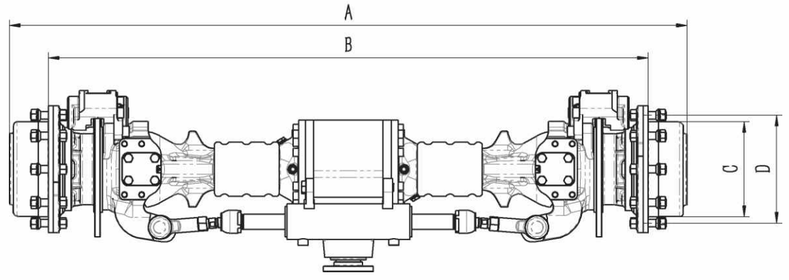

技术参数
Technical Parameter

整桥速比	Total Ratio	20.5 / 11.598 / 16.364 / 25.8
桥总长-A	Planetary Hub Length (mm)	2003
轮辐距-B	Flange to Flang (mm)	1773
轮毂安装直径-C	Wheel Pilot Diameter (mm)	Φ280.6h11
轮毂螺栓分度圆直径-D	Wheel Bolt Circle Diameter (mm)	335
动态载荷	Dynamic Load (kg)	10000
最大输出扭矩	Max. Output Touque (N.m)	30000

洛阳汇鹏重工机械有限公司
LUOYANG HUIPENG HEAVY INDUSTRIES MECHINERY CO., LTD
地址：洛阳市孟津区麻屯镇金水大道246号
电话：13526947669　网址：www.lyhuipeng.cn

刚性驱动桥
Rigid drive axle

335-1790

产品优势

- 产品已系列化、标准化、模块儿化，能快速满足客户的定制需求
- 采用多片湿式制动器，制动扭矩大
- 湿式防爆制动器
- 可选装
- ★ 轮辐距、轮辋安装尺寸、速比
- ★ 车架连接方式：刚性连接，摆座连接，顶置摆轴连接
- ★ 制动类型：湿式多片制动，干式钳盘制动
- ★ 差速类型：普通差速器，限滑差速器，差速锁

应用范围

- 挖掘装载机、轮式挖掘机、轮式装载机 、伸缩臂叉装车 、凿岩台车、湿喷台车、收获机械 、拖拉机

Product Advantages

- With a full line, Standardized and modular axle design, for quickly meet customized demands
- Wet multi-disc for Increased brake torque capacity
- Wet multi-disc brakes for anti explosion(SAHR)
- Options
- ★ Flange to flange distance, Wheel mounting dimension, Total ratio
- ★ Frame MTG: Rigid with pads, Centre oscillation, Offset oscillation
- ★ Brake：Wet multi-disc，Dry disc
- ★ Differential: Open differential, Limited slip differential, Mechanical diff. lock

Range Of Applications

- Backhoe loaders、Wheel excavators、Wheel loaders、Telescopic handlers、Rock drilling jumper、Wet spray jumper、Harvesting machines、Tractors

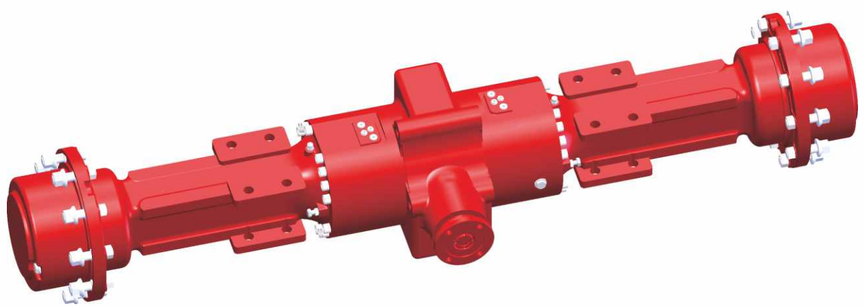

刚性驱动桥
Rigid drive axle

335-1790

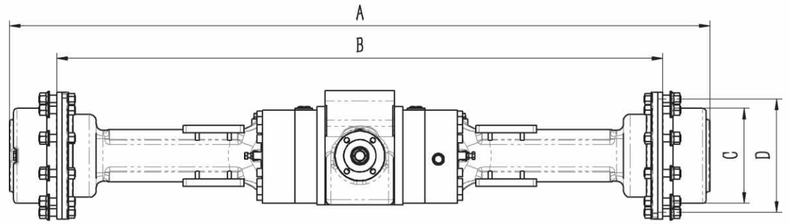

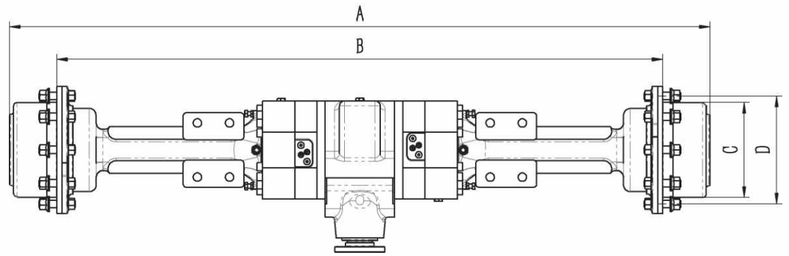

技术参数
Technical Parameter

整桥速比	Total Ratio	20.5 / 11.598 / 16.364 / 25.8
桥总长-A	Planetary Hub Length (mm)	2070
轮辐距-B	Flange to Flang (mm)	1790
轮毂安装直径-C	Wheel Pilot Diameter (mm)	Φ280.6h11
轮毂螺栓分度圆直径-D	Wheel Bolt Circle Diameter (mm)	335
动态载荷	Dynamic Load (kg)	10000
最大输出扭矩	Max. Output Touque (N.m)	36000

洛阳汇鹏重工机械有限公司
LUOYANG HUIPENG HEAVY INDUSTRIES MECHINERY CO., LTD

地址：洛阳市孟津区麻屯镇金水大道246号
电话：13526947669　网址：www.lyhuipeng.cn

转向驱动桥
Steering drive axle

335-1830

产品优势

- 产品已系列化、标准化、模块儿化，能快速满足客户的定制需求
- 采用多片湿式制动器，制动扭矩大
- 湿式防爆制动器
- 可选装

★ 轮辐距、轮辋安装尺寸、速比
★ 车架连接方式：刚性连接、摆座连接、顶置摆轴连接
★ 传感器：转角传感器、速度传感器、中位传感器
★ 制动类型：湿式多片制动、干式钳盘制动
★ 差速类型：普通差速器、限滑差速器、差速锁
★ 转向角：25°— 55°

应用范围

- 挖掘装载机、轮式挖掘机、轮式装载机 、伸缩臂叉装车 、凿岩台车、湿喷台车、收获机械 、拖拉机

Product Advantages

- With a full line, Standardized and modular axle design, for quickly meet customized demands
- Wet multi-disc for Increased brake torque capacity
- Wet multi-disc brakes for anti explosion(SAHR).
- Options

★ Flange to flange distance, Wheel mounting dimension, Total ratio
★ Frame MTG: Rigid with pads, Centre oscillation, Offset oscillation
★ Sensor：Steering sensor, Speed sensor, Middle position sensor
★ Brake：Wet multi-disc，Dry disc
★ Differential: Open differential, Limited slip differential, Mechanical diff. lock
★ Steering Angle 25°— 55°

Range Of Applications

- Backhoe loaders、Wheel excavators、Wheel loaders、Telescopic handlers、Rock drilling jumper、Wet spray jumper、Harvesting machines、Tractors

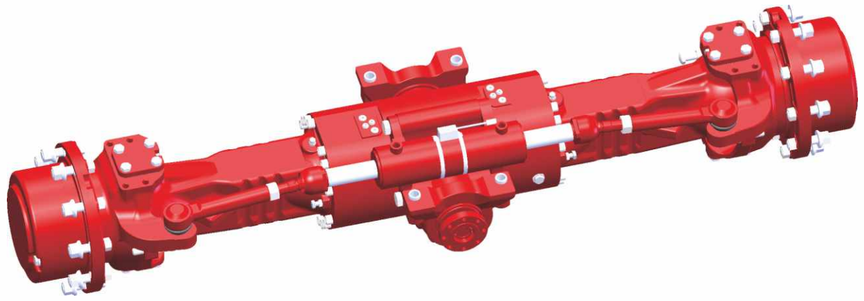

转向驱动桥
Steering drive axle

335-1830

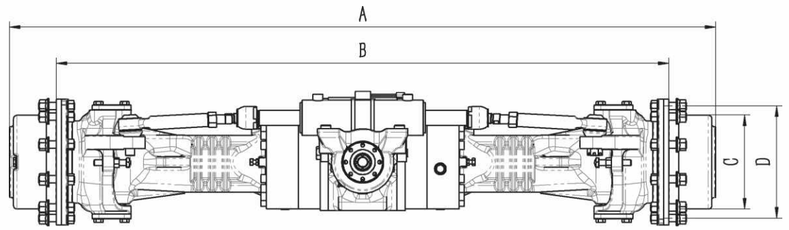

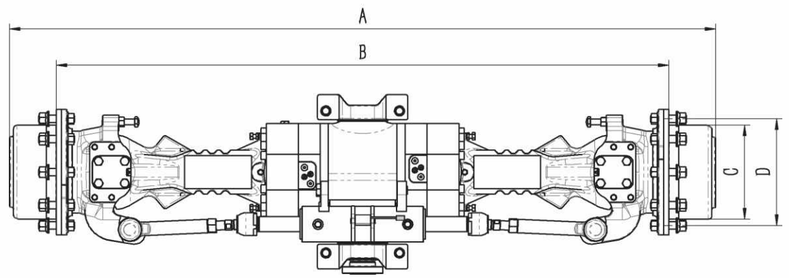

技术参数
Technical Parameter

整桥速比	Total Ratio	20.5 / 11.598 / 16.364或25.8
桥总长-A	Planetary Hub Length (mm)	2086 / 2110
轮辐距-B	Flange to Flang (mm)	1830
轮毂安装直径-C	Wheel Pilot Diameter (mm)	Φ220.8h11 / Φ280.6h11
轮毂螺栓分度圆直径-D	Wheel Bolt Circle Diameter (mm)	275 / 335
动态载荷	Dynamic Load (kg)	12000
最大输出扭矩	Max. Output Touque (N.m)	30000

洛阳汇鹏重工机械有限公司
LUOYANG HUIPENG HEAVY INDUSTRIES MECHINERY CO., LTD
地址：洛阳市孟津区麻屯镇金水大道246号
电话：13526947669　网址：www.lyhuipeng.cn

转向驱动桥
Steering drive axle

335-1920

产品优势

- 产品已系列化、标准化、模块儿化，能快速满足客户的定制需求
- 采用多片湿式制动器，制动扭矩大
- 湿式防爆制动器
- 可选装

★ 轮辐距、轮辋安装尺寸、速比
★ 车架连接方式：刚性连接、摆座连接、顶置摆轴连接
★ 传感器：转角传感器、速度传感器、中位传感器
★ 制动类型：湿式多片制动、干式钳盘制动
★ 差速类型：普通差速器、限滑差速器、差速锁
★ 转向角：25°— 55°

应用范围

- 挖掘装载机、轮式挖掘机、轮式装载机 、伸缩臂叉装车 、凿岩台车、湿喷台车、收获机械 、拖拉机

Product Advantages

- With a full line, Standardized and modular axle design, for quickly meet customized demands
- Wet multi-disc for Increased brake torque capacity
- Wet multi-disc brakes for anti explosion(SAHR).
- Options

★ Flange to flange distance, Wheel mounting dimension, Total ratio
★ Frame MTG: Rigid with pads, Centre oscillation, Offset oscillation
★ Sensor：Steering sensor, Speed sensor, Middle position sensor
★ Brake：Wet multi-disc，Dry disc
★ Differential: Open differential, Limited slip differential, Mechanical diff. lock
★ Steering Angle 25°— 55°

Range Of Applications

- Backhoe loaders、Wheel excavators、Wheel loaders、Telescopic handlers、Rock drilling jumper、Wet spray jumper、Harvesting machines、Tractors

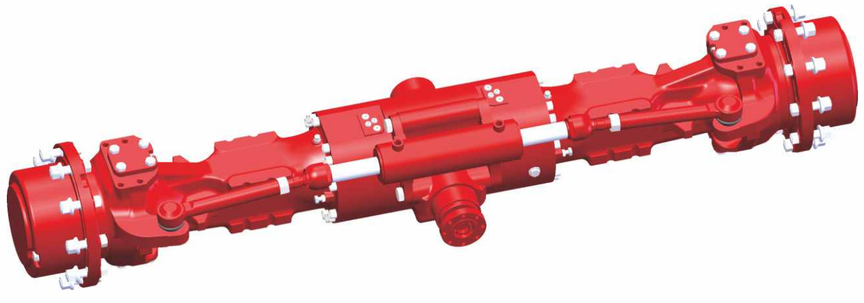

转向驱动桥
Steering drive axle

335-1920

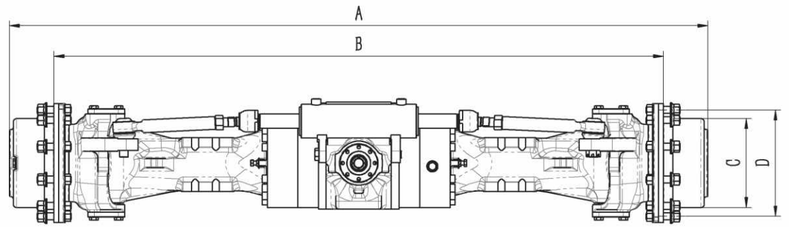

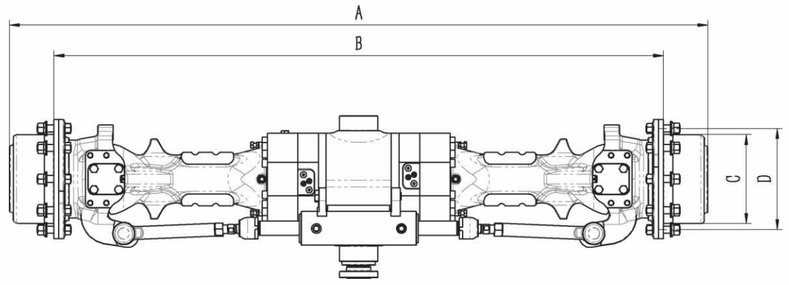

技术参数
Technical Parameter

整桥速比	Total Ratio	20.5 / 11.598 / 16.364 / 25.8
桥总长-A	Planetary Hub Length (mm)	2176 / 2200
轮辐距-B	Flange to Flang (mm)	1920
轮毂安装直径-C	Wheel Pilot Diameter (mm)	Φ220.8h11 / Φ280.6h11
轮毂螺栓分度圆直径-D	Wheel Bolt Circle Diameter (mm)	275 / 335
动态载荷	Dynamic Load (kg)	15000
最大输出扭矩	Max. Output Touque (N.m)	30000

洛阳汇鹏重工机械有限公司
LUOYANG HUIPENG HEAVY INDUSTRIES MECHINERY CO., LTD
地址：洛阳市孟津区麻屯镇金水大道246号
电话：13526947669　网址：www.lyhuipeng.cn

转向驱动桥
Steering drive axle

335-2050

产品优势

- 产品已系列化、标准化、模块儿化，能快速满足客户的定制需求
- 采用多片湿式制动器，制动扭矩大
- 湿式防爆制动器
- 可选装

★ 轮辐距、轮辋安装尺寸、速比
★ 车架连接方式：刚性连接、摆座连接、顶置摆轴连接
★ 传感器：转角传感器、速度传感器、中位传感器
★ 制动类型：湿式多片制动、干式钳盘制动
★ 差速类型：普通差速器、限滑差速器、差速锁
★ 转向角：25°— 55°

应用范围

- 挖掘装载机、轮式挖掘机、轮式装载机 、伸缩臂叉装车 、凿岩台车、湿喷台车、收获机械 、拖拉机

Product Advantages

- With a full line, Standardized and modular axle design, for quickly meet customized demands
- Wet multi-disc for Increased brake torque capacity
- Wet multi-disc brakes for anti explosion(SAHR).
- Options

★ Flange to flange distance, Wheel mounting dimension, Total ratio
★ Frame MTG: Rigid with pads, Centre oscillation, Offset oscillation
★ Sensor：Steering sensor, Speed sensor, Middle position sensor
★ Brake：Wet multi-disc，Dry disc
★ Differential: Open differential, Limited slip differential, Mechanical diff. lock
★ Steering Angle 25°— 55°

Range Of Applications

- Backhoe loaders、Wheel excavators、Wheel loaders、Telescopic handlers、Rock drilling jumper、Wet spray jumper、Harvesting machines、Tractors

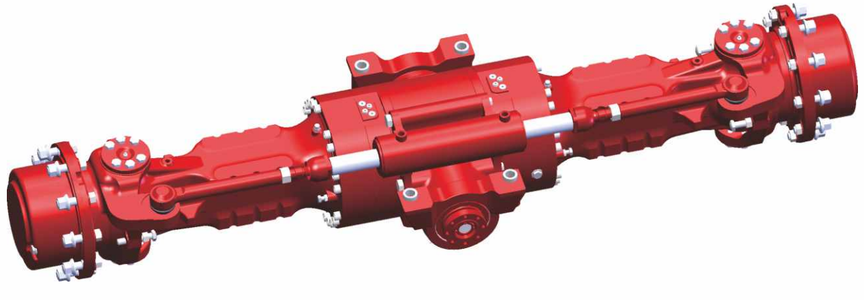

转向驱动桥
Steering drive axle

335-2050

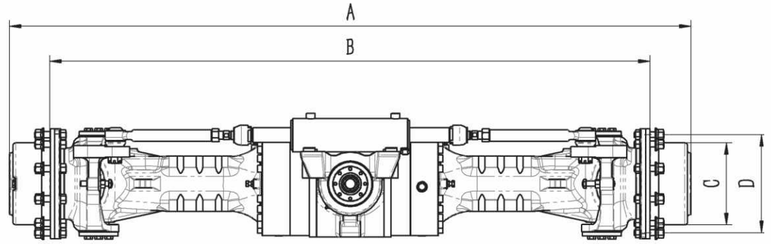

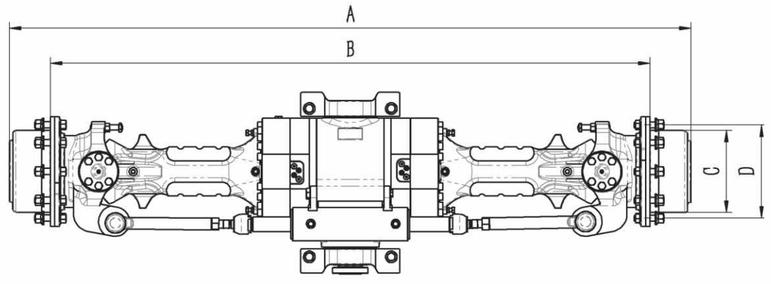

技术参数
Technical Parameter

整桥速比	Total Ratio	20.5 / 11.598 / 16.364 / 25.8
桥总长-A	Planetary Hub Length (mm)	2330
轮辐距-B	Flange to Flang (mm)	2050
轮毂安装直径-C	Wheel Pilot Diameter (mm)	Φ280.6h11
轮毂螺栓分度圆直径-D	Wheel Bolt Circle Diameter (mm)	335
动态载荷	Dynamic Load (kg)	25000
最大输出扭矩	Max. Output Touque (N.m)	40000

洛阳汇鹏重工机械有限公司
LUOYANG HUIPENG HEAVY INDUSTRIES MECHINERY CO., LTD
地址：洛阳市孟津区麻屯镇金水大道246号
电话：13526947669　网址：www.lyhuipeng.cn

刚性驱动桥
Rigid drive axle

335-2050

产品优势

- 产品已系列化、标准化、模块儿化，能快速满足客户的定制需求
- 采用多片湿式制动器，制动扭矩大
- 湿式防爆制动器
- 可选装
- ★ 轮辐距、轮辋安装尺寸、速比
- ★ 车架连接方式：刚性连接，摆座连接，顶置摆轴连接
- ★ 制动类型：湿式多片制动，干式钳盘制动
- ★ 差速类型：普通差速器，限滑差速器，差速锁

应用范围

- 挖掘装载机、轮式挖掘机、轮式装载机 、伸缩臂叉装车 、凿岩台车、湿喷台车、收获机械 、拖拉机

Product Advantages

- With a full line, Standardized and modular axle design, for quickly meet customized demands
- Wet multi-disc for Increased brake torque capacity
- Wet multi-disc brakes for anti explosion(SAHR)
- Options
- ★ Flange to flange distance, Wheel mounting dimension, Total ratio
- ★ Frame MTG: Rigid with pads, Centre oscillation, Offset oscillation
- ★ Brake：Wet multi-disc，Dry disc
- ★ Differential: Open differential, Limited slip differential, Mechanical diff. lock

Range Of Applications

- Backhoe loaders、Wheel excavators、Wheel loaders、Telescopic handlers、Rock drilling jumper、Wet spray jumper、Harvesting machines、Tractors



刚性驱动桥
Rigid drive axle

335-2050

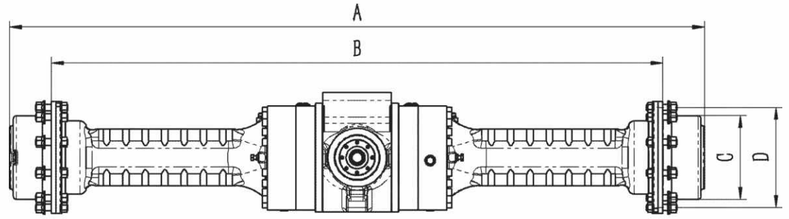

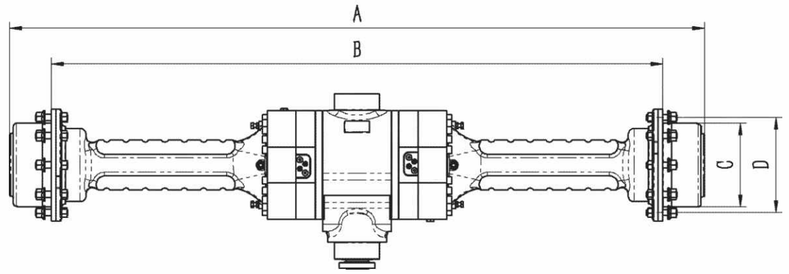

技术参数
Technical Parameter

整桥速比	Total Ratio	20.5 / 11.598 / 16.364 / 25.8
桥总长-A	Planetary Hub Length (mm)	2330
轮辐距-B	Flange to Flang (mm)	2050
轮毂安装直径-C	Wheel Pilot Diameter (mm)	Φ280.6h11
轮毂螺栓分度圆直径-D	Wheel Bolt Circle Diameter (mm)	335
动态载荷	Dynamic Load (kg)	25000
最大输出扭矩	Max. Output Touque (N.m)	40000

洛阳汇鹏重工机械有限公司
LUOYANG HUIPENG HEAVY INDUSTRIES MECHINERY CO., LTD

地址：洛阳市孟津区麻屯镇金水大道246号
电话：13526947669　网址：www.lyhuipeng.cn

转向驱动桥
Steering drive axle

335-2050

产品优势

- 产品已系列化、标准化、模块儿化，能快速满足客户的定制需求
- 采用多片湿式制动器，制动扭矩大
- 湿式防爆制动器
- 可选装

★ 轮辐距、轮辋安装尺寸、速比
★ 车架连接方式：刚性连接、摆座连接、顶置摆轴连接
★ 传感器：转角传感器、速度传感器、中位传感器
★ 制动类型：湿式多片制动、干式钳盘制动
★ 差速类型：普通差速器、限滑差速器、差速锁
★ 转向角：25°— 55°

应用范围

- 挖掘装载机、轮式挖掘机、轮式装载机 、伸缩臂叉装车 、凿岩台车、湿喷台车、收获机械 、拖拉机

Product Advantages

- With a full line, Standardized and modular axle design, for quickly meet customized demands
- Wet multi-disc for Increased brake torque capacity
- Wet multi-disc brakes for anti explosion(SAHR).
- Options

★ Flange to flange distance, Wheel mounting dimension, Total ratio
★ Frame MTG: Rigid with pads, Centre oscillation, Offset oscillation
★ Sensor：Steering sensor, Speed sensor, Middle position sensor
★ Brake：Wet multi-disc，Dry disc
★ Differential: Open differential, Limited slip differential, Mechanical diff. lock
★ Steering Angle 25°— 55°

Range Of Applications

- Backhoe loaders、Wheel excavators、Wheel loaders、Telescopic handlers、Rock drilling jumper、Wet spray jumper、Harvesting machines、Tractors

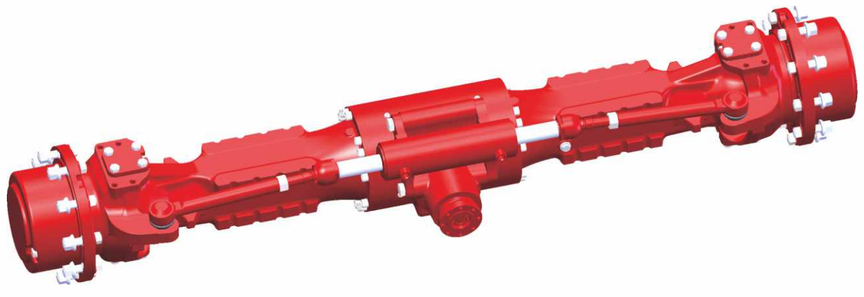

转向驱动桥
Steering drive axle

335-2050

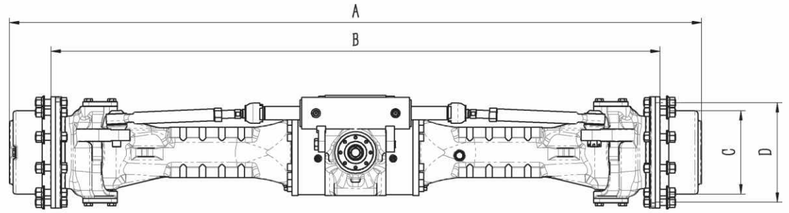

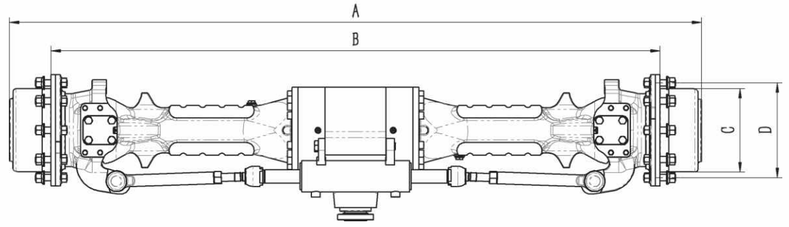

技术参数
Technical Parameter

整桥速比	Total Ratio	20.5 / 22.362 / 29.14
桥总长-A	Planetary Hub Length (mm)	2330 / 2450
轮辐距-B	Flange to Flang (mm)	2050
轮毂安装直径-C	Wheel Pilot Diameter (mm)	Φ280.6h11 / Φ370h11
轮毂螺栓分度圆直径-D	Wheel Bolt Circle Diameter (mm)	335 / 425
动态载荷	Dynamic Load (kg)	25000
最大输出扭矩	Max. Output Touque (N.m)	40000

洛阳汇鹏重工机械有限公司
LUOYANG HUIPENG HEAVY INDUSTRIES MECHINERY CO., LTD
地址：洛阳市孟津区麻屯镇金水大道246号
电话：13526947669　网址：www.lyhuipeng.cn

转向驱动桥
Steering drive axle

335-2310

产品优势

- 产品已系列化、标准化、模块儿化，能快速满足客户的定制需求
- 采用多片湿式制动器，制动扭矩大
- 湿式防爆制动器
- 可选装

★ 轮辐距、轮辋安装尺寸、速比
★ 车架连接方式：刚性连接、摆座连接、顶置摆轴连接
★ 传感器：转角传感器、速度传感器、中位传感器
★ 制动类型：湿式多片制动、干式钳盘制动
★ 差速类型：普通差速器、限滑差速器、差速锁
★ 转向角：25°— 55°

应用范围

- 挖掘装载机、轮式挖掘机、轮式装载机 、伸缩臂叉装车 、凿岩台车、湿喷台车、收获机械 、拖拉机

Product Advantages

- With a full line, Standardized and modular axle design, for quickly meet customized demands
- Wet multi-disc for Increased brake torque capacity
- Wet multi-disc brakes for anti explosion(SAHR).
- Options

★ Flange to flange distance, Wheel mounting dimension, Total ratio
★ Frame MTG: Rigid with pads, Centre oscillation, Offset oscillation
★ Sensor：Steering sensor, Speed sensor, Middle position sensor
★ Brake：Wet multi-disc，Dry disc
★ Differential: Open differential, Limited slip differential, Mechanical diff. lock
★ Steering Angle 25°— 55°

Range Of Applications

- Backhoe loaders、Wheel excavators、Wheel loaders、Telescopic handlers、Rock drilling jumper、Wet spray jumper、Harvesting machines、Tractors

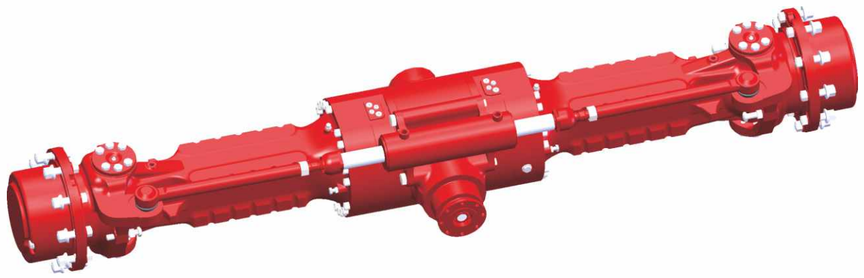

转向驱动桥
Steering drive axle

335-2310

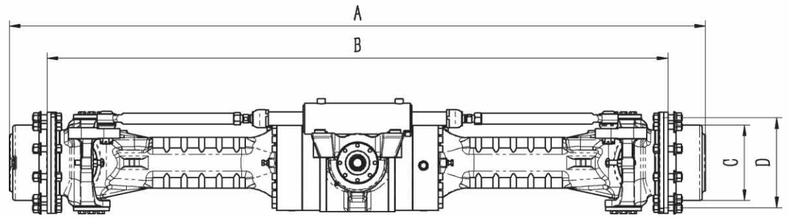

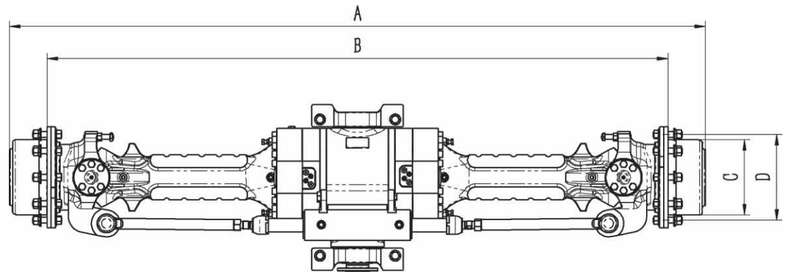

技术参数
Technical Parameter

整桥速比	Total Ratio	20.5 / 11.598 / 16.364 / 25.8
桥总长-A	Planetary Hub Length (mm)	2590
轮辐距-B	Flange to Flang (mm)	2310
轮毂安装直径-C	Wheel Pilot Diameter (mm)	Φ280.6h11
轮毂螺栓分度圆直径-D	Wheel Bolt Circle Diameter (mm)	335
动态载荷	Dynamic Load (kg)	25000
最大输出扭矩	Max. Output Touque (N.m)	40000

洛阳汇鹏重工机械有限公司
LUOYANG HUIPENG HEAVY INDUSTRIES MECHINERY CO., LTD
地址：洛阳市孟津区麻屯镇金水大道246号
电话：13526947669　网址：www.lyhuipeng.cn

刚性驱动桥
Rigid drive axle

500-1850

产品优势

- 产品已系列化、标准化、模块儿化，能快速满足客户的定制需求
- 采用多片湿式制动器，制动扭矩大
- 湿式防爆制动器
- 可选装
- ★ 轮辐距、轮辋安装尺寸、速比
- ★ 车架连接方式：刚性连接，摆座连接，顶置摆轴连接
- ★ 制动类型：湿式多片制动，干式钳盘制动
- ★ 差速类型：普通差速器，限滑差速器，差速锁

Product Advantages

- With a full line, Standardized and modular axle design, for quickly meet customized demands
- Wet multi-disc for Increased brake torque capacity
- Wet multi-disc brakes for anti explosion(SAHR)
- Options
- ★ Flange to flange distance, Wheel mounting dimension, Total ratio
- ★ Frame MTG: Rigid with pads, Centre oscillation, Offset oscillation
- ★ Brake：Wet multi-disc，Dry disc
- ★ Differential: Open differential, Limited slip differential, Mechanical diff. lock

应用范围

- 挖掘装载机、轮式挖掘机、轮式装载机 、伸缩臂叉装车 、凿岩台车、湿喷台车、收获机械 、拖拉机

Range Of Applications

- Backhoe loaders、Wheel excavators、Wheel loaders、Telescopic handlers、Rock drilling jumper、Wet spray jumper、Harvesting machines、Tractors

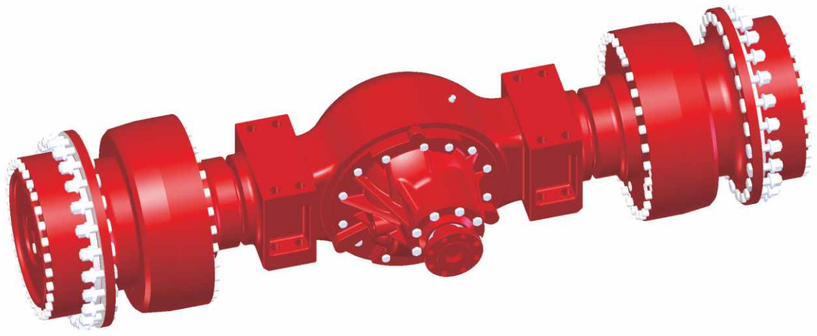

刚性驱动桥
Rigid drive axle

500-1850

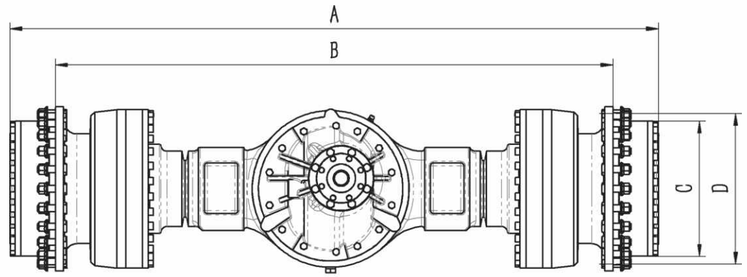

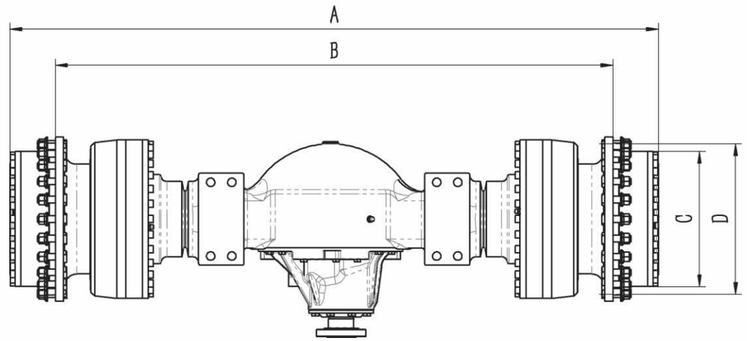

技术参数
Technical Parameter

整桥速比	Total Ratio	29.25
桥总长-A	Planetary Hub Length (mm)	2152
轮辐距-B	Flange to Flang (mm)	1850
轮毂安装直径-C	Wheel Pilot Diameter (mm)	Φ450h9
轮毂螺栓分度圆直径-D	Wheel Bolt Circle Diameter (mm)	500
动态载荷	Dynamic Load (kg)	40000
最大输出扭矩	Max. Output Touque (N.m)	/

洛阳汇鹏重工机械有限公司
LUOYANG HUIPENG HEAVY INDUSTRIES MECHINERY CO., LTD

地址：洛阳市孟津区麻屯镇金水大道246号
电话：13526947669　网址：www.lyhuipeng.cn