SatMate

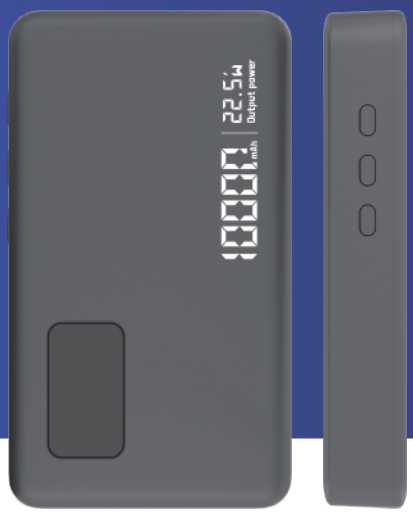

SGM-P1

It is an intelligent security terminal designed specifically for employees of overseas institutions. It integrates core functions such as satellite communication and terrestrial network connectivity, data encryption, precise positioning, one-touch SOS, and trajectory tracking. It can operate independently and can also connect to smartphones via Bluetooth to expand its applications.

SatMate

More than a power bank, it is a global communication assurance terminal—keeping connectivity and power online at all times.

Three core capabilities:

1. Integrates satellite communication and a power bank in one device, ensuring uninterrupted communication and continuous device power in areas without public network coverage;
2. Provides global positioning, trajectory tracking, and emergency SOS capabilities to safeguard personnel safety and asset management;
3. Supports Bluetooth connection to smartphones for expanded applications, while also capable of standalone operation—lightweight, portable, and ready for rapid deployment anytime, anywhere.

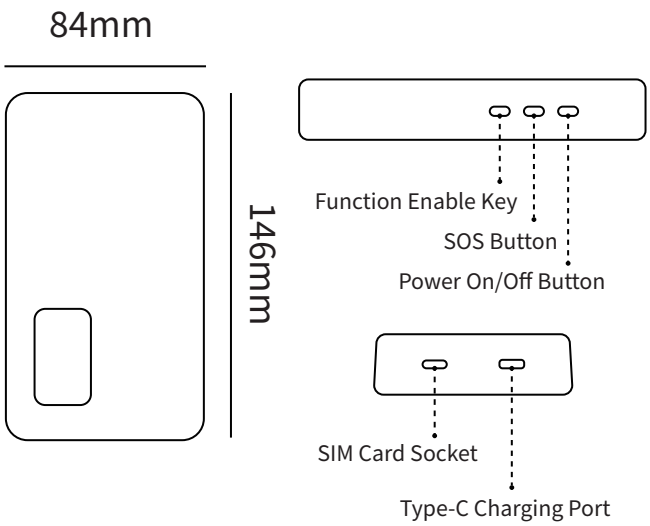

Use Cases



Overseas Project On-Site Assignment



Cross-border business travel



Outdoor Adventures

As a next-generation product designed for personal safety and emergency communication scenarios, this device integrates a high-capacity energy storage power supply with a 5G NTN communication module. Without the need to replace your phone, it enables ordinary smartphones to gain two-way satellite short message capability via Bluetooth connection. In extreme environments, it can perform functions such as continuous SOS beacon transmission, making it suitable for personal carry by those who need dual assurance of communication and power, including cross-border business travelers, overseas project onsite personnel, outdoor adventurers, and emergency support teams.

SpaceIoT

产品特色

- Global Service: Provides all-weather satellite services to users worldwide (excluding the Arctic and Antarctic regions).
- Long Standby: Up to one week of extended standby, letting you go further.
- One-Key SOS: One touch sends an SOS message and location information to your designated emergency contacts.
- Two-Way Communication: Supports not only remote data upload to the server but also allows the device to receive commands and information from the server, enabling near-real-time two-way data exchange.
- Low Latency: Through optimization of communication protocols, communication latency is significantly reduced, meeting the needs of time-sensitive communication scenarios and ensuring timely data transmission and processing.
- Low Power Consumption: Adopts advanced low-power design to greatly reduce energy consumption while ensuring communication efficiency, ensuring long-term stable operation of the system.
- Bluetooth Pairing: Compatible with all smartphones; simply pair via Bluetooth to instantly connect your phone to satellite.
- Built-in Antenna: Ready to use without satellite alignment.

性能参数

Performance Indicators	Detailed Specifications
Product Dimensions	135 x 75 x 29 mm
Bluetooth Version	Bluetooth 5.0
Battery Capacity	10000mAh 37Wh
Charging Interface	Type-C, fast charging, max 22.5W
Standby Time	One week
Positioning Mode	BeiDou Dual-Frequency
Network Coverage	Global (excluding the North and South Poles).
SIM Card Type	Nano SIM Card

BD@spaceiot.com.cn
www.spaceiot.com.cn
Address: Room 5008, Tower D, Baosheng Plaza, Haidian District, Beijing

Download the App

WeChat Official