STEERING

S10, S20 Technical Information

WHITE

together in motion

White is a leading global provider of motor and steering solutions that power the evolution of mobile and industrial applications around the world.

Contents:

Chapter 1 General Information 5

Description and Advantages 6
Steering Control Units 6

Hydraulic Circuit Explanation 6
Neutral Circuits: Open Center and Open Center 6
Power Beyond 6
Neutral Circuits: Closed Center 7
Closed Center with Neutral Bleed 7
Neutral Circuits: Load Sensing 8
Work Circuits: Non-Load Reaction and Load Reaction 10

Valve Description 11

Chapter 2 Special Features and Application 12

Manual Steering 13
Description 13

Two-Speed 13
Description 13
Dual Steering Modes 13
Benefits 14
Features 14
Applications 14

Dual Displacement 14
Description 14

Chapter 3 Technologies 16

Q-Amp (Flow Amplification) for Load Sensing Circuits 17
Description 17
Features 17
Applications 18

Wide Angle 18
Descriptions 18

Cylinder Damping 19
Description 19
Features 19
Benefits 19
Applications—Large Articulated Vehicles 19

VersaSteer 19
Description 19
Dual Steering Modes 19
Quick Steering 19
Benefits 20
Features 20
VersaSteer System Components 20

STC Direct Porting 21
Benefits 21

Chapter 4 Steering Control Units - Series 10 22

Product Description 23
Benefits 23
Features 23

WHITE can accept no responsibility for possible errors in catalogues, brochures, and other printed material. WHITE reserves the right to alter its products without notice. This also applies to products already on order provided that such alterations can be made without subsequent changes being necessary in specifications already agreed.

All trademarks in this material are the property of the respective companies. WHITE and the WHITE logotype are trademarks of WHITE Drive Motors & Steering LLC and WHITE Drive Motors and Steering Sp. z o.o..

All rights reserved.

Applications *23*

Model Code — Ordering Information 24

Installation Drawing 26

Port And Mounting Thread Combinations *26*

Sectional Drawing and Integral Valves 28

Performance Data 28

Cylinder Relief Valve *28*

Inlet Relief Valve *28*

Anti-Cavitation Valve *28*

Input Torque *28*

Steering Control Units— Series 10 Dual Displacement 29

Installation Drawing *29*

Port And Mounting Thread Combinations *29*

Chapter 5 Steering Control Units—Series 20 30

Product Description 31

Features *31*

Applications Articulated Vehicles *31*

Rigid Frame Vehicles *31*

Model Code – Ordering Information 32

Installation Drawing 34

Installation Drawing (Load Sense Relief Option) 35

Sectional Drawing and Integral Valves 35

Performance Data 36

Cylinder Relief Valve Pressure *36*

Input Torque *36*

Figures 37

Tables 38

WHITE can accept no responsibility for possible errors in catalogues, brochures, and other printed material. WHITE reserves the right to alter its products without notice. This also applies to products already on order provided that such alterations can be made without subsequent changes being necessary in specifications already agreed.

All trademarks in this material are the property of the respective companies. WHITE and the WHITE logotype are trademarks of WHITE Drive Motors & Steering LLC and WHITE Drive Motors and Steering Sp. z o.o..

All rights reserved.

Chapter 1
General Information

Topics:

- *Description and Advantages*
- *Hydraulic Circuit Explanation*
- *Valve Description*

WHITE can accept no responsibility for possible errors in catalogues, brochures, and other printed material. WHITE reserves the right to alter its products without notice. This also applies to products already on order provided that such alterations can be made without subsequent changes being necessary in specifications already agreed.

All trademarks in this material are the property of the respective companies. WHITE and the WHITE logotype are trademarks of WHITE Drive Motors & Steering LLC and WHITE Drive Motors and Steering Sp. z o.o..

All rights reserved.

Description and Advantages

Steering Control Units

The Steering control unit (SCU) is fully fluid linked. This means there is no mechanical connection between the steering unit, the pump and the steering cylinders. The unit consists of a manually operated directional control servo valve and feedback meter element in a single body. It is used principally for fluid linked power steering systems, but it can be used for some servo-type applications or any application where visual positioning is required. The close coupled, rotary action valve performs all necessary fluid directing functions with a small number of moving parts. The manually actuated valve is coupled with the mechanical drive to the meter gear. The control is lubricated and protected by the power fluid in the system and can operate in many environments.

Steering control units offer the following advantages:

- Minimizes steering linkage—reduces cost, provides flexibility in design.
- Provides complete isolation of load forces from the control station—provides operator comfort.
- Provides continuous, unlimited control action with very low input torque.
- Provides a wide selection of control circuits and meter sizes.
- Can work with many kinds of power steering pumps or fluid supply.

	SERIES 10 (200-XXXX-XXX, 220-XXXX-XXX)		SERIES 20 (236-XXXX-XXX)	
Displacement	58.7 - 739 cm^3/r	3.58 - 45.1 in^3/r	60 - 985 cm^3/r	3.6 - 60 in^3/r
Flow	11 - 76 l/min	3 - 20 GPM	38 - 114 l/min	10 - 30 GPM
Pressure	275 bar	4000 PSI	241 bar	3500 PSI

Table 1 Series 10 & Series 20

Hydraulic Circuit Explanation

Neutral Circuits: Open Center and Open Center Power Beyond

Open Center

- Simplest, most economical system
- Uses a fixed displacement pump
- In neutral position pump and tank are connected
- Most suitable on smaller type vehicles

Open Center Power Beyond

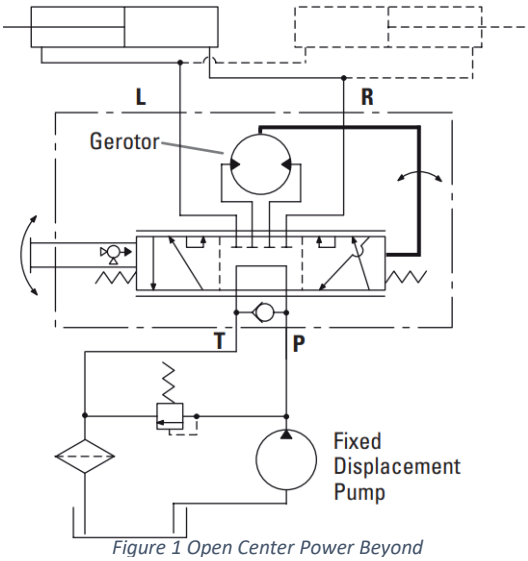

Figure 1 Open Center Power Beyond

The power beyond the steering control unit supplies steering and auxiliary valve functions. The power beyond unit is used on medium pressure, open center (fixed displacement pump) systems. When not steering, the power beyond unit directs all inlet flow to the auxiliary circuit. However once steering is initiated, part of the auxiliary flow is diverted to steering. Since steering has priority, all flow, if required, will be di- verted to steering. The tank port of the steering unit has flow only when steering is operated. Thus, flow out of the auxiliary ("PB") port and the tank port will fluctuate or stop depending on steering input.

WHITE can accept no responsibility for possible errors in catalogues, brochures, and other printed material. WHITE reserves the right to alter its products without notice. This also applies to products already on order provided that such alterations can be made without subsequent changes being necessary in specifications already agreed.

All trademarks in this material are the property of the respective companies. WHITE and the WHITE logotype are trademarks of WHITE Drive Motors & Steering LLC and WHITE Drive Motors and Steering Sp. z o.o..

All rights reserved.

The following special considerations should be addressed when applying power beyond steering:

- Auxiliary valves (connected to PB) must be open center type. Slight bump or kick may be felt in steering wheel when auxiliary functions are activated during steering operations.
- Pump flow not used for steering is available at power beyond (PB) outlet, except at steering stops where total pump flow goes over the system relief valve. Avoid auxiliary functions that require constant flow while steering.
- Flow is only directed to the tank port when steering is operated. Avoid systems where return flow from tank port is used for auxiliary functions.
- Inlet pressure to the steering unit will be higher of steering system pressure or auxiliary valve pressure.
- Generally avoid systems where heavy use of auxiliary functions occur while steering.

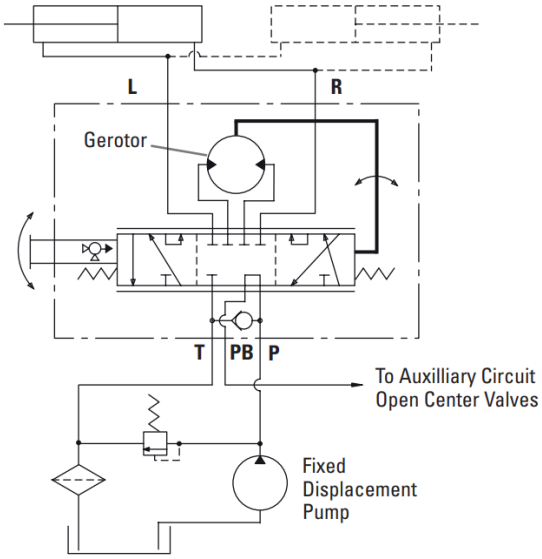

Figure 2 Open Center Power Beyond

Applications

- Lawn and Garden Equipment
- Utility Vehicles

Neutral Circuits: Closed Center

Closed Center

- Uses a pressure compensated variable displacement pump
- In neutral position pump and tank are disconnected
- Most suitable on large construction equipment

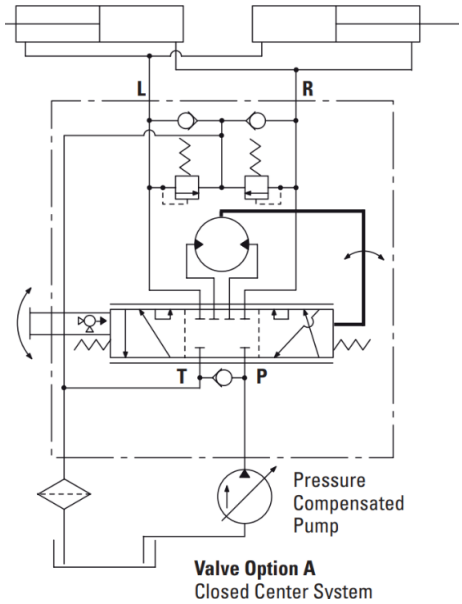

Figure 3 Valve Option A (Closed Center System)

Closed Center with Neutral Bleed

Neutral Bleed Feature

Closed Center Steering Control Units are available with and without neutral bleed feature. Most applications may not require the bleed feature, however, the maximum temperature differential between components within the steering circuit must not exceed specification (50° F or 28° C). Order unit with the bleed feature if the temperature differential may exceed this limit. The neutral bleed feature allows a small flow of fluid to pass through the unit when in neutral to reduce the thermal differential.

Typical applications where neutral bleed is required are:

- Remote steering position from power source.
- Extended engine idle operation when vehicle is parked.
- High duty cycle operation sharing a common reservoir with the steering circuit.

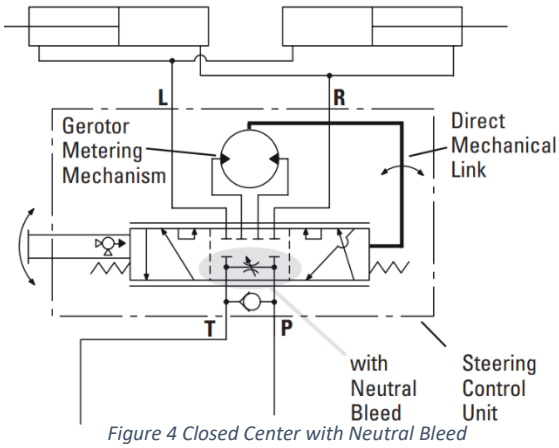

Figure 4 Closed Center with Neutral Bleed

WHITE can accept no responsibility for possible errors in catalogues, brochures, and other printed material. WHITE reserves the right to alter its products without notice. This also applies to products already on order provided that such alterations can be made without subsequent changes being necessary in specifications already agreed.

All trademarks in this material are the property of the respective companies. WHITE and the WHITE logotype are trademarks of WHITE Drive Motors & Steering LLC and WHITE Drive Motors and Steering Sp. z o.o..

All rights reserved.

Applications

- Construction Industry

Neutral Circuits: Load Sensing

Load Sensing Circuits

Load sensing power steering uses conventional or load sensing power supplies to achieve load sensing steering. The use of a load sensing steering unit and a priority valve in a normal power steering circuit offers the following advantages:

- Provides smooth pressure compensated steering be- cause load variations in the steering circuit do not affect axle response or maximum steering rate.
- Provides true power beyond system capability by splitting the system into two independent circuits. Pressure transients are isolated in each circuit. Only the flow required by the steering maneuver goes to the steering circuit. Flow not required for steering is available for use in the auxiliary circuits.
- Provides reliable operation because the steering circuit always has flow and pressure priority.

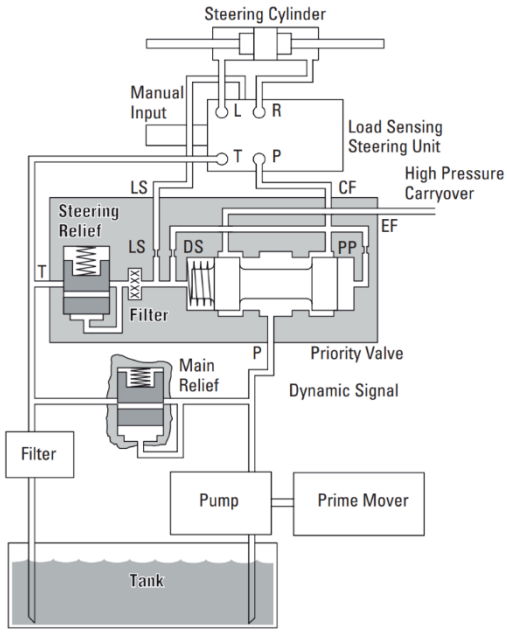

LS— Load Sensing
DS— Dynamic Signal
PP— Pilot Pressure
CF— Control Flow

Figure 5 Neutral Circuits: Load Sensing

Load sensing steering control units and priority valves can be used with open center, closed center or load sensing systems. Use in an open center system with a fixed displacement pump or a closed center system with a pressure compensated pump, offers many of the features of a load sensing system. Excess flow is available for auxiliary circuits.

Listed below are the components of a typical load sensing control circuit and a brief application description.

Pump - May be fixed displacement, pressure compensated, or flow and pressure compensated design.

Priority Valve - Sized for design pressure drop at maximum pump output flow rate and priority flow requirements. The minimum control pressure must assure adequate steering flow rate and must be matched with the steering control unit. A dynamic signal priority valve must be used with a dynamic signal steering control unit.

Steering Control Unit - Designed for specific rated flows and control pressures. It must be matched with a control pressure in the priority valve to obtain maximum steering rates. Higher flow rates require higher control pressures. Neutral internal bleed assures component temperature equalization.

LS Line - A LS line is always needed to sense pressure downstream from the variable control orifice in the steering control unit. This is balanced by an internal passage to the opposite side of the priority control spool. The total system performance depends on careful consideration of the control pressure chosen and pressure drop in the CF line.

Steering Relief Valve - Must be factory set at least 10 bar [145 PSI] above the maximum steering cylinder pressure requirement. Most of the flow will be directed to the auxiliary circuit (EF) when the relief setting is exceeded.

System Main Relief Valve—A pressure relief valve for the auxiliary circuit and/or a main safety valve for the protection of the pump is recommended and sized for the maximum pump output flow rate. If a main relief valve is used, it must be set above the priority circuit steering relief valve pressure setting.

WHITE can accept no responsibility for possible errors in catalogues, brochures, and other printed material. WHITE reserves the right to alter its products without notice. This also applies to products already on order provided that such alterations can be made without subsequent changes being necessary in specifications already agreed.

All trademarks in this material are the property of the respective companies. WHITE and the WHITE logotype are trademarks of WHITE Drive Motors & Steering LLC and WHITE Drive Motors and Steering Sp. z o.o..

All rights reserved.

Load Sensing Circuits – Signal Systems

Two types of load sensing signal systems are available—Dynamic and Static.

Dynamic Signal—Used for more difficult applications. The dynamic signal systems offer the following benefits:

- Faster steering response.
- Improved cold weather start-up performance.
- Increased flexibility to solve problems related to system performance and stability.

Dynamic Signal—Open Center Pump

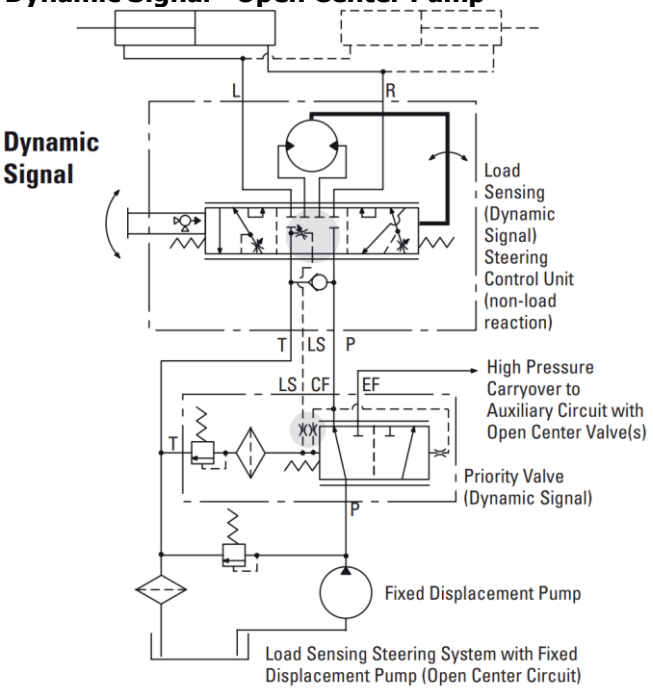

Figure 6 Dynamic Signal—Open Center Pump

Dynamic Signal—Load Sensing Pump

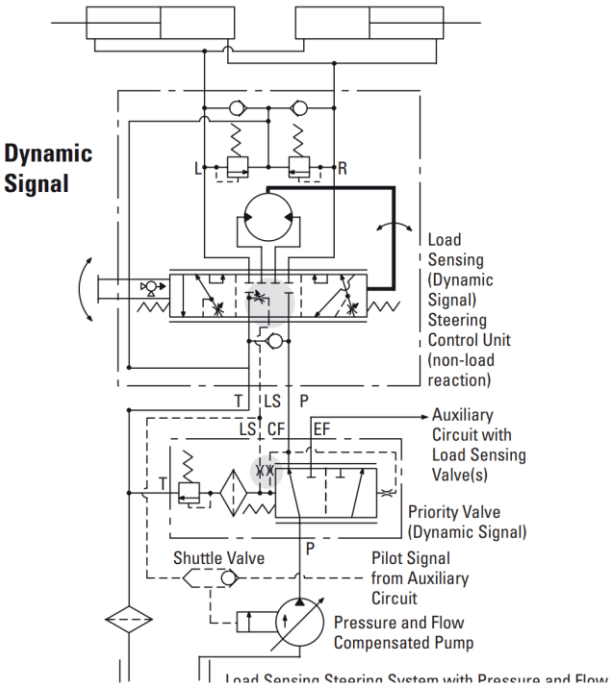

Figure 7 Dynamic Signal—Load Sensing Pump

Static Signal—Open Center Pump

Static Signal—Used for conventional applications where response or circuit stability is not a problem. The load sensing pilot line should not exceed 2 meters [6 feet] in length.

WHITE can accept no responsibility for possible errors in catalogues, brochures, and other printed material. WHITE reserves the right to alter its products without notice. This also applies to products already on order provided that such alterations can be made without subsequent changes being necessary in specifications already agreed.

All trademarks in this material are the property of the respective companies. WHITE and the WHITE logotype are trademarks of WHITE Drive Motors & Steering LLC and WHITE Drive Motors and Steering Sp. z o.o..

All rights reserved.

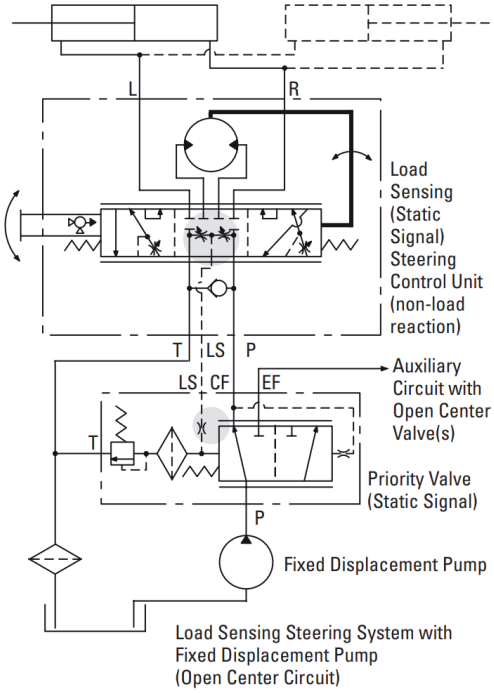

Figure 8 Static Signal

Work Circuits: Non-Load Reaction and Load Reaction

Non-Load Reaction

A non-load reaction steering unit blocks the cylinder ports in neutral, holding the axle position whenever the operator releases the steering wheel.

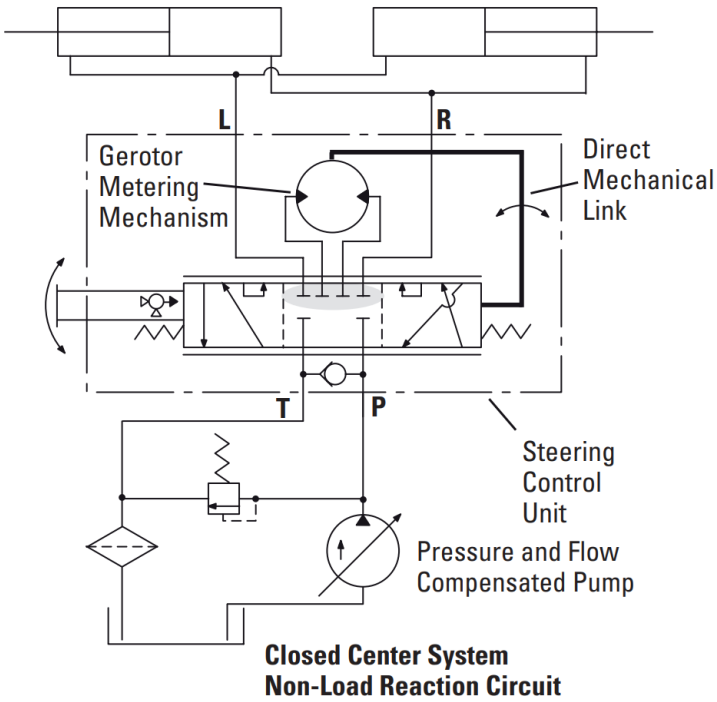

Figure 9 Closed Center System (Non-Load Reaction Circuit)

Load Reaction

A load reaction steering unit couples the cylinder ports internally (in the neutral position) with the meter gear set. Axle forces are then allowed to return the steering wheel to its approximate original position. Comparable to automobile steering, gradually releasing the wheel mid turn will allow the steering wheel to spin back as the vehicle straightens.

WHITE can accept no responsibility for possible errors in catalogues, brochures, and other printed material. WHITE reserves the right to alter its products without notice. This also applies to products already on order provided that such alterations can be made without subsequent changes being necessary in specifications already agreed.

All trademarks in this material are the property of the respective companies. WHITE and the WHITE logotype are trademarks of WHITE Drive Motors & Steering LLC and WHITE Drive Motors and Steering Sp. z o.o..

All rights reserved.

The cylinder system used with load reaction units **must have equal oil volume** displaced in both directions. The cylinders should be a parallel pair (as shown) or one double rod end unit. **Do not use with a single unequal area cylinder system.**

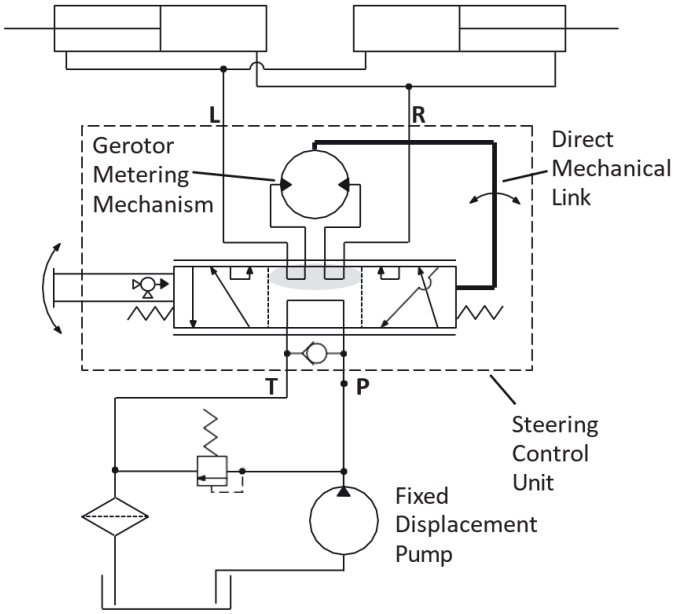

Figure 10 Open Center System Load Reaction Circuit

Valve Description

Integral valves are available for the steering control unit. Included are: Inlet Relief Valve, Cylinder Port Shock Valves, LS-Relief Valve, and Anti-Cavitation Valves for cylinder ports. In addition, a Manual Steering Check Valve for limited manual steering is included. The integral valves eliminate the need for a separate valve block and provide versatility to meet any steering circuit standard.

1. **Anti-cavitation check valve for cylinder ports**—(R & L) protects steering circuit against vacuum (cavitation) conditions.
2. **Cylinder Port Relief Valves**—(R & L) protects hoses against pressure surge created by ground forces on the steered axle.
3. **Manual Steering Check Valve**—converts unit to a hand operated pump for limited manual steering. Included in all units except Series 20.**
4. **Inlet Relief Valve**—limits maximum pressure drop across the steering unit protecting the steering circuit.
5. **Inlet Check Valve**—prevents oil from returning through the steering unit when pressure on the cylinder side is greater than pressure on the inlet side to prevent steering wheel kick.
6. **LS-Relief Valve**—Limits maximum pressure in the steering circuit (LS units only)

***Steering units with displacements larger than 185 cm³/r [11.3 in³/r] may require a separate power source for limited operation.*

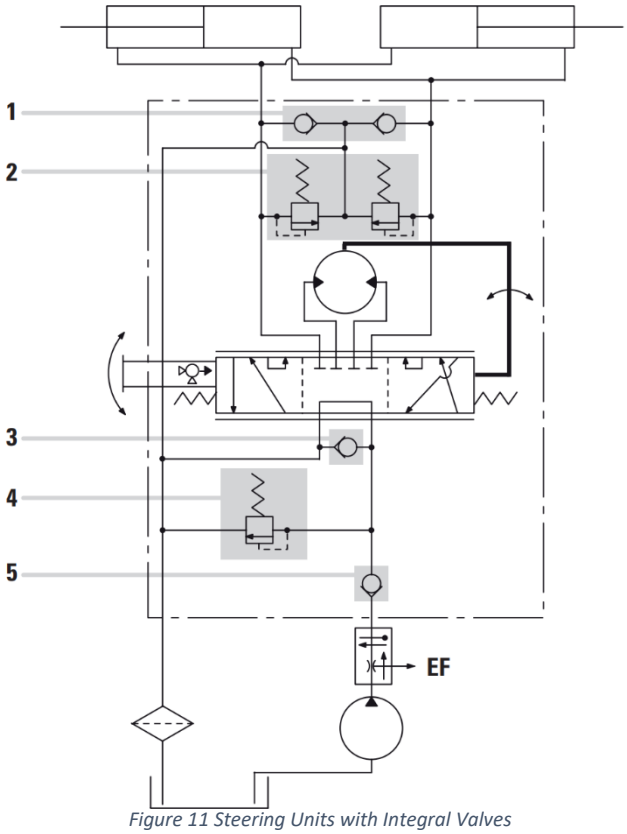

Figure 11 Steering Units with Integral Valves

WHITE can accept no responsibility for possible errors in catalogues, brochures, and other printed material. WHITE reserves the right to alter its products without notice. This also applies to products already on order provided that such alterations can be made without subsequent changes being necessary in specifications already agreed.

All trademarks in this material are the property of the respective companies. WHITE and the WHITE logotype are trademarks of WHITE Drive Motors & Steering LLC and WHITE Drive Motors and Steering Sp. z o.o..

All rights reserved.

Chapter 2
Special Features and Application

Topics:

- *Manual Steering*
- *Two-Speed*
- *Dual Displacement*

WHITE can accept no responsibility for possible errors in catalogues, brochures, and other printed material. WHITE reserves the right to alter its products without notice. This also applies to products already on order provided that such alterations can be made without subsequent changes being necessary in specifications already agreed.

All trademarks in this material are the property of the respective companies. WHITE and the WHITE logotype are trademarks of WHITE Drive Motors & Steering LLC and WHITE Drive Motors and Steering Sp. z o.o..

All rights reserved.

Manual Steering

Description

The steering control unit can provide steering flow when the pump or engine fails. It will pump oil through the meter (gerotor) as the operator applies input or torque to the steering wheel which provides limited manual steering.

Use of Graph

1. Determine steering work port pressure required to perform the desired steering maneuver from vehicle test data. This defines the approximate manual steering pressure level required. Find this value on the vertical axis and construct a horizontal line on the graph.
2. Find the input torque limit on the horizontal axis. Follow him vertically until it crosses the required pressure line of step 1.
3. The maximum steering unit displacement is identified by the first angled line to the left of this intersection.

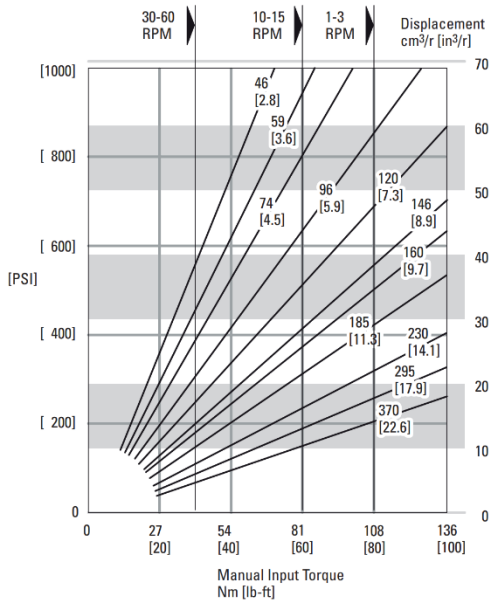

Figure 12 Manual steering

1) Maximum flow less than 7,6 l/min [2 GPM].
2) Actual steering pressures required and manual steering capabilities must be verified with vehicle testing

The above curves are intended as a design guide only.

Two-Speed

Description

Two-Speed technology offers two operator selectable metered modes at any time, with the touch of a button or the flip of a switch and provides the operator flexibility to significantly improve the overall steering experience. Two-Speed technology is available on the Series 10 Steering Control Unit (SCU).

Dual Steering Modes

Typically, the gerotor between the SCU housing and the shift valve is the smaller gerotor (first gerotor). The shift valve is activated by the operator, which allows or prevents flow to the second gerotor. A separate solenoid valve provides the pressure pilot signal to shift the aforementioned valve. The OEM will define and provide the operator switch to activate the solenoid valve.

Metered Steering Mode 1

The steering unit operates the same as a traditional hydro- static steering control unit. Steering (flow) is a function of steering wheel rotations (rpm). Metered (gerotor) steering provides precise, responsive, and smooth steering. All the flow is metered by the first gerotor, resulting in a greater number of turns lock-to-lock. In case of pressure loss, the shift valve automatically prevents flow to the second gerotor and emergency steering is available via the first gerotor.

Metered Steering Mode 2

The steering unit operates the same as a traditional hydrostatic steering control unit, except the flow is metered for a combined displacement of two gerotors. As with Mode 1, steering (flow) is a function of steering wheel rotations. As the total displacement per rotation is the sum of the two gerotor displacements, the number of turns lock-to-lock may be significantly decreased. Operator effort is greatly reduced during the work cycle. The number of turns lock-to-lock could go down to 0.5, where the ratio of the two gerotor displacements could vary from 1:1 to as high as 5:1, providing great flexibility in the design.

WHITE can accept no responsibility for possible errors in catalogues, brochures, and other printed material. WHITE reserves the right to alter its products without notice. This also applies to products already on order provided that such alterations can be made without subsequent changes being necessary in specifications already agreed.

All trademarks in this material are the property of the respective companies. WHITE and the WHITE logotype are trademarks of WHITE Drive Motors & Steering LLC and WHITE Drive Motors and Steering Sp. z o.o..

All rights reserved.

Benefits

- Manual steering capability in unpowered mode (“emergency steering”)
- Steering flow is always proportional to steering speed
- Allows for excellent roadability and operator selectable quick-steer for work cycles

Features

- Open Center, Load Sense
- All Integral Valves
- Wide Angle
- Max System pressure: 241 Bar [3500 psi]

Applications

- All Ackerman Steering
- Tractors, Telehandlers, Sweepers, Forestry Equipment, Backhoes, Loaders
- Sprayers, Combines, Motor Graders

Dual Displacement

Description

The dual displacement steering control unit allows manufacturers of off road vehicles to retain manual steering capabilities while reducing the number of components in their system. By using two displacements in one unit, we offer a better solution to manually steer a vehicle in an unpowered mode without the need of a back-up power system—resulting in a more economical machine.

The dual displacement steering unit uses two gerotors and a pressure controlled logic valve. The logic valve switches between two displacements, one displacement for manual steering and the total of both displacements for powered operation. The logic valve is spring returned to the smaller manual displacement when inlet pressure falls below 8 bar [120 psi]. Above 8 bar [120 psi] the logic valve connects both gerotors to provide full powered displacement.

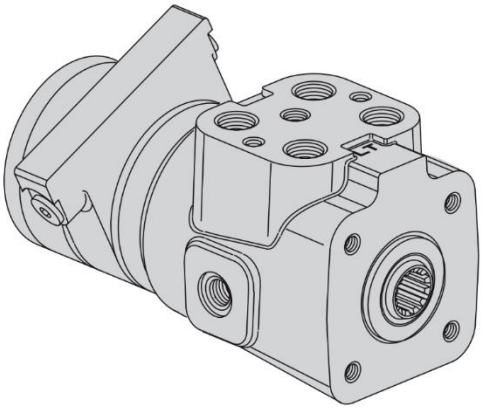

Figure 13 Dual Displacement

Manual steering capabilities in unpowered mode

- Eliminates the need of a back-up emergency system.
- Engages the small displacement in an unpowered mode and allows manual steering.
- Allows vehicles to meet ISO/TUV road regulations without the need of the currently used emergency system.

Performance in powered mode

- Both gerotors are engaged to steer the vehicle.
- Same performance as other White steering units.

Additional Features

- Steering circuit: Load Sensing Dynamic Signal
- Max. system pressure: 241 bar [3500 psi].
- Valve options and other features: same as those available on Series 10 (single displacement) units

WHITE can accept no responsibility for possible errors in catalogues, brochures, and other printed material. WHITE reserves the right to alter its products without notice. This also applies to products already on order provided that such alterations can be made without subsequent changes being necessary in specifications already agreed.

All trademarks in this material are the property of the respective companies. WHITE and the WHITE logotype are trademarks of WHITE Drive Motors & Steering LLC and WHITE Drive Motors and Steering Sp. z o.o..

All rights reserved.

Displacement Chart

Gerotor 1 Manual Displ.		Gerotor 1 and 2 Powered Displ.	
in³/rev	*cm³/rev*	*in³/rev*	*cm³/rev*
3.6	60	9.5	156
		10.9	179
		12.5	205
		13.3	218
		14.9	244

Table 2 Displacement Chart

For any other displacement please see your White Representative.

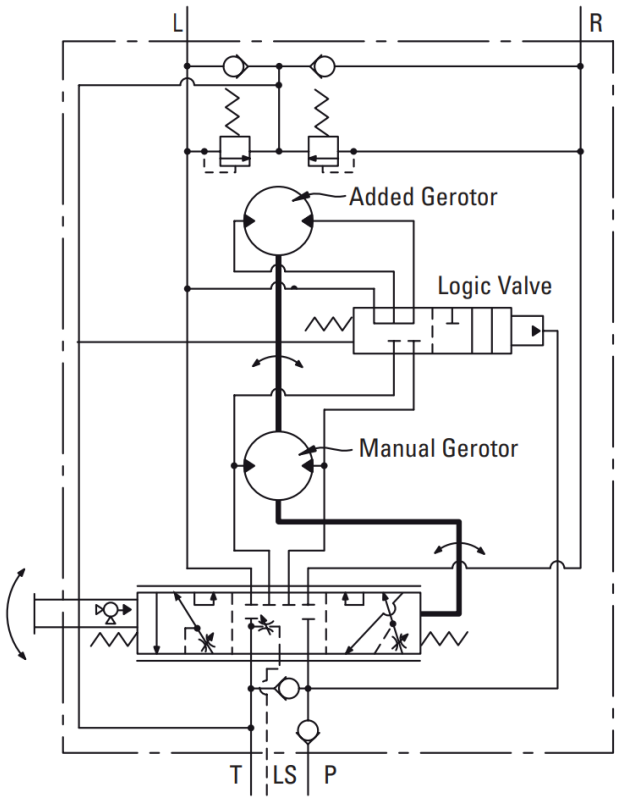

Figure 14 Dual Displacement

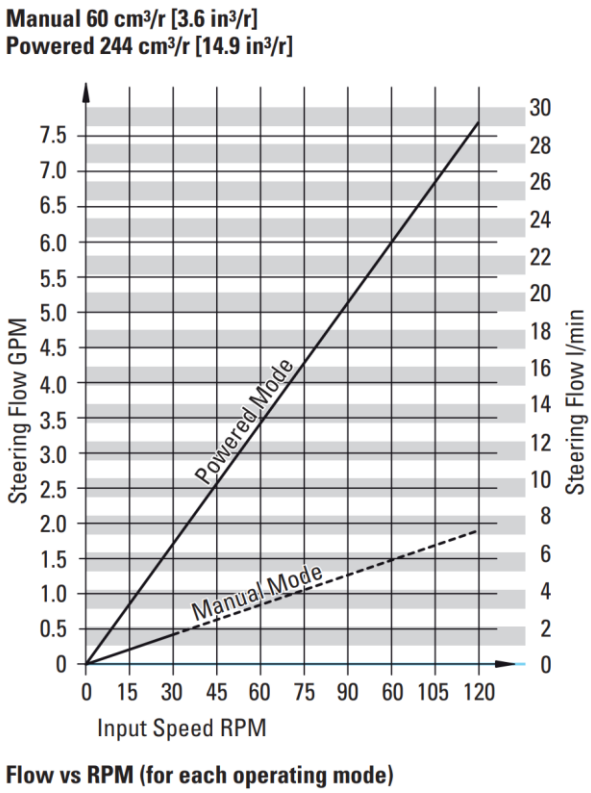

Figure 15 Dual Displacement

WHITE can accept no responsibility for possible errors in catalogues, brochures, and other printed material. WHITE reserves the right to alter its products without notice. This also applies to products already on order provided that such alterations can be made without subsequent changes being necessary in specifications already agreed.

All trademarks in this material are the property of the respective companies. WHITE and the WHITE logotype are trademarks of WHITE Drive Motors & Steering LLC and WHITE Drive Motors and Steering Sp. z o.o..

All rights reserved.

Chapter 3
Technologies

Topics:

- *Q-Amp (Flow Amplification) for Load Sensing Circuits*
- *Wide Angle*
- *Cylinder Damping*
- *VersaSteer*
- *STC Direct Porting*

WHITE can accept no responsibility for possible errors in catalogues, brochures, and other printed material. WHITE reserves the right to alter its products without notice. This also applies to products already on order provided that such alterations can be made without subsequent changes being necessary in specifications already agreed.

All trademarks in this material are the property of the respective companies. WHITE and the WHITE logotype are trademarks of WHITE Drive Motors & Steering LLC and WHITE Drive Motors and Steering Sp. z o.o..

All rights reserved.

Q-Amp (Flow Amplification) for Load Sensing Circuits

Description

Q-Amp steering units have built in variable orifices that provide flow directly to the cylinder without going through the gerotor section. The orifices do not open until after the gerotor begins to rotate and then gradually open until the de- sired flow is achieved which is proportional to the flow going through the gerotor. A typical Q-Amp unit has a ratio of 1.6 : 1 which means the flow of the cylinder is 1.6 times the flow going through the gerotor when turning the steering wheel at medium to fast speeds. (See model code for available ratios.)

Features

- **Variable Ratio**

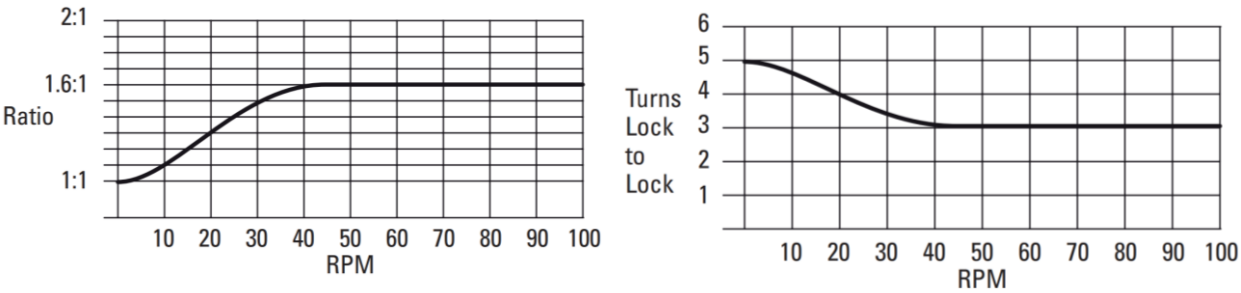

Figure 16 Variable Ratio

- **Manual Steering**
  Steering a vehicle with loss of engine power may not be possible with a large displacement steering control unit (SCU). Q-Amp with manual feature has the smaller displacement required for manual steering and has the additional flow requirement of the larger displacement SCU for power steering.

- **Single Cylinder (Unequal area)**
  On vehicles with one single unequal area cylinder the steering wheel turns lock to lock are more in one direction than the other. When extending the rod, one would get more turns than when retracting it. A different Q-Amp ratio while turning in one direction versus the other can be used to give an equal number of turns lock to lock in each direction.

Conventional Steering Control Unit

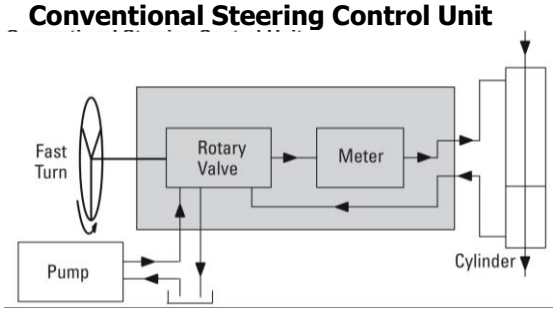

Figure 17 Conventional Steering Control Unit

Q-Amp Steering Control Unit – Fast Turn

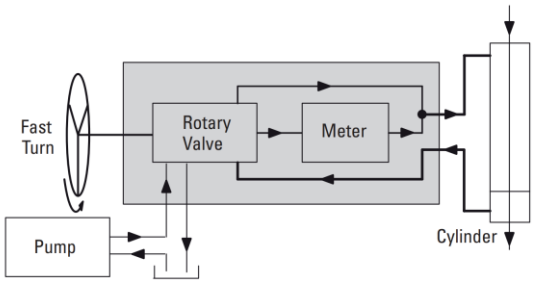

Figure 18 Q-Amp Steering Control Unit – Fast Turn

Q-Amp Steering Control Unit – Slow Turn

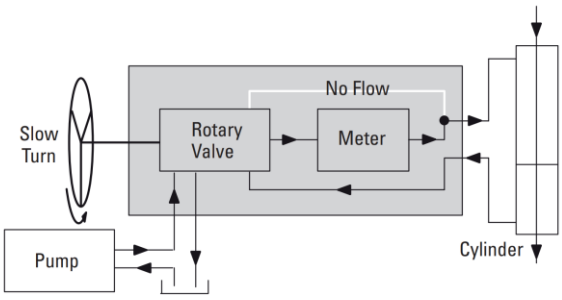

Figure 19 Q-Amp Steering Control Unit – Slow Turn

WHITE can accept no responsibility for possible errors in catalogues, brochures, and other printed material. WHITE reserves the right to alter its products without notice. This also applies to products already on order provided that such alterations can be made without subsequent changes being necessary in specifications already agreed.

All trademarks in this material are the property of the respective companies. WHITE and the WHITE logotype are trademarks of WHITE Drive Motors & Steering LLC and WHITE Drive Motors and Steering Sp. z o.o..

All rights reserved.

Applications

Articulated vehicles such as wheel loaders, log skidders, scrapers, trucks, and similar vehicles can benefit from this feature.

While roading, a slow movement of the steering wheel (input speed), will not overcorrect steering. Increasing input speed will produce the additional steering flow required to quickly change the vehicle's direction.

For example, operating log skidders in the woods requires very quick steering. This same log skidder on the road would be extremely difficult to steer a straight normal course. The variable ratio feature provides good steering in both conditions.

Combines, row crop tractors, and large articulated agricultural tractors also can benefit from this feature when traveling down a field. It will be easier to follow rows or furrows, and still be able to make fast turns at the end of the rows.

Variable Ratio

- Wheel Loaders
- Scrapers
- Articulated AG Tractors
- Articulated Dumpers
- Mine Trucks
- Forestry Equipment
- Rough Terrain Lift Trucks

Variable Ratio with Manual Steering

- AG Tractors
- Small Wheel Loaders
- Rubber Tired Excavators
- Sprayers
- Site Handlers
- Graders
- Combines

Wide Angle

Descriptions

Steering units with wide angle features have been developed to significantly reduce or eliminate the jerky motion of vehicles with articulated steering systems. This has been accomplished by increasing the maximum deflection of the spool relative to the sleeve. Increasing the deflection reduces the gain. This in turn reduces acceleration and jerk levels and provides overall smoother vehicle performance. The steering still responds fast enough so the operator does not notice the reduced gain.

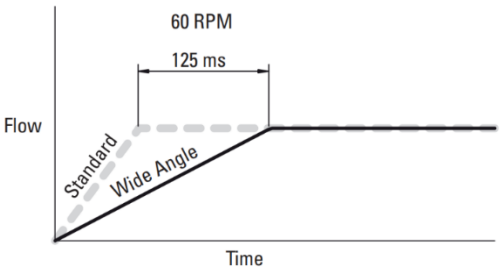

Figure 20 Wide angle

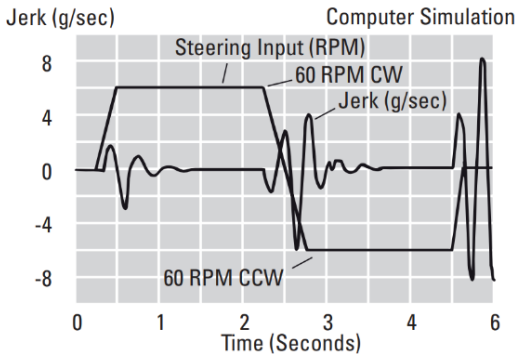

Figure 21 Standard Steering on a 25 Ton Loader

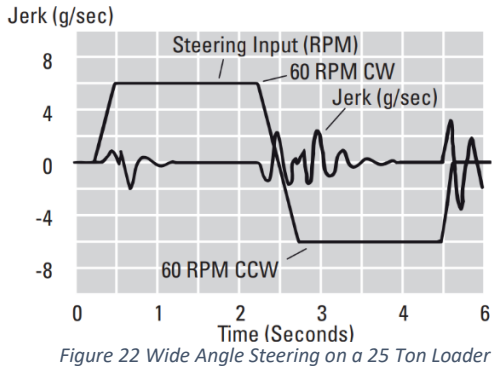

Figure 22 Wide Angle Steering on a 25 Ton Loader

Benefits

- Minimizes jerking motion on medium and large articulated vehicles.
- Jerk reducing valves and accumulators can be eliminated on most vehicles.
- Available on Series 10 and Series 20 (standard).
- Eliminates need for cushion valves

Applications

- Articulated Vehicles

These graphs show a computer simulation of the jerk levels and have been verified by actual vehicle tests.

WHITE can accept no responsibility for possible errors in catalogues, brochures, and other printed material. WHITE reserves the right to alter its products without notice. This also applies to products already on order provided that such alterations can be made without subsequent changes being necessary in specifications already agreed.

All trademarks in this material are the property of the respective companies. WHITE and the WHITE logotype are trademarks of WHITE Drive Motors & Steering LLC and WHITE Drive Motors and Steering Sp. z o.o..

All rights reserved.

Cylinder Damping

Description

Cylinder damping can help smooth the steering action of large articulated vehicles such as loaders, scrapers, and skidders.

These vehicles have overhanging weight with high inertial loads. This energy is dissipated by the cylinder damping orifices which bleed a small amount of flow from the cylinder port to tank.

Cylinder Damping has 3 different levels of application. The number of levels equal to the number of Cylinder Damping (CD) orifices. This technology is available on Series 10 and Series 20. Not all SCUs come with all 3 levels.

Features

1. Level 1: for slightly jerky vehicle (lower flow rates for the steering unit)
2. Level 2: for jerky vehicle
3. Level 3: for severely jerky vehicle (higher flow rates for the steering unit)

Benefits

- Reduces jerking motion on medium and large articulated vehicles.
- Available on the following steering control units (Series 10, 20).
- Damps or stabilizes unstable systems.

Applications—Large Articulated Vehicles

- Wheel Loaders
- Scrapers
- Skidders

Flow Amplification without Cylinder Damping

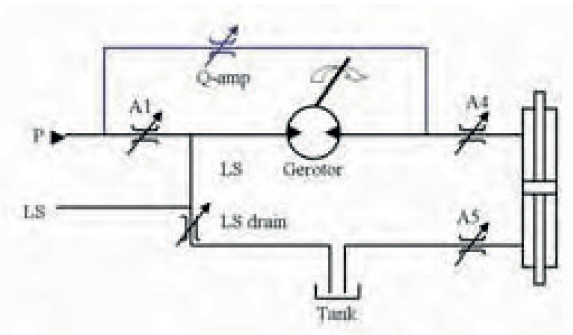

Figure 23 Flow Amplification without Cylinder Damping

Flow Amplification with Cylinder Damping

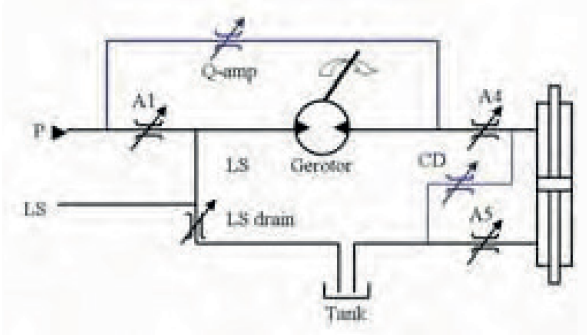

Figure 24 Flow Amplification with Cylinder Damping

VersaSteer

Description

VersaSteer™ technology offers operator-selectable Metered or Quick Steering modes at any time, with the touch of a button or the flip of a switch and provides the operator flexibility to significantly improve the overall steering experience.

Dual Steering Modes

Metered Steering – The steering unit operates the same as a traditional hydrostatic steering control unit. Steering (flow) is a function of steering wheel rotations (rpm). Metered (gerotor) steering provides precise, responsive, and smooth steering.

Quick Steering

Gerotor less (quick) steering provides a much different effect, enabling the operator to put the vehicle in full lock while only turning the steering wheel a few degrees. This is achieved by hydraulically blocking the flow of oil to the gerotor with a shift valve. Full steering flow can be obtained by deflecting the steering wheel ±45° for a Series 10 and ±50° for a Series 20. Operator effort is greatly reduced during the work cycle.

WHITE can accept no responsibility for possible errors in catalogues, brochures, and other printed material. WHITE reserves the right to alter its products without notice. This also applies to products already on order provided that such alterations can be made without subsequent changes being necessary in specifications already agreed.

All trademarks in this material are the property of the respective companies. WHITE and the WHITE logotype are trademarks of WHITE Drive Motors & Steering LLC and WHITE Drive Motors and Steering Sp. z o.o..

All rights reserved.

Benefits

- Provides steering system cost savings by eliminating the need for a separate joystick
- Available on Load Sense steering systems
- Compatible with Integral Valves, Bolt-On Priority Valves, Q-Amp and Cylinder Damping
- Emergency manual steering capability
- Minor size increase – can retrofit to existing vehicles
- Smoother steering with Wide Angle technology

Features

- Dual steering modes in one integrated Steering Control Unit (SCU)
- High pressure rating and flow capabilities
- Compatible with current steering options
- Easily retrofit to existing vehicles
- Proven base technology
- Easy one-touch switch (OEM defined)

VersaSteer System Components

- Steering Control Unit
- Solenoid Shift Valve
- Four –04 hoses
- Electric Switch

Series 10 VersaSteer

Figure 25 Series 10 VersaSteer

Series 20 VersaSteer

Figure 26 Series 20 VersaSteer

Traditional Metered Steering

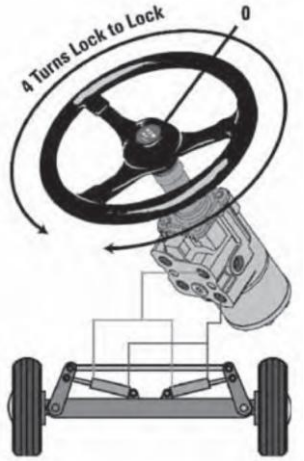

Figure 27 Traditional Metered Steering

Series 10 Quick Steering

Figure 28 Series 10 Quick Steering

Specifications

1. **System Pressure Rating**
   a. 241 Bar [3500 psi] - Series 10
   b. 241 Bar [3500 psi] - Series 20
2. **Back Pressure Rating** - 21 Bar [305 psi]
3. **Flow Rating**
   a. 15 gpm - Series 10
   b. 25 gpm - Series 20

WHITE can accept no responsibility for possible errors in catalogues, brochures, and other printed material. WHITE reserves the right to alter its products without notice. This also applies to products already on order provided that such alterations can be made without subsequent changes being necessary in specifications already agreed.

All trademarks in this material are the property of the respective companies. WHITE and the WHITE logotype are trademarks of WHITE Drive Motors & Steering LLC and WHITE Drive Motors and Steering Sp. z o.o..

All rights reserved.

STC Direct Porting

With the Snap-To-Connect (STC) Direct Porting option, the fitting profile is machined into the SCU housing, eliminating the need for extra STC fittings. This revolutionary porting technology provides leak-proof sealing and has operating pressure capability exceeding 4500PSI (310bar). STC Direct Porting is available with Series 10 Steering Control Units.

Benefits

- STC Direct Ports provide a great opportunity for significant cost savings compared to threaded fittings
- Eliminates the need for assembly tools during installation
- Eliminates installation variability
- Improves ergonomics - reduces installer effort to connect
- Improves serviceability
- High quality, leak-proof seal
- Eliminates connector leakage
- Compact design and overall lighter weight

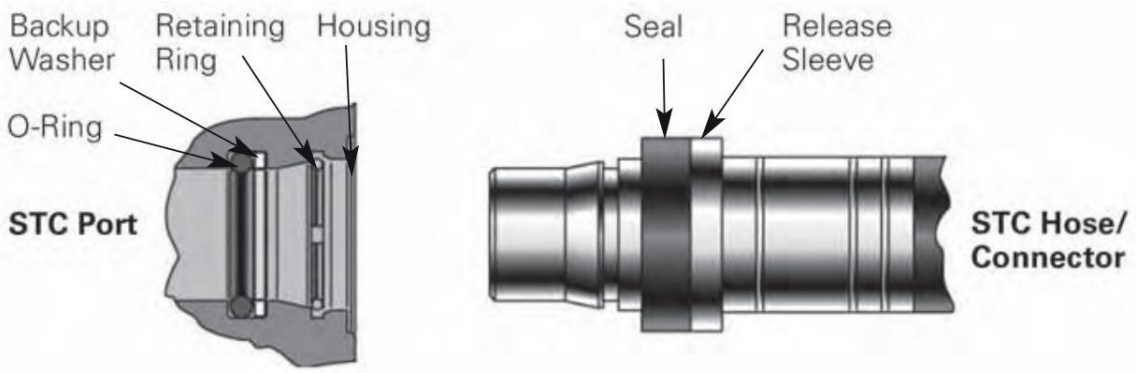

Figure 29 STC Direct Porting

WHITE can accept no responsibility for possible errors in catalogues, brochures, and other printed material. WHITE reserves the right to alter its products without notice. This also applies to products already on order provided that such alterations can be made without subsequent changes being necessary in specifications already agreed.

All trademarks in this material are the property of the respective companies. WHITE and the WHITE logotype are trademarks of WHITE Drive Motors & Steering LLC and WHITE Drive Motors and Steering Sp. z o.o..

All rights reserved.

Chapter 4
Steering Control Units - Series 10

Topics:

- *Product Description*
- *Model Code — Ordering Information*
- *Installation Drawing*
- *Sectional Drawing and Integral Valves*
- *Performance Data*
- *Steering Control Units— Series 10 Dual Displacement*

WHITE can accept no responsibility for possible errors in catalogues, brochures, and other printed material. WHITE reserves the right to alter its products without notice. This also applies to products already on order provided that such alterations can be made without subsequent changes being necessary in specifications already agreed.

All trademarks in this material are the property of the respective companies. WHITE and the WHITE logotype are trademarks of WHITE Drive Motors & Steering LLC and WHITE Drive Motors and Steering Sp. z o.o..

All rights reserved.

Product Description

Series 10 Steering Control Unit (SCU) facilitates hydraulic fluid flow like no other unit on the market. This highly-engineered product is the ultimate SCU for mid-range flow applications.

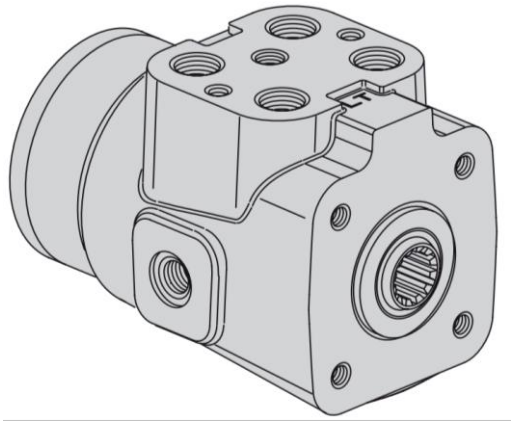

Figure 30 Series 10

Benefits

- The new Series 10 SCU has an unprecedented, continuous pressure rating of 275 bar (4000 psi), making it ideal for heavy-duty equipment, such as construction and agricultural machinery.
- Its **high-pressure rating** reduces overall equipment costs, since smaller cylinder sizes can be assigned into the system.
- The new Series 10 incorporates proven White technologies. An internal, balanced architecture and a widewalled sleeve that is 40% thicker than standard designs offer **increased performance** during transient pressure conditions.

Features

- Open Center
- Power Beyond
- Closed Center
- Load Sensing
- Integral Valves
- Q-Amp
- 2-Speed
- Dual Displacement
- Versa Steer
- Wide Angle
- Cylinder Damping

Applications

- Construction Machinery
- Agriculture Machinery
- Heavy-Duty Equipment
- Marine
- Forestry Machinery
- Mining Equipment

Specifications

Max. System Pressure	275 bar [4000 PSI]
Max. Back Pressure	21 bar [305 PSI]
Rated Flow	
- Low	7,6 - 15 l/min [2 - 4 GPM]
- Medium	15 - 30 l/min [4 - 8 GPM]
- High	30 - 61 l/min [8 - 16 GPM]
- Low (with Q-Amp)	8 - 19 l/min [2 - 5 GPM]
- Medium (with Q-Amp)	19 - 38 l/min [5 - 10 GPM]
- High (with Q-Amp)	38 - 76 l/min [10 - 20 GPM]
Max. Differential Between Steering Unit and System Temperature	28° C [50° F]
Max. System Operating Temperature	93°C [200° F]
Input Torque	1,1-2,8 Nm @ 6,9 bar back pressure
- Powered	[10-25 lb-in @ 100 PSI back pressure]
- Non-Powered	136 Nm [100 lb-ft]
Recommended Filtration	ISO 18/13 cleanliness level

Table 3 Specifications

WHITE can accept no responsibility for possible errors in catalogues, brochures, and other printed material. WHITE reserves the right to alter its products without notice. This also applies to products already on order provided that such alterations can be made without subsequent changes being necessary in specifications already agreed.

All trademarks in this material are the property of the respective companies. WHITE and the WHITE logotype are trademarks of WHITE Drive Motors & Steering LLC and WHITE Drive Motors and Steering Sp. z o.o..

All rights reserved.

Port Sizes

Work Ports (4)	Load Sense (LS) Port (1) *
3/4-16 (SAE)	7/16-20
M18x1,5 – 6H	M12 x 1,5 – 6H
G1/2 (BSP) Straight Thread	G 1/4 (BSP) Straight Thread
STC Dash 08**	STC Dash 06**

**Top or side when applicable*

***STC® Ports, Aeroquip, feature snap to connect technology*

Model Code — Ordering Information

The following 32-digit coding system has been developed to identify all of the configuration options for the Series 10 steering control units. Use this model code to specify a unit with the desired features. All 32-digits of the code must be present when ordering.

1	2	3	4	5	6	7	8	9	10	11	12	13	14	15	16	17	18	19	20	21	22	23	24	25	26	27	28	29	30	31	32
A	D	R																			A		A	A		A	A	A	1	0	A

Nos	Feature	Code	Description
1,2,3	Product Series	ADR	Series 10 Steering Control Unit
4	Unit Type	A	Standard
		B	Dual Displacement
		C	Wide Angle
		D	2-Speed
		E	2-Speed with Wide Angle
		G	Dual Displacement with Wide Angle
		V	Versa Steer, Wide Angle
5	Nominal Flow Rating	1	11 l/min [3 GPM] (Open Center)
		2	23 l/min [6 GPM] (Closed Center and LS)
		3	45 l/min [12 GPM] (OC, CC, and LS)
		4	19 l/min [5 GPM] (Q-Amp)
		5	38 l/min [10 GPM] (Q-Amp)
		6	76 l/min [20 GPM] (Q-Amp)
		7	23 l/min [6 GPM] (Open Center)
6	Inlet Pressure Rating	1	276 bar [4000 PSI]—(Load sensing and closed center)
		2	207 bar [3000 PSI]— (Open center)
7	Return Pressure Rating	A	21 bar [305 PSI] Max.— (standard rating*)
		B	10 bar [145 PSI] Max.
8-9	Displacement cm^3/r [in^3/r] — Dual Displacement Combined/Manual	01	352 [21.5] / 60 [3.6]
		02	218 [13.3] / 60 [3.6]
		03	290 [17.7] / 60 [3.6]
		04	440 [26.8] / 146 [8.9]
		05	231 [14.1] / 85 [5.2]
8-9	Displacement cm3/r [in3/r]	40	60 [3.6] — 1-8 GPM
		43	75 [4.5]
		45	95 [5.9]
		48	120 [7.3]
		50	145 [8.9]
		51	160 [9.7]
		52	185 [11.3]
		54	230 [14.1]
		57	295 [17.9]
		59	370 [22.6] — 8-16 GPM
		61	460 [28.2]
		64	590 [35.9]
		66	740 [45.1]

Nos	Feature	Code	Description
10	Flow Amplification**	A	None (No Q-Amp)
		B	1.6 : 1.0 Ratio†
		C	1.6 : 1.0 Ratio (with Manual Steering)†
		E	2.0 : 1.0 Ratio (with Manual Steering)†
		G	1.3 : 1.0 Ratio (with Manual Steering)† †Use with closed center or load sensing only.
11	Neutral Circuit	A	Open Center
		C	Closed Center
		D	Load Sensing, Static Signal
		E	Load Sensing, Dynamic Signal
		F	Open center with Power Beyond
12	Load Circuit	A	Non-Load Reaction
		B	Load Reaction (Open Center 3,8 - 30 l/min [1 - 8 GPM] Only
13,14	Special Spool/Sleeve Modification	00	None
15,16	Valve Options		

	Manual Steering Check	Load Sensing Relief	Inlet Check Valve	Cylinder Relief Valve	Anti-Cavitation Valve	Inlet Relief Valve
01	•					
02	•		•			
03	•					•
04	•		•			•
05	•				•	
06	•		•		•	
07	•			•	•	
08	•		•	•	•	
09	•		•	•	•	•
10	•	•	•	•	•	
11	•	•	•			

* 12 GPM open center requires 145psi back pressure

** All Q-amp applications need approval from an Eaton Applications Engineer

Continued on next page

WHITE can accept no responsibility for possible errors in catalogues, brochures, and other printed material. WHITE reserves the right to alter its products without notice. This also applies to products already on order provided that such alterations can be made without subsequent changes being necessary in specifications already agreed.

All trademarks in this material are the property of the respective companies. WHITE and the WHITE logotype are trademarks of WHITE Drive Motors & Steering LLC and WHITE Drive Motors and Steering Sp. z o.o..

All rights reserved.

Nos	Feature	Code	Description
17,18	Inlet or Load Sense Relief Valve — bar [PSI]	00	None
		18	124 [1800]
		19	131 [1900]
		20	138 [2000]
		21	145 [2100]
		22	152 [2200]
		23	158 [2290]
		24	165 [2390]
		25	172 [2490]
		26	179 [2600]
		27	186 [2700]
		28	193 [2800]
		29	200 [2900]
		30	207 [3000]
		31	214 [3100]
		32	220 [3190]
		33	227 [3290]
		34	234 [3390]
		35	241 [3500]
		36	248 [3600]
		37	255 [3700]
		38	262 [3800]
		39	269 [3900]
		40	276 [4000]
		99	136 [1970]
19,20	Cylinder Relief Valve — bar [PSI] ** Cylinder Relief setting recommendation is 870 PSI (60 bar) above steering inlet/load sense pressure.	00	None
		23	158 [2290]
		24	165 [2390]
		25	172 [2490]
		26	179 [2600]
		27	186 [2700]
		28	193 [2800]
		29	200 [2900]
		30	207 [3000]
		31	214 [3100]
		32	220 [3190]
		33	227 [3290]
		34	234 [3390]
		35	241 [3500]
		36	248 [3600]
		37	255 [3700]
		38	262 [3800]
		39	269 [3900]
		40	276 [4000]
		41	283 [4100]
		42	289 [4190]
		43	296 [4290]
		44	303 [4390
		45	310 [4500]
		46	317 [4600]
		47	324 [4700]
		48	331 [4800]
		49	338 [4900]

Nos	Feature	Code	Description
21,22, 23,24	Ports and Mounting Threads	AAAA	4 x 3/4-16 (SAE) Ports None (No Additional Port) 2 x M12 Mounting Threads Port Face 4 x M10 Mounting Threads Mounting Face
		AABA	4 x 3/4-16 (SAE) Ports 7/16-20 Load Sensing Port on Side 2 x M12 Mounting Threads Port Face 4 x M10 Mounting Threads Mounting Face
		AACA	4 x 3/4-16 (SAE) Ports 7/16-20 Load Sensing Port Face 2 x M12 Mounting Threads Port Face 4 x M10 Mounting Threads Mounting Face
		BAAA	4 x M18 x 1,5 - 6H Metric O-ring Ports None (No Additional Port) 2 x M12 Mounting Threads Port Face 4 x M10 Mounting Threads Mounting Face
		BADA	4 x M18 x 1,5 - 6H Metric O-ring Ports M12 x 1,5 - 6H Load Sensing Port on Side 2 x M12 Mounting Threads Port Face 4 x M10 Mounting Threads Mounting Face
		BAEA	4 x M18 x 1,5 - 6H Metric O-ring Ports M12 x 1,5 - 6H Load Sensing Port Face 2 x M12 Mounting Threads Port Face 4 x M10 Mounting Threads Mounting Face
		CAAA	4 x G 1/2 (BSP) Straight Thread Ports None (No Additional Port) 2 x M12 Mounting Threads Port Face 4 x M10 Mounting Threads Mounting Face

Continued on next page

WHITE can accept no responsibility for possible errors in catalogues, brochures, and other printed material. WHITE reserves the right to alter its products without notice. This also applies to products already on order provided that such alterations can be made without subsequent changes being necessary in specifications already agreed.

All trademarks in this material are the property of the respective companies. WHITE and the WHITE logotype are trademarks of WHITE Drive Motors & Steering LLC and WHITE Drive Motors and Steering Sp. z o.o..

All rights reserved.

Nos	Feature	Code	Description
21,22,	Ports and Mounting Threads (continued)	CAFA	4 x G 1/2 (BSP) Straight Thread Ports G 1/4 (BSP) LS Straight Thread Port on Side 2 x M12 Mounting Threads Port Face 4 x M10 Mounting Threads Mounting Face
		CAGA	4 x G 1/2 (BSP) Straight Thread Ports G 1/4 (BSP) LS Straight Thread Port on Port Face 2 x M12 Mounting Threads Port Face 4 x M10 Mounting Threads Mounting Face
		DAAA	Dash 08 STC® Ports *** None (No Additional Port) 2 x M10 Mounting Threads Port Face 4 x M10 Mounting Threads Mounting Face
		DAHA	Dash 08 STC® Ports *** Dash 06 STC® Port on Side 2 x M10 Mounting Threads Port Face 4 x M10 Mounting Threads Mounting Face
		DAJA	Dash 08 STC® Ports *** Dash 06 STC® Port Face 2 x M10 Mounting Threads Port Face 4 x M10 Mounting Threads Mounting Face
25	Mechanical Interface	A	Internal Involute Spline, 12 Tooth 16/32 DP 30° PA
26	Input Torque	3	Standard
27	Fluid Type	A	See Technical Bulletin 3-401
28,29	Special Features	AA	None
30	Paints and Packaging	1	Black Primer
31	Identification	0	Product Number on Nameplate
32	Assigned Design Code	B	Assigned Design Code

*** STC with inlet check requires threaded adapter. Contact your Account Representative for assistance.

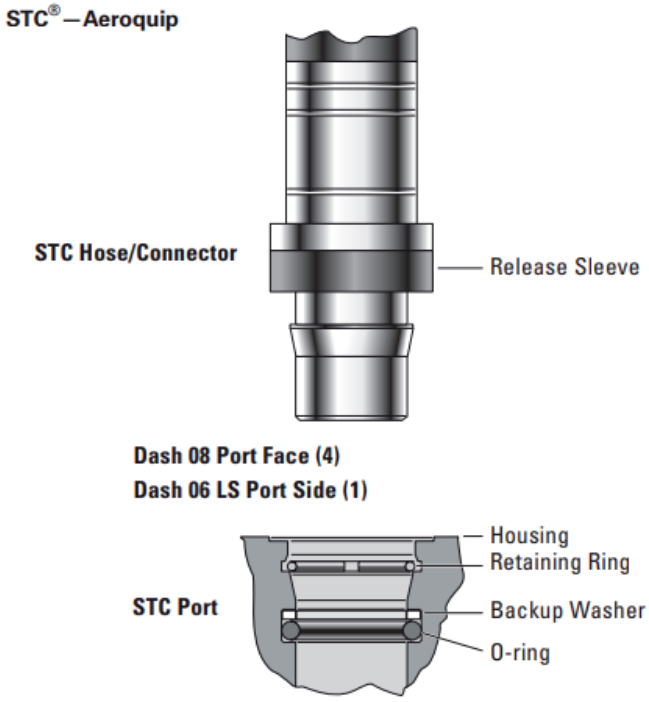

Installation Drawing

Port And Mounting Thread Combinations

Port	Column Mounting Thread	Load Sensing* Port	Port Mounting Thread
3/4-16	M10 x 1,5 -6H	7/16-20	M12 x 1,75 – 6H
M18 x 1,5 -6H		M12x1,5 – 6H	
STC		STC	
G1/2 (BSP)		G 1/4 (BSP)	

Table 4 Port and Mounting Thread Combinations

**Load Sensing Units Only.*

WHITE can accept no responsibility for possible errors in catalogues, brochures, and other printed material. WHITE reserves the right to alter its products without notice. This also applies to products already on order provided that such alterations can be made without subsequent changes being necessary in specifications already agreed.

All trademarks in this material are the property of the respective companies. WHITE and the WHITE logotype are trademarks of WHITE Drive Motors & Steering LLC and WHITE Drive Motors and Steering Sp. z o.o..

All rights reserved.

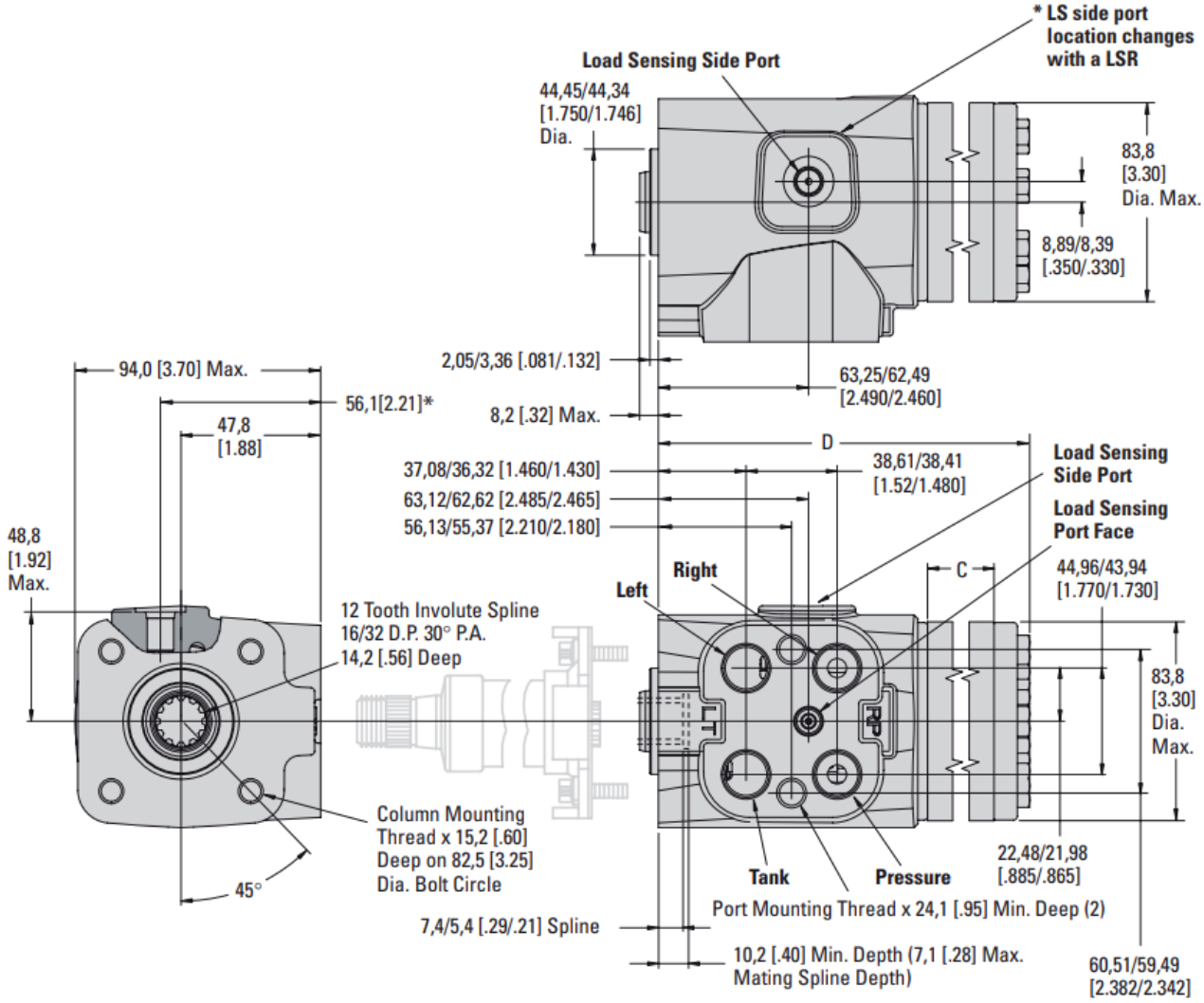

Figure 31 Installation Drawing

Displacement cm³/r [in³/r]	Dimension C mm [in.]	Dimension D mm [in.]
60 [3.6]	10,2 [.40]	138,1 [5.44]
75 [4.5]	10,2 [.40]	138,1 [5.44]
95 [5.9]	13,2 [.52]	141,1 [5.56]
120 [7.3]	16,5 [.65]	144,4 [5.69]
146 [8.9]	20,1 [.79]	148,0 [5.83]
159 [9.7]	21,8 [.86]	149,9 [5.90]
185 [11.3]	25,4 [1.00]	153,3 [6.04]
231 [14.1]	31,7 [1.25]	159,7 [6.29]
293 [17.9]	40,4 [1.59]	168,3 [6.63]
370 [22.6]	50,8 [2.00]	178,7 [7.04]
462 [28.2]	63,5 [2.50]	191,4 [7.54]
588 [35.9]	80,8 [3.18]	208,8 [8.22]
739 [45.1]	101,6 [4.00]	229,6 [9.04]

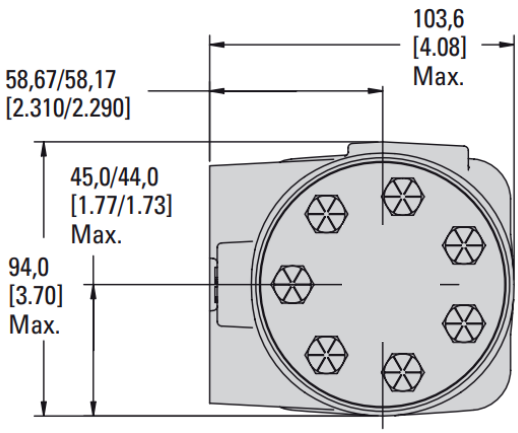

Table 5 Dimensions

WHITE can accept no responsibility for possible errors in catalogues, brochures, and other printed material. WHITE reserves the right to alter its products without notice. This also applies to products already on order provided that such alterations can be made without subsequent changes being necessary in specifications already agreed.

All trademarks in this material are the property of the respective companies. WHITE and the WHITE logotype are trademarks of WHITE Drive Motors & Steering LLC and WHITE Drive Motors and Steering Sp. z o.o..

All rights reserved.

Sectional Drawing and Integral Valves

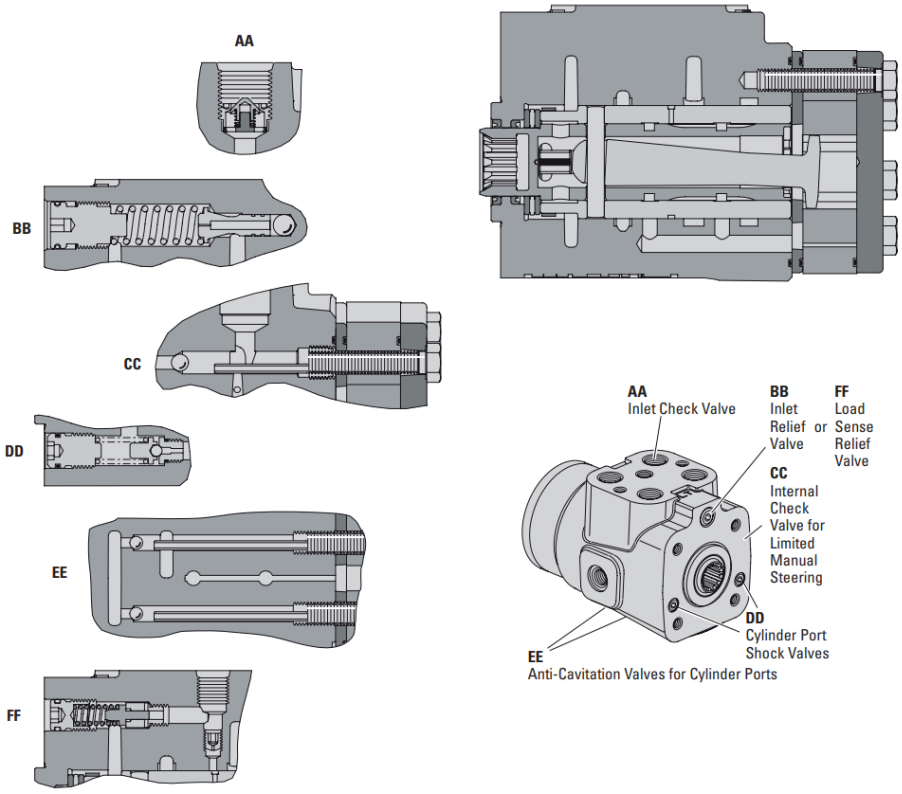

Figure 32 Sectional Drawing and Integral Valves

Performance Data

Cylinder Relief Valve

Pressure Drop versus Flow

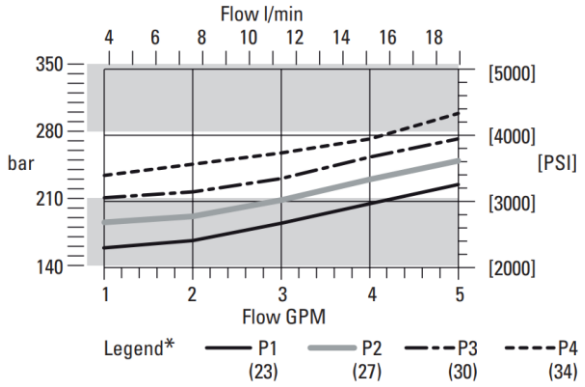

Figure 33 Cylinder Relief Valve

Inlet Relief Valve

Pressure Drop versus Flow

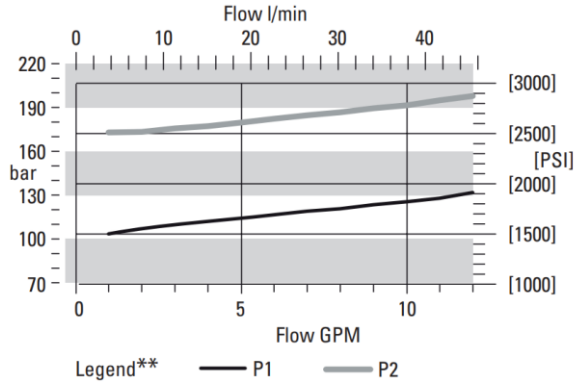

Figure 34 Inlet Relief Valve

Anti-Cavitation Valve

Pressure Drop versus Flow

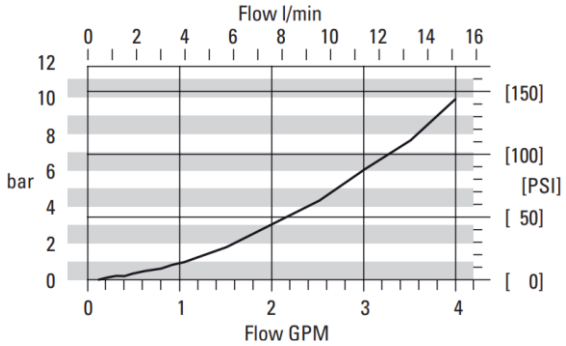

Figure 35 Anti-Cavitation Valve

Input Torque

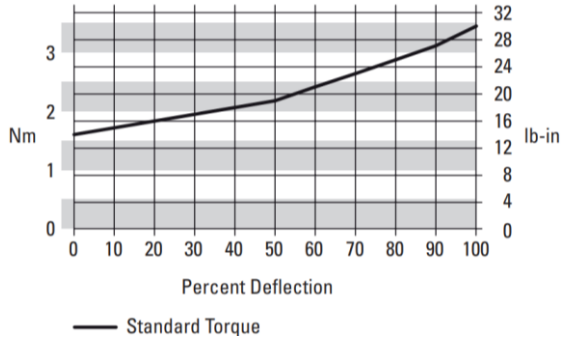

Figure 36 Input Torque

WHITE can accept no responsibility for possible errors in catalogues, brochures, and other printed material. WHITE reserves the right to alter its products without notice. This also applies to products already on order provided that such alterations can be made without subsequent changes being necessary in specifications already agreed.

All trademarks in this material are the property of the respective companies. WHITE and the WHITE logotype are trademarks of WHITE Drive Motors & Steering LLC and WHITE Drive Motors and Steering Sp. z o.o..

All rights reserved.

Steering Control Units— Series 10 Dual Displacement

Installation Drawing

Port And Mounting Thread Combinations

Port	Column Mounting Thread	Load Sensing* Port	Port Mounting Thread
3/4-16	M10 x 1,5 -6H	7/16-20	M12 x 1,75 – 6H
M18 x 1,5 -6H		M12x1,5 – 6H	
STC**		STC**	
G1/2 (BSP)		G 1/4 (BSP)	

Table 6 Port and Mounting Thread Combinations

**Load Sensing Units Only.*

*** See Installation Drawing*

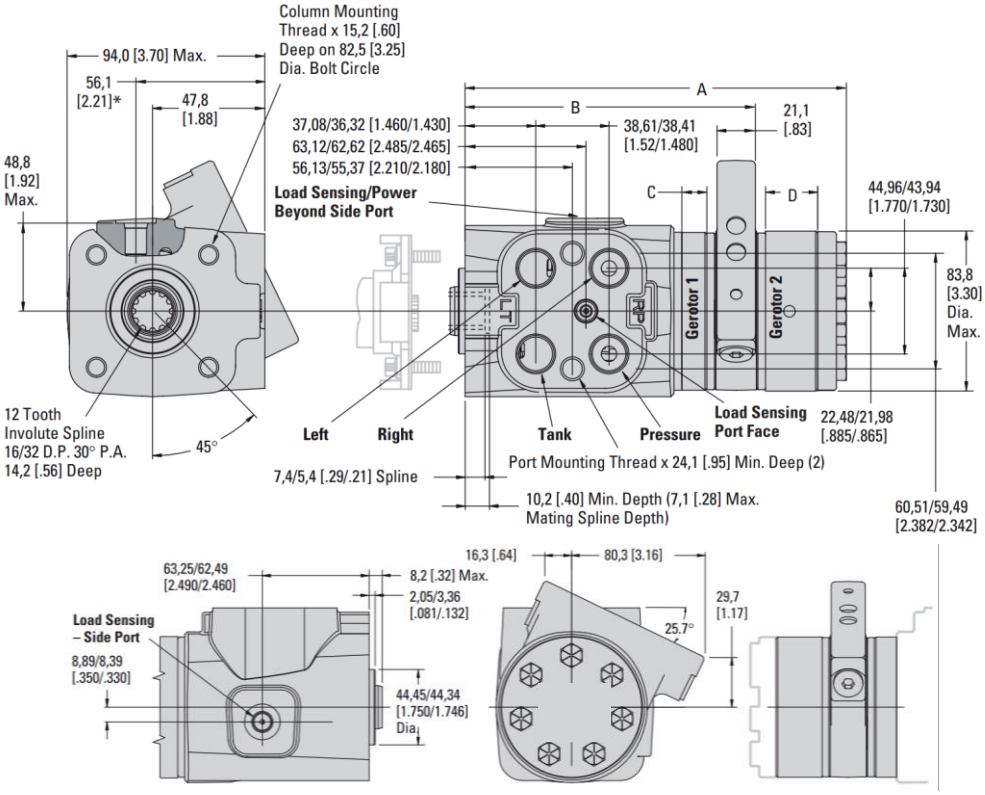

Figure 37 Series 10 Dual Displacement

Powered Displacement cm³/r [in³/r]	Dimension B mm [in.]	Dimension A mm [in.]	Manual Displacement cm³/r [in³/r]	Dimension C mm [in.]	Manual Displacement cm³/r [in³/r]	Dimension C mm [in.]
Gerotor 1 and 2			**Gerotor 1**		**Gerotor 2**	
156 [9.5]	146,5 [5.77]	182,9 [7.20]	60 [3.6]	10,2 [.40]	95 [5.9]	13,2 [.52]
179 [10.9]		186,2 [7.33]			120 [7.3]	16,5 [.65]
205 [12.5]		189,7 [7.47]			145 [8.9]	20,0 [.79]
218 [13.3]		191,5 [7.54]			160 [9.7]	21,8 [.86]
244 [14.9]		195,1 [7.68]			185 [11.3]	25,4 [1.00]

Table 7 Dimensions

WHITE can accept no responsibility for possible errors in catalogues, brochures, and other printed material. WHITE reserves the right to alter its products without notice. This also applies to products already on order provided that such alterations can be made without subsequent changes being necessary in specifications already agreed.

All trademarks in this material are the property of the respective companies. WHITE and the WHITE logotype are trademarks of WHITE Drive Motors & Steering LLC and WHITE Drive Motors and Steering Sp. z o.o..

All rights reserved.

Chapter 5
Steering Control Units—Series 20

Topics:

- *Product Description*
- *Model Code – Ordering Information*
- *Installation Drawing*
- *Installation Drawing (Load Sense Relief Option)*
- *Sectional Drawing and Integral Valves*
- *Performance Data*

WHITE can accept no responsibility for possible errors in catalogues, brochures, and other printed material. WHITE reserves the right to alter its products without notice. This also applies to products already on order provided that such alterations can be made without subsequent changes being necessary in specifications already agreed.

All trademarks in this material are the property of the respective companies. WHITE and the WHITE logotype are trademarks of WHITE Drive Motors & Steering LLC and WHITE Drive Motors and Steering Sp. z o.o..

All rights reserved.

Product Description

The Series 20 steering control unit continues White tradition of innovative design and high quality that began with the first fluid linked power steering system.

You can count on this steering unit to provide the same smooth, predictable steering as the White steering units that provide dependable, trouble-free steering on applications around the world.

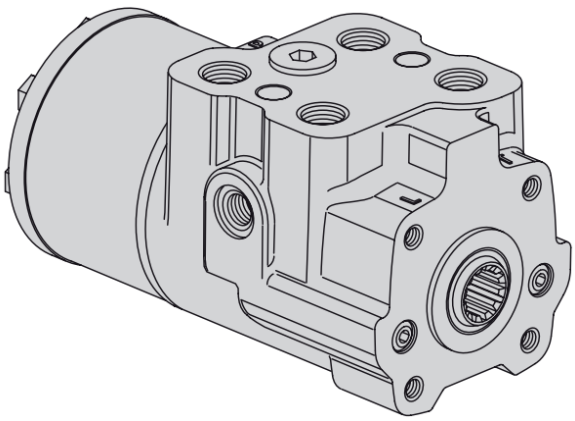

Figure 38 Series 20

- Provides much smoother steering function by minimizing jerky motion on articulated vehicles.
- Jerk-reducing valves and accumulators can be eliminated on most vehicles, providing customer savings through fewer components required and reduced system cost.
- Symmetrical valving provides passageways and valving that are equally placed, and pressure areas that are staged for minimum internal leakage. This results in balance, precise servo response and uniform left or right steering action.
- High capacity gerotor provides ample fluid displacement from an even more compact unit than was previously offered.
- A thicker sleeve design provides stability, especially during pressure and thermal transient conditions.
- The seal and centering spring designs provide positive, low-effort steering feel to ensure excellent vehicle control, an important feature for the vehicles for which these steering control units were designed.

Features

- Load Sensing
- Integral Valves
- Q-Amp
- Wide Angle
- Versa Steer
- Cylinder Damping

Applications Articulated Vehicles

- Loaders
- Scrapers
- Skidders
- AG Tractors
- Dumpers
- Sprayers
- Forestry Equipment

Rigid Frame Vehicles

- Front End Loaders
- Large Graders
- Mining Trucks
- Transporters
- AG Tractors

Specifications

Max. System Pressure	241 bar [3500 PSI]
Max. Back Pressure	10 bar [145 PSI]
Rated Flow	95 l/min [25 GPM]
Max. Flow	125 l/min [33 GPM]
Max. Differential Between Steering Unit and System Temperature	28° C [50° F]
Max. System Operating Temperature	93°C [200° F]
Input Torque - Powered - Non-Powered	1,1-2,8 Nm @ 6,9 bar back pressure [10-25 lb-in @ 100 PSI back pressure] 136 Nm [100 lb-ft]
Recommended Filtration	ISO 18/13 cleanliness level

Table 8 Specifications

WHITE can accept no responsibility for possible errors in catalogues, brochures, and other printed material. WHITE reserves the right to alter its products without notice. This also applies to products already on order provided that such alterations can be made without subsequent changes being necessary in specifications already agreed.

All trademarks in this material are the property of the respective companies. WHITE and the WHITE logotype are trademarks of WHITE Drive Motors & Steering LLC and WHITE Drive Motors and Steering Sp. z o.o..

All rights reserved.

Model Code – Ordering Information

The following 29-digit coding system has been developed to identify all of the configuration options for the Series 20 steering control units. Use this model code to specify a unit with the desired features. All 29-digits of the code must be present when ordering.

1	2	3	4	5	6	7	8	9	10	11	12	13	14	15	16	17	18	19	20	21	22	23	24	25	26	27	28	29
A	C	C		6	A				F											N		A		A	A	1	0	C

Nos	Feature	Code	Description
1,2,3	Product Series	ACC	Series 20 Steering Control Unit
4	Nominal Flow Rating	4	38 l/min [10 GPM] (Q-Amp)
		6	76 l/min [20 GPM] (Q-Amp)
		7	95 l/min [25 GPM] (Non-Q-Amp)
		A	114 l/min [30 GPM] (Q-Amp)
5	Inlet Pressure Rating	6	241 bar [3500 PSI]
6	Return Pressure Rating	A	10 bar [145 PSI] Maximum
7-8	Displacement cm3/r [in3/r]	40	60 [3.6] — Use with 38 l/min [10 GPM]
		43	75 [4.5]
		45	95 [5.9]
		48	120 [7.3]
		50	145 [8.9]
		51	160 [9.7]
		52	185 [11.3] — Use with 76 l/min [20 GPM]
		54	230 [14.1]
		57	295 [17.9]
		59	370 [22.6]
		61	460 [28.2]
		64	590 [35.9] — Use with 114 l/min [30 GPM]
		66	740 [45.1]
		69	985 [60.0]
9	Flow Amplification	0	No Q-Amp
		1	1.6 : 1.0 Ratio (Actual Displ. 185 to 985 cm3/r [11.3 to 60.0 in3/r])
		3	2.0 : 1.0 Ratio (Actual Displ. 60 to 370 cm3/r [3.6 to 22.6 in3/r])
10	Neutral Circuit	F	Load Sensing, Dynamic Signal
11	Load Circuit	A	Non-Load Reaction
		D	Non-Load Reaction, Cylinder Damped

Nos	Feature	Code	Description
12,13	Valve Options*		

	Manual** Steering Check	Load Sensing Relief	Inlet** Check Valve	Cylinder Relief Valve	Anti-Cavitation Valve
00					
01	•				
02					•
09	•			•	•
10	•		•	•	•
13	•	•	•	•	•
21				•	•
24			•	•	•
40		•	•	•	•

*Not all valve options will work with all unit combinations

**76 l/min [20 GPM] Max.

14,15	Load Sensing Relief	00	None
	Valve Setting	4N	150 bar [2180 PSI]
		50	160 bar [2320 PSI]
		5A	170 bar [2470 PSI]
		5L	180 bar [2610 PSI]
		5Y	190 bar [2760 PSI]
		68	200 bar [2900 PSI]
		6J	210 bar [3050 PSI]
		6V	220 bar [3190 PSI]
		76	230 bar [3340 PSI]
		7G	240 bar [3480 PSI]

WHITE can accept no responsibility for possible errors in catalogues, brochures, and other printed material. WHITE reserves the right to alter its products without notice. This also applies to products already on order provided that such alterations can be made without subsequent changes being necessary in specifications already agreed.

All trademarks in this material are the property of the respective companies. WHITE and the WHITE logotype are trademarks of WHITE Drive Motors & Steering LLC and WHITE Drive Motors and Steering Sp. z o.o..

All rights reserved.

Nos	Feature	Code	Description
16,17	Cylinder Relief Valve Setting	00	None
		6J	210 bar [3050 PSI]
		6V	220 bar [3190 PSI]
		76	230 bar [3340 PSI]
			7G 240 bar [3480 PSI]
			7T 250 bar [3630 PSI]
			84 260 bar [3770 PSI]
			8E 270 bar [3920 PSI]
			8R 280 bar [4060 PSI]
			92 290 bar [4210 PSI]
			9C 300 bar [4350 PSI]
**Cylinder Relief Setting recommendation is 870 PSI (60 bar) above steering inlet/load sense pressure.			
18,19, 20,21	Ports and Mounting Threads	AABN	4 x G 1/2 (BSP) Ports with G 1/4 (BSP) Load Sensing Port on Side, M10 Mounting Threads
		DACN	4 x 3/4 (SAE) Ports with 7/16 (SAE) Load Sensing Port on Side, M10 Mounting Threads
		FAFN	4 x M18 (Metric) Ports with M12 (Metric) Load Sensing Port on Side, M10 Mounting Threads
		FBFN	4 x M18 (Metric) Ports with M14 (Metric) Load Sensing Port on Side, M10 Mounting Threads
		RACN*	4 x 7/8 (SAE) Ports with 7/16 (SAE) Load Sensing Port on Side, M10 Mounting Threads
		SAFN*	4 x M22 (Metric) Ports with M12 (Metric) Load Sensing Port on Side, M10 Mounting Threads
		SBFN*	4 x M22 (Metric) Ports with M14 (Metric) Load Sensing Port on Side, M10 Mounting Threads
18,19, 20,21	Ports and Mounting Threads (Load Sensing Relief Only)	DADN	4 x 3/4 (SAE) Ports with 7/16 (SAE) Load Sensing Port on Port Face, M10 Mounting Threads
		AAWN	4 x G 1/2 (BSP) Ports with G 1/4 (BSP) Load Sensing Port on Port Face, M10 Mounting Threads
		RADN*	4 x 7/8 (SAE) Ports with 7/16 (SAE) Load Sensing Port on Port Face, M10 Mounting Threads
		FAVN	4 x M18 (Metric) Ports with M12 (Metric) Load Sensing Port on Port Face, M10 Mounting Threads
		SAVN*	4 x M22 (Metric) Ports with M12 (Metric) Load Sensing Port on Port Face, M10 Mounting Threads

*Use with 114 l/min [30 GPM]

Nos	Feature	Code	Description
22	Input Torque	1	Low
		3	Standard (Includes Stiffer Springs)
23	Fluid Type	A	
24	Special Application Options	1	Wide Angle Deflection
		V	Versa Steer, Wide Angle.
25,26	Special Features	AA	None
27	Paints and Packaging	1	Black Paint
28	Identification	0	
29	Assigned Design Code	C	Assigned Design Code

WHITE can accept no responsibility for possible errors in catalogues, brochures, and other printed material. WHITE reserves the right to alter its products without notice. This also applies to products already on order provided that such alterations can be made without subsequent changes being necessary in specifications already agreed.

All trademarks in this material are the property of the respective companies. WHITE and the WHITE logotype are trademarks of WHITE Drive Motors & Steering LLC and WHITE Drive Motors and Steering Sp. z o.o..

All rights reserved.

Installation Drawing

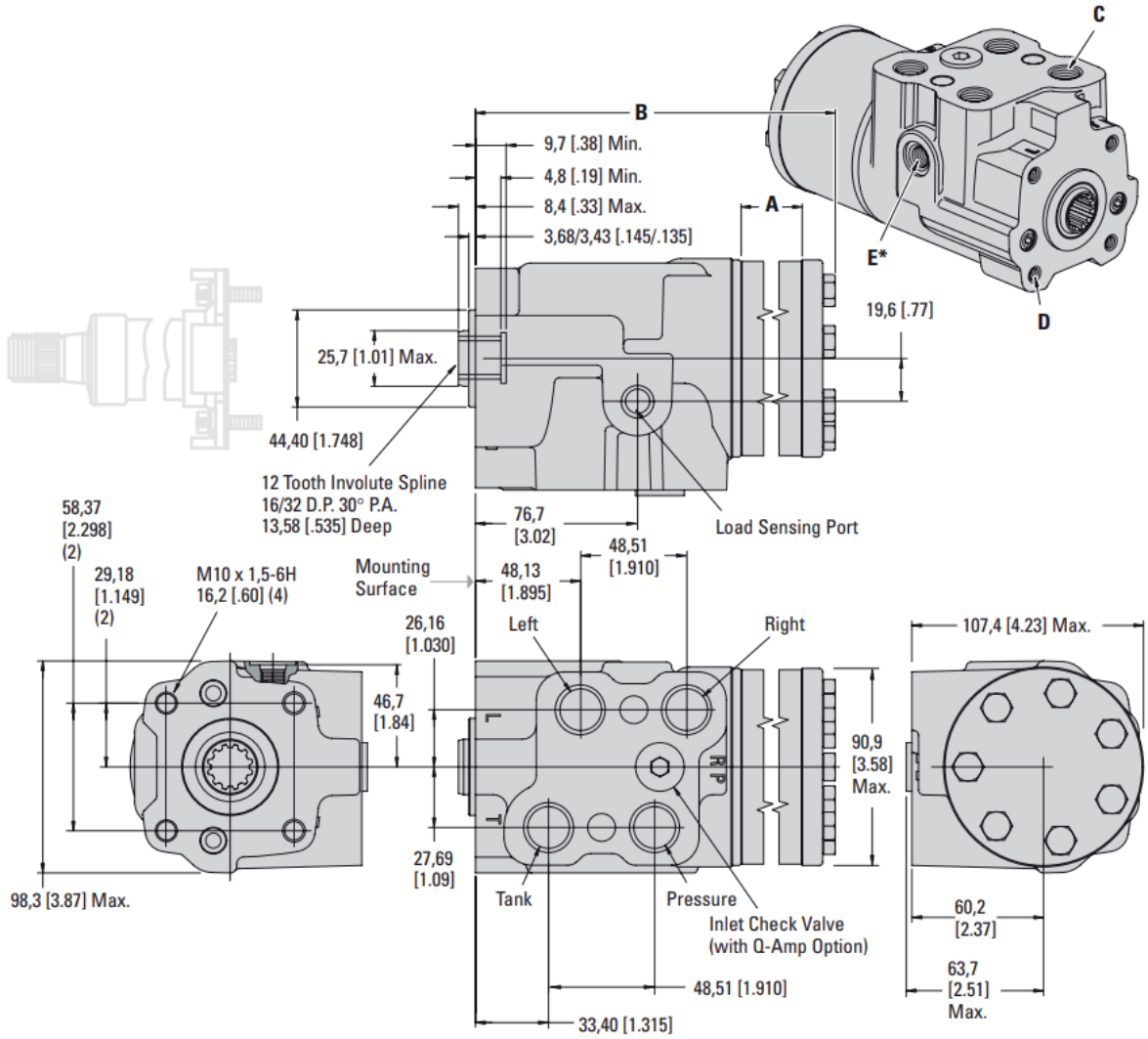

Figure 39 20 Series Installation Drawing

Displacement cm³/r [in³/r]	Dimension A mm [in.]	Dimension B mm [in.]
60 [3.6]	6,1 [.24]	143,3 [5.64]
75 [4.5]	7,9 [.31]	145,0 [5.71]
95 [5.9]	10,2 [.40]	147,3 [5.80]
120 [7.3]	12,7 [.50]	149,9 [5.90]
145 [8.9]	15,5 [.61]	152,7 [6.01]
160 [9.7]	16,8 [.66]	153,9 [6.06]
185 [11.3]	19,6 [.77]	156,7 [6.17]
230 [14.1]	24,4[.96]	161,5 [6.36]
295 [17.9]	31,0 [1.22]	168,1 [6.62]
370 [22.6]	39,1 [1.54]	176,3 [6.94]
460 [28.2]	48,8 [1.92]	185,9 [7.32]
590 [35.9]	62,2 [2.45]	199,3 [7.85]
740 [45.1]	78,2 [3.08]	215,3 [8.48]
985 [60.0]	103,9 [4.09]	241,0 [9.49]

Table 9 Dimensions

Port And Mounting Thread Combinations

C	D	E*
3/4-16 UNF 2B**	M10 x 1,5 -6H	7/16-20 UNF 2B**
G1/2 ***		G1/4 ***
M18 x 1,5 -6H		M12 x 1,5 – 6H, M14
M22 x 1,5 -6H		M12 x 1,5 – 6H, M14

Table 10 Port and Mounting Thread Combinations

**Load sensing port option—on side (load sense relief port face only).*
***SAE O-ring Port Port*
****BSP Straight Thread Port*

WHITE can accept no responsibility for possible errors in catalogues, brochures, and other printed material. WHITE reserves the right to alter its products without notice. This also applies to products already on order provided that such alterations can be made without subsequent changes being necessary in specifications already agreed.

All trademarks in this material are the property of the respective companies. WHITE and the WHITE logotype are trademarks of WHITE Drive Motors & Steering LLC and WHITE Drive Motors and Steering Sp. z o.o..

All rights reserved.

Installation Drawing (Load Sense Relief Option)

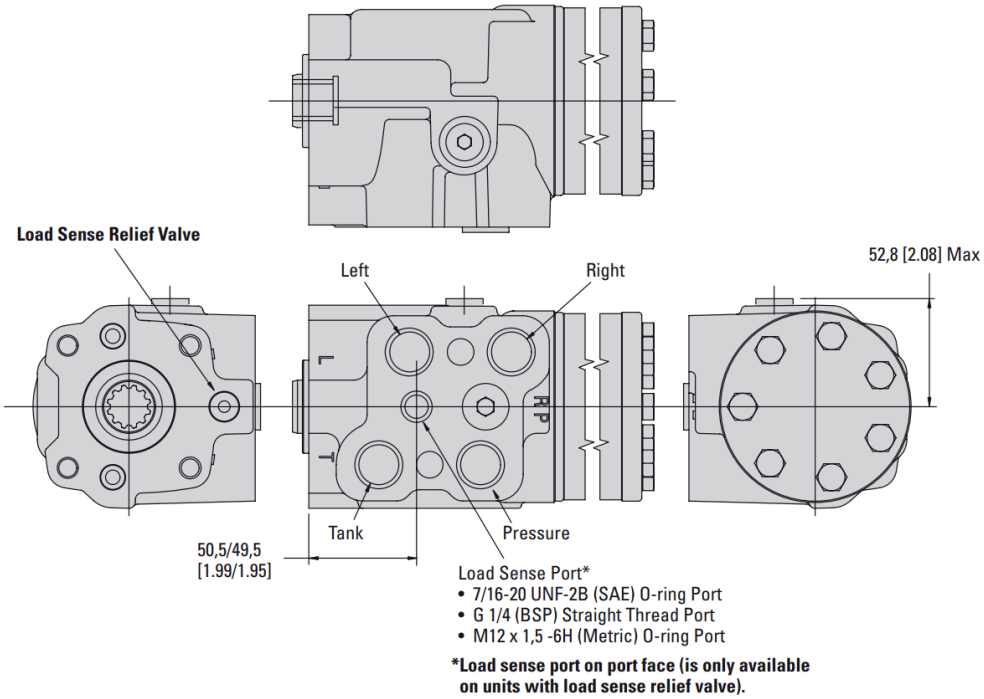

Figure 40 Installation Drawing (Load Sense Relief Option)

Sectional Drawing and Integral Valves

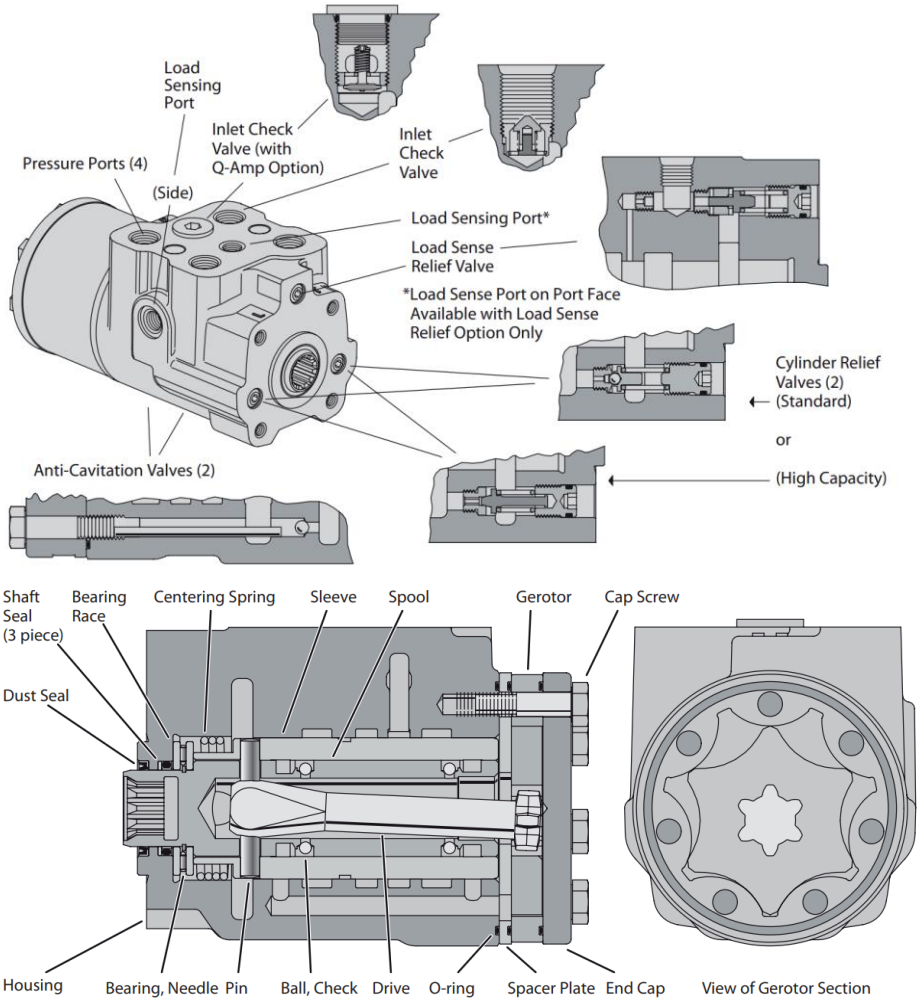

Figure 41 Sectional Drawing and Integral Valves

WHITE can accept no responsibility for possible errors in catalogues, brochures, and other printed material. WHITE reserves the right to alter its products without notice. This also applies to products already on order provided that such alterations can be made without subsequent changes being necessary in specifications already agreed.

All trademarks in this material are the property of the respective companies. WHITE and the WHITE logotype are trademarks of WHITE Drive Motors & Steering LLC and WHITE Drive Motors and Steering Sp. z o.o..

All rights reserved.

Performance Data

Cylinder Relief Valve Pressure

Drop versus Flow

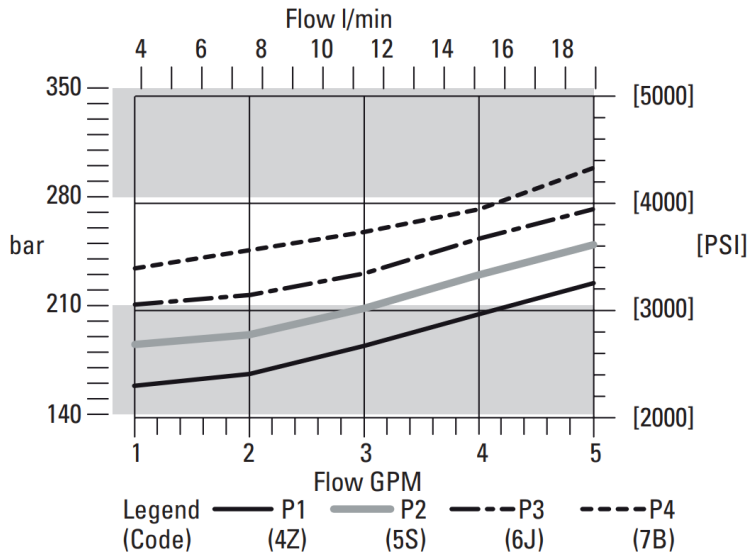

Figure 42 Cylinder Relief Valve Pressure

Input Torque

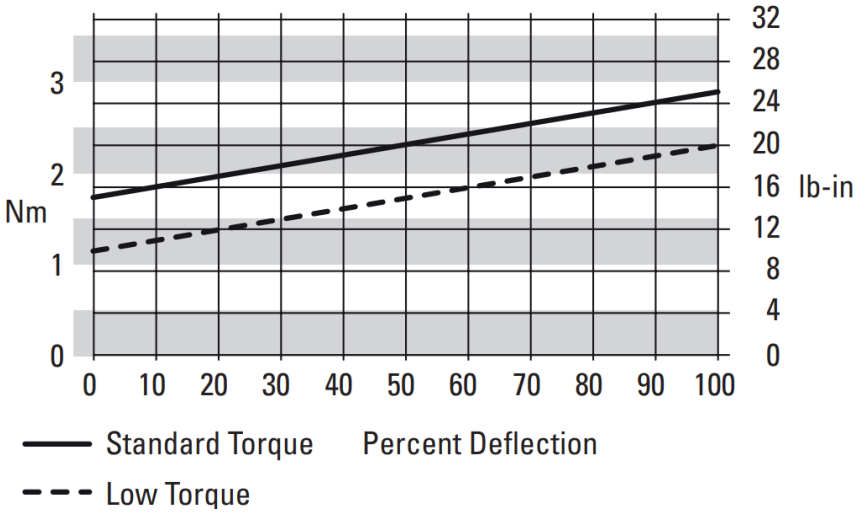

Figure 43 Input Torque

WHITE can accept no responsibility for possible errors in catalogues, brochures, and other printed material. WHITE reserves the right to alter its products without notice. This also applies to products already on order provided that such alterations can be made without subsequent changes being necessary in specifications already agreed.

All trademarks in this material are the property of the respective companies. WHITE and the WHITE logotype are trademarks of WHITE Drive Motors & Steering LLC and WHITE Drive Motors and Steering Sp. z o.o..

All rights reserved.

Figures

Figure 1 Open Center Power Beyond 6
Figure 2 Open Center Power Beyond 7
Figure 3 Valve Option A (Closed Center System) 7
Figure 4 Closed Center with Neutral Bleed 7
Figure 5 Neutral Circuits: Load Sensing 8
Figure 6 Dynamic Signal—Open Center Pump 9
Figure 7 Dynamic Signal—Load Sensing Pump 9
Figure 8 Static Signal 10
Figure 9 Closed Center System (Non-Load Reaction Circuit) 10
Figure 10 Open Center System Load Reaction Circuit 11
Figure 11 Steering Units with Integral Valves 11
Figure 12 Manual steering 13
Figure 13 Dual Displacement 14
Figure 14 Dual Displacement 15
Figure 15 Dual Displacement 15
Figure 16 Variable Ratio 17
Figure 17 Conventional Steering Control Unit 17
Figure 18 Q-Amp Steering Control Unit – Fast Turn 17
Figure 19 Q-Amp Steering Control Unit – Slow Turn 17
Figure 20 Wide angle 18
Figure 21 Standard Steering on a 25 Ton Loader 18
Figure 22 Wide Angle Steering on a 25 Ton Loader 18
Figure 23 Flow Amplification without Cylinder Damping 19
Figure 24 Flow Amplification with Cylinder Damping 19
Figure 25 Series 10 VersaSteer 20
Figure 26 Series 20 VersaSteer 20
Figure 27 Traditional Metered Steering 20
Figure 28 Series 10 Quick Steering 20
Figure 29 STC Direct Porting 21
Figure 30 Series 10 23
Figure 31 Installation Drawing 27
Figure 32 Sectional Drawing and Integral Valves 28
Figure 33 Cylinder Relief Valve 28
Figure 34 Inlet Relief Valve 28
Figure 35 Anti-Cavitation Valve 28
Figure 36 Input Torque 28
Figure 37 Series 10 Dual Displacement 29
Figure 38 Series 20 31
Figure 39 20 Series Installation Drawing 34
Figure 40 Installation Drawing (Load Sense Relief Option) 35
Figure 41 Sectional Drawing and Integral Valves 35
Figure 42 Cylinder Relief Valve Pressure 36
Figure 43 Input Torque 36

WHITE can accept no responsibility for possible errors in catalogues, brochures, and other printed material. WHITE reserves the right to alter its products without notice. This also applies to products already on order provided that such alterations can be made without subsequent changes being necessary in specifications already agreed.

All trademarks in this material are the property of the respective companies. WHITE and the WHITE logotype are trademarks of WHITE Drive Motors & Steering LLC and WHITE Drive Motors and Steering Sp. z o.o..

All rights reserved.

Tables

Table 1 Series 10 & Series 20 6
Table 2 Displacement Chart 15
Table 3 Specifications 23
Table 4 Port and Mounting Thread Combinations 26
Table 5 Dimensions 27
Table 6 Port and Mounting Thread Combinations 29
Table 7 Dimensions 29
Table 8 Specifications 31
Table 9 Dimensions 34
Table 10 Port and Mounting Thread Combinations 34

WHITE can accept no responsibility for possible errors in catalogues, brochures, and other printed material. WHITE reserves the right to alter its products without notice. This also applies to products already on order provided that such alterations can be made without subsequent changes being necessary in specifications already agreed.

All trademarks in this material are the property of the respective companies. WHITE and the WHITE logotype are trademarks of WHITE Drive Motors & Steering LLC and WHITE Drive Motors and Steering Sp. z o.o..

All rights reserved.

White Drive Motors & Steering, LLC
110 Bill Bryan Blvd, Hopkinsville, Kentucky, 42240

White Drive Motors and Steering sp. z o.o.
ul. Logistyczna 1, Bielany Wrocławskie, 55-040 Kobierzyce

whitedriveproducts.com