MOLA™

CRUSHING, SHREDDING, AND SCREENING EQUIPMENT
FOR WASTE MANAGEMENT, RECYCLING, AND CONSTRUCTION

# SECONDARY RDF SHREDDERS

# SECONDARY RDF SHREDDERS



## Secondary RDF shredders METEOR

**METEOR 1800, 2000, and 2800** are single-shaft shredders designed for the secondary size reduction of pre-shredded materials. They are suitable for producing refuse-derived fuel (RDF) and processing plastics and waste wood. The three models differ in drive power, dimensions, and output particle size.



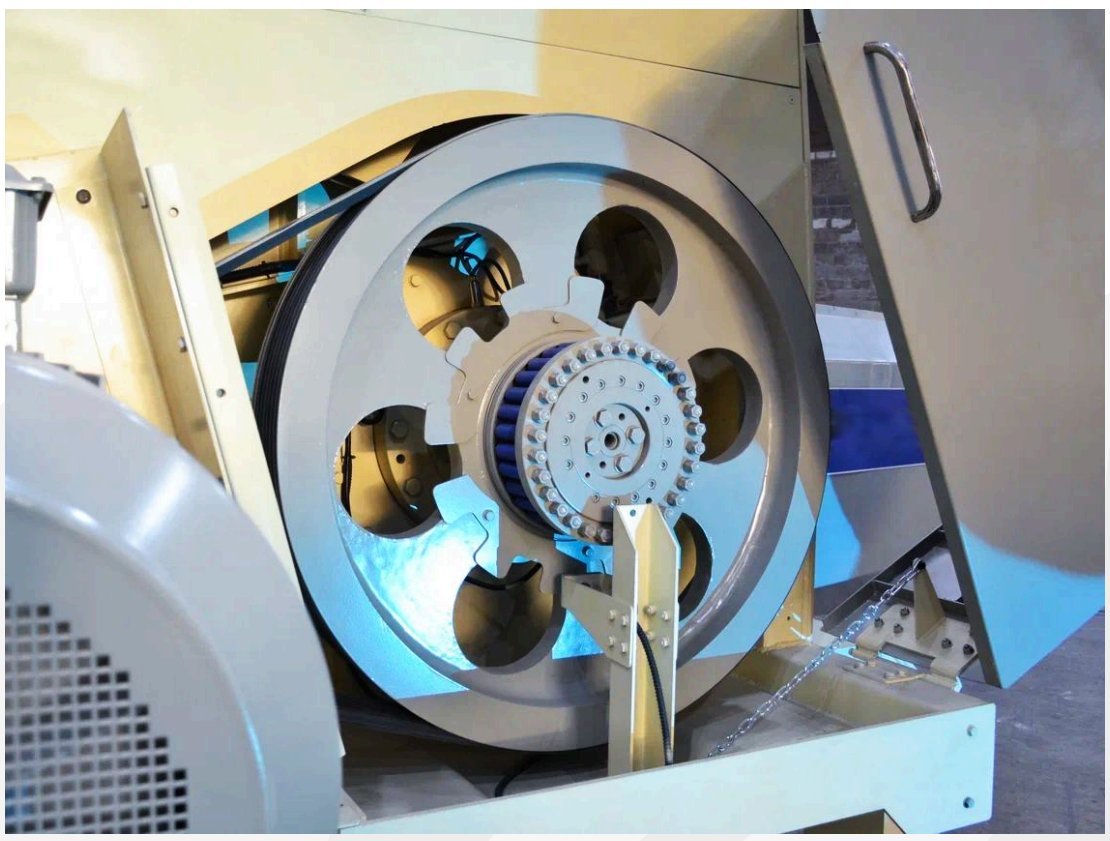

# SECONDARY RDF SHREDDERS

## RDF - General specifications

| Parameters/Models | 1800 | 2000 | 2800 |
|---|---|---|---|
| Dimensions, m (L × W × H) | 4.9 × 2.9 × 3.1 | 5.7 × 2.9 × 3.1 | 6.4 × 2.9 × 3.1 |
| Feed opening, m (L × W) | 2.03 × 1.79 | 2.13 × 2.03 | 2.85 × 2.03 |
| Volume of cutting area, $m^3$ | 3.3 | 4.0 | 5.3 |
| Total weight, t | 18.5 | 22.5 | 26.0 |
| Length of working (cutting) rotor, m | 1.77 | 2.11 | 2.80 |
| Rotor rotations per minute | 355 | 355 | 367 |
| Number of blades on a rotor, pcs. | 50 | 60 | 80 |
| Number of blades on a counter beam, pcs. | 10 | 12 | 16 |
| Number of blades on a scraper, pcs. | 10 | 12 | 16 |
| Number of sieve cassettes (hexagonal/round holes), pcs. | 5 | 6 | 8 |
| Input material size, mm (depending on material characteristics and screen configuration) | < 400 | < 400 | < 400 |
| Output particle size, mm (depending on material characteristics and screen configuration) | 10–100 | 10–100 | 10–100 |
| Number and capacity of motors, kW | 1 × 200 | 2 × 132 | 2 × 160 |

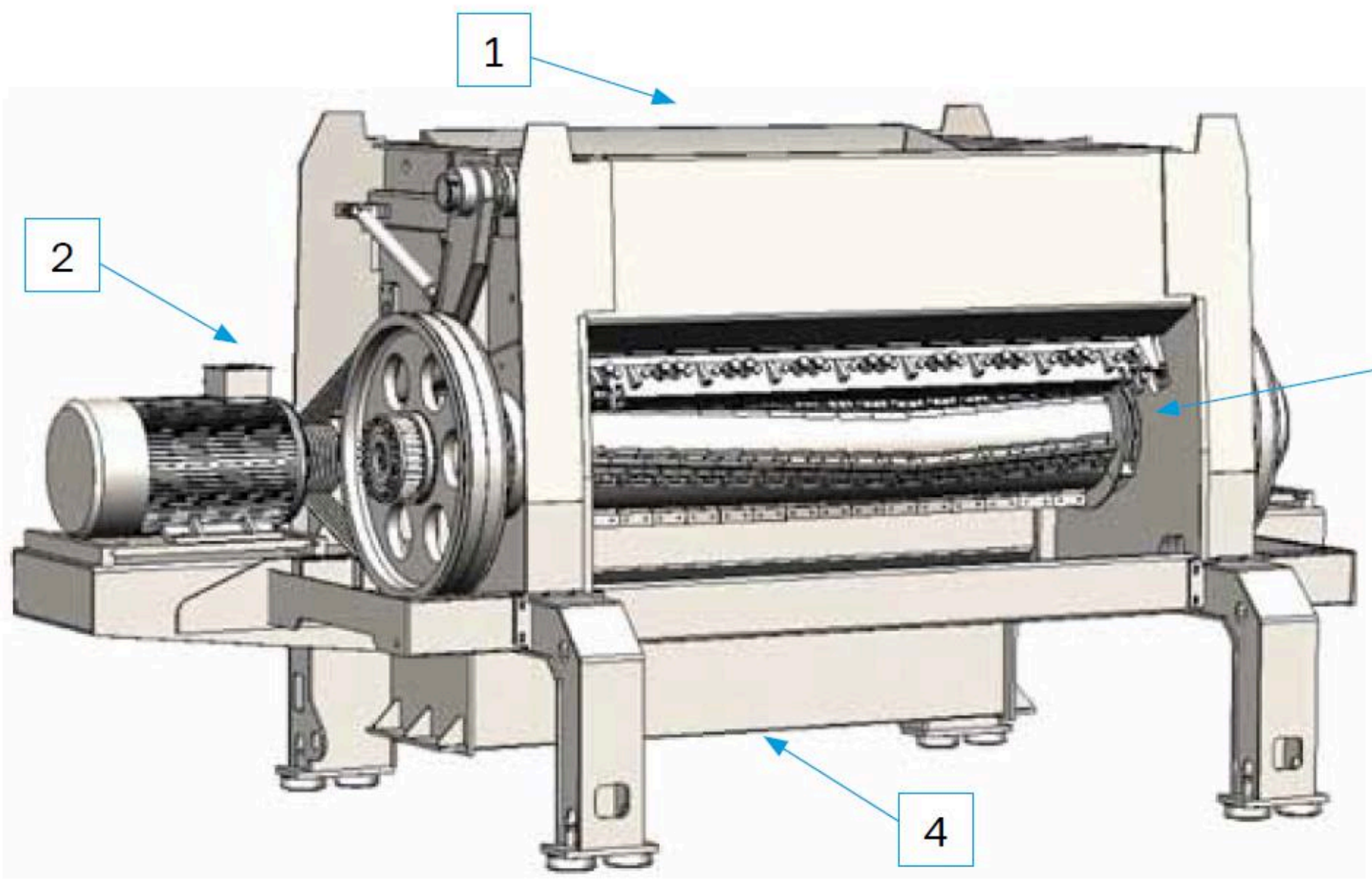


1. Loading area (loading device)
2. Drive unit (single-reduction belt gear) with a safety coupling
3. Cutting area with a rotor
4. Unloading area (unloading device)