MOLA™

CRUSHING, SHREDDING, AND SCREENING EQUIPMENT
FOR WASTE MANAGEMENT, RECYCLING, AND CONSTRUCTION

## MOBILE PRIMARY SHREDDERS

# RAPTOR 800

# MOBILE PRIMARY SHREDDERS




Mobile shredder **RAPTOR 800**

**Throughput:** up to 120 t/h.

| | |
|---|---|
| Construction waste, granular asphalt, brickwork | 80–120 t/h |
| Reinforced concrete | 70–100 t/h |
| Wood waste, roots | 20–40 t/h |
| Municipal solid waste (MSW) | 15–20 t/h |

**RAPTOR 800** features two asynchronous shafts made from high-strength materials, enabling it to process a wide range of waste materials with minimal wear. Its low requirements for feed preparation make it suitable for use in a wide range of conditions with minimal labor input. The shredder's compact dimensions allow transport on a standard three-axle hook-lift truck, or on a low-bed trailer when fitted with crawler tracks.

**Output fraction:** reinforced concrete 0–80 mm, other materials 0–250 mm (depends on material characteristics and the installed screening or sizing screen).

| | |
|---|---|
| Diesel engine | 220 kW / 299 hp |
| Output fraction size | 0–80 mm*/0–250 mm** |
| Stationary feed hopper size, mm (L × W) | 3246 × 2105 |
| Operating dimensions, mm (L × W × H) (multilift) | 10680 × 2185 × 3600 |
| Transport dimensions, mm (L × W × H) (multilift) | 6888 × 2185 × 2600 |

* Depends on the type of loaded material
** Depending on the shaft type (for bulk waste, for reinforced concrete and wood waste)

mola-ecoteh.cn

sales@mola-ecoteh.cn

MOLA

# RAPTOR 800

## Mobile shredder - General specifications

| Parameters | RAPTOR 800 | Parameters | RAPTOR 800 |
|---|---|---|---|
| **Loading unit** | | **Control system** | |
| Feed hopper type | stationary | Intuitive touch-display control system | available |
| Dimensions (length × width) | 3246 × 2105 mm | 8 customizable shredding programs | available |
| Side wall thickness | 16 mm | Light and audible alarms | available |
| **Cutting unit** | | Service Control System | available |
| Shaft size (length × diameter) | 1484 × 690 mm | Engine temperature monitoring | available |
| Two-shaft asynchronous system | 1. C&D waste<br>2. Reinforced concrete<br>3. Wood | Fuel level control | available |
| Shaft material | structural steel | Oil pressure control | available |
| Torque for each shaft | 75 000 Nm | Oil temperature control | available |
| Rotation speed | 5–30 rpm | Oil level control | available |
| Number of blades on each shaft | C&D - 24, concrete - 16, wood - 27 | Hydraulic overload protection | available |
| Blade material | Hardox 500/42CrMo | Independent system for shaft management | available |
| Protection | | Schneider Electric controller | available |
| **Engine** | | Protection class of electrical equipment | IP65 |
| Trade mark | Yuchai | Two-step protection of the electrical circuit and controller | available |
| Environmental class | Euro 3 | Integrated IoT telematics for operating data monitoring | available |
| Power | 220 kW / 299 hp | Electrical wiring in oil-resistant flexible metal conduits | available |
| Fuel tank capacity / average fuel consumption | 200 L / 12 L/h | | |
| **Hydraulic system** | | **Wireless remote control panel** | available |
| Type | closed with independent circuits | | |
| Capacity | 200 L | **Magnetic separator** | available |
| Pumps/motors | Bosch Rexroth | | |
| **Conveyor system** | | **Crawler tracks** | optional |
| Crushing and discharging | | Track type | Metal |
| multilayer chevron rubber, oil and gasoline resistant, width | 800 mm | Track gauge | 2,000 mm |
| discharge height (on hydraulic cylinders) | 2890 mm | Speed | up to 1 km/h |
| Belt movement sensor | available | | |
| Automatic reverse function | available | **General technical characteristics** | |
| Rebar damage protection | available | Weight | 16 500 kg |
| Belt control | available | | |
| **Cooling and ventilation system** | | **Mounted compact screen** | optional |
| Engine and hydraulic system radiators | combined radiator assembly with wide fin spacing and straight fins | Fraction | 2 |
| Cooling fan | automatic reversing | | |
| Filter dust sensor | with info display on the operator panel | | |
| Cyclone filter | available | | |
| Industrial coarse filters | available | | |
| Industrial fine filters | available | | |

MOLA

# RAPTOR 800

## Mobile shredder - tracked version dimensions

### Operating position

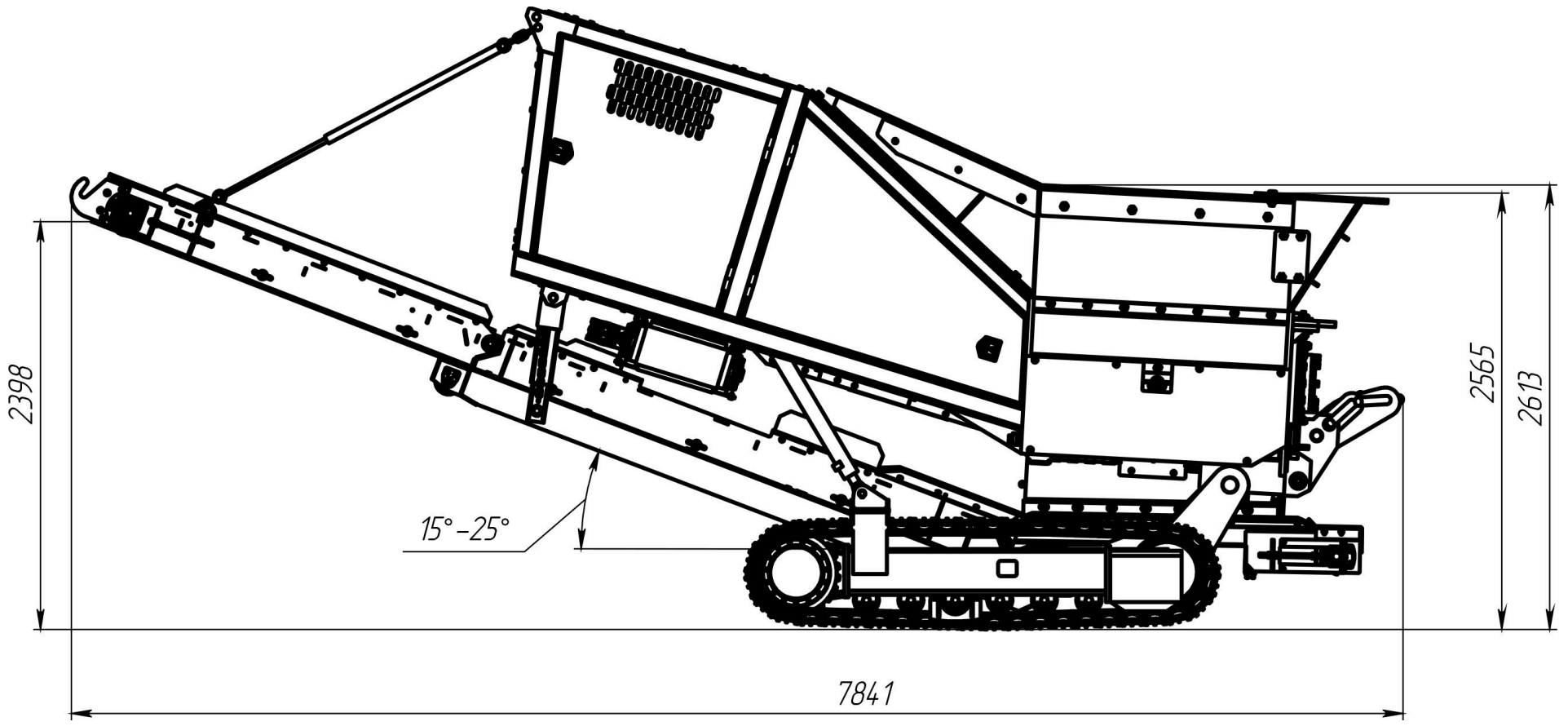


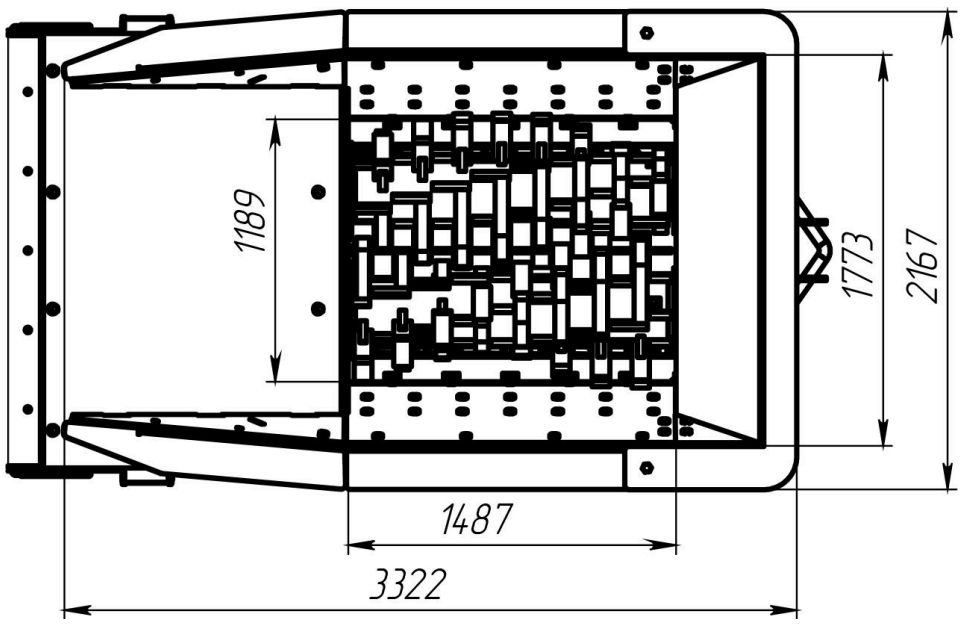


### Transport position

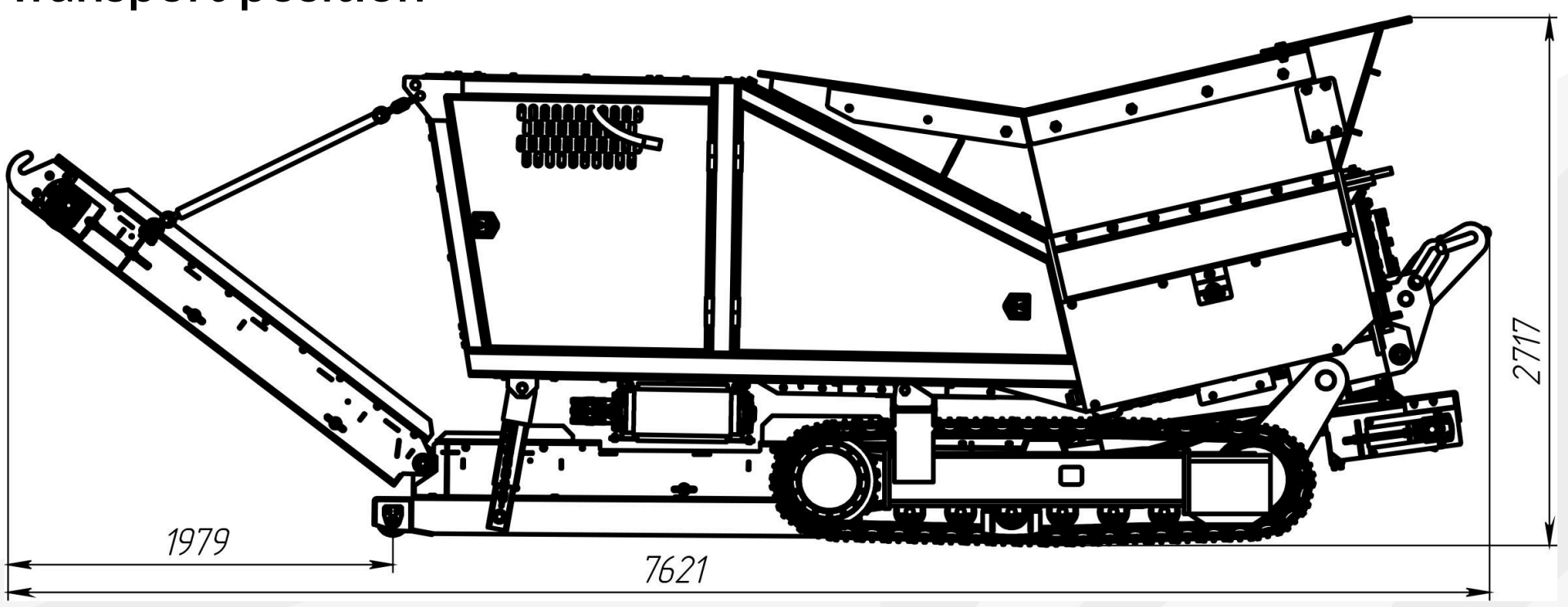


mola-ecoteh.cn

sales@mola-ecoteh.cn