MOLA™

CRUSHING, SHREDDING, AND SCREENING EQUIPMENT
FOR WASTE MANAGEMENT, RECYCLING, AND CONSTRUCTION

MOBILE PRIMARY SHREDDERS

UNIVERSAL 950

MOBILE PRIMARY SHREDDERS



Mobile shredder **UNIVERSAL 950**

Throughput: up to 300 t/h.

Construction waste, granular asphalt, brickwork	100–300 t/h
Reinforced concrete	100–200 t/h
Wood waste, roots	20–80 t/h
Municipal solid waste (MSW)	15–40 t/h

UNIVERSAL 950 is equipped with two asynchronous shafts made of high-strength materials, allowing it to process a wide range of waste materials with minimal wear. MOLA shredders can be supplied with climate-specific adaptations according to operating conditions and selected configuration. The shredder's compact dimensions make it easy to transport on a standard three-axle hook-lift truck, or on a low-bed trailer when fitted with crawler tracks.

Output fraction: 0–150 mm.





mola-ecoteh.cn

sales@mola-ecoteh.cn

MOLA

UNIVERSAL 950

Mobile shredder - General specifications

Parameters		Parameters	
Loading unit		**Control system**	
Feed hopper type	hydraulically operated tipping hopper	Intuitive touch-display control system	available
Dimensions (length × width)	5052 × 2400 mm	8 customizable shredding programs	available
Sides thickness	16 mm	Service Control System	available
Cutting unit		Engine temperature monitoring	available
Shaft size (length × diameter)	2343 × 660 mm	Fuel level control	available
Type	two-shaft asynchronous system	Oil pressure control	available
Quick-change shaft system	available	Oil temperature control	available
Blade material	Hardox 500 or equivalent	Oil level control	available
Torque for each shaft	140 000 Nm	Hydraulic overload protection	available
Rotation speed	5–30 rpm	Independent system for shaft management	available
Number of blades on each shaft	36	Light and audible alarms	available
Automatic reverse	available	Schneider Electric controller	available
Engine		Protection class of electrical equipment	IP65
Trade mark	Yuchai	Two-step protection of the electrical circuit and controller	available
Environmental class	Euro 3	Integrated IoT telematics for monitoring the operating data	available
Power	412 kW / 559 hp	Electrical wiring in oil-resistant flexible metal conduits	available
Fuel tank capacity / average fuel consumption	400 L / 16 L/h	**Wireless remote control panel**	available
Hydraulic system		**Climate package: Sub-zero / Hot Climate***	package-dependent*
Type	closed with independent circuits	Fuel heating / High-temperature adaptation	package-dependent
Capacity	400 L	Hydraulic system heating / High-temperature adaptation	package-dependent
Pumps/motors	Bosch Rexroth	Engine heating / High-temperature adaptation	package-dependent
Conveyor system		Electrical cabinet heating / High-temperature adaptation	package-dependent
Single conveyor system	available	Operating temperature	-35°C to + 40°C
multilayer chevron rubber, oil and gasoline resistant, width	1200 mm	**Magnetic separator (optional)**	
Discharge height (on hydraulic cylinders)	1135 – 3537 mm	Extraction zone depth	up to 250 mm
Belt movement sensor	available	Weight of extracted items	up to 30 kg
Automatic reverse function	available	Weight	1250 kg
Rebar damage protection	available	**Crawler tracks (optional)**	
Cooling and ventilation system		Track type	Metal
Internal combustion engine's and hydraulic systems radiator	radiator core with wide fin spacing and straight fins	Track gauge	1850 mm
		Ground clearance	346 mm
Fans	with automatic reverse mode	Speed	up to 1 km/h
Filter dust sensor	available	Weight	5700 kg
Industrial coarse filters	available	**General technical specifications**	
Industrial fine filters	available	Weight of the base model multilift	19 500 kg

*Hot Climate configuration and specific high-temperature adaptations depend on operating conditions and are subject to technical confirmation.

MOLA

UNIVERSAL 950

Mobile shredder - MULTILIFT version dimensions

Operating position

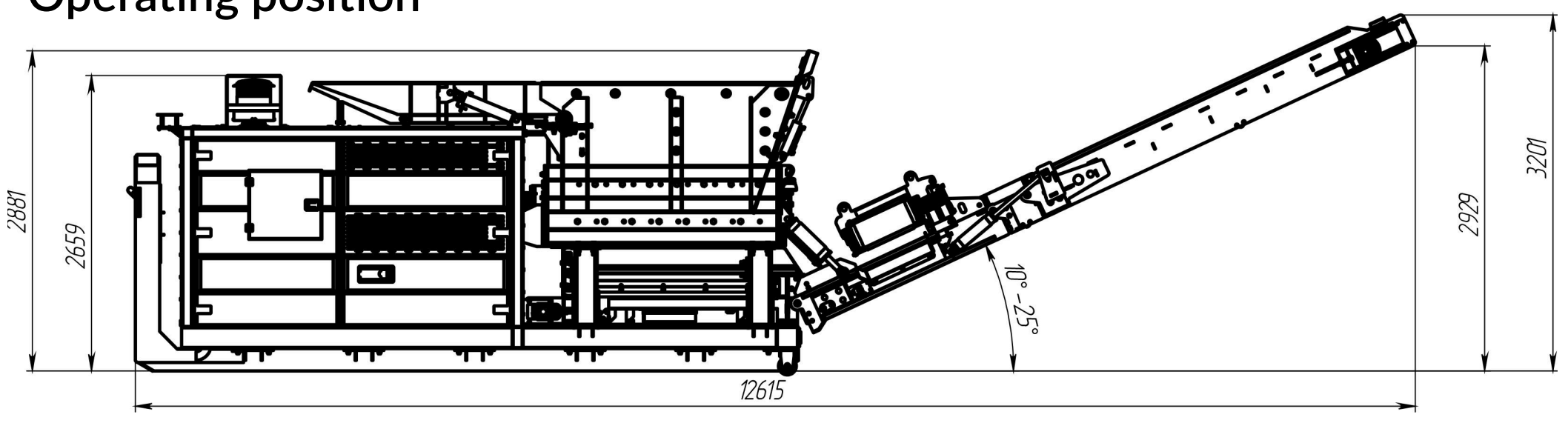

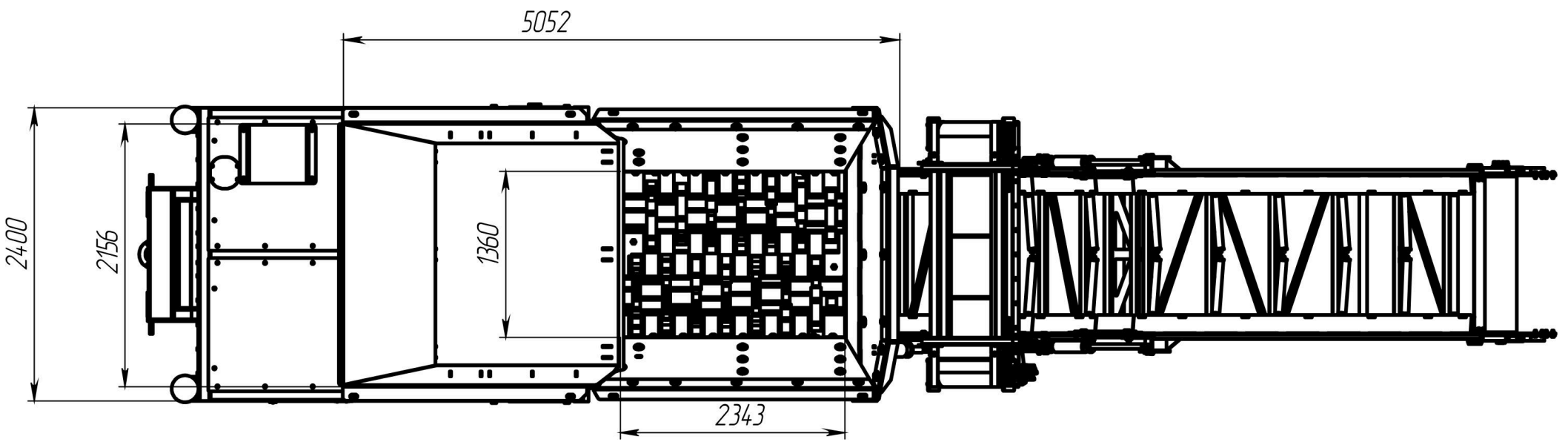

Transport position

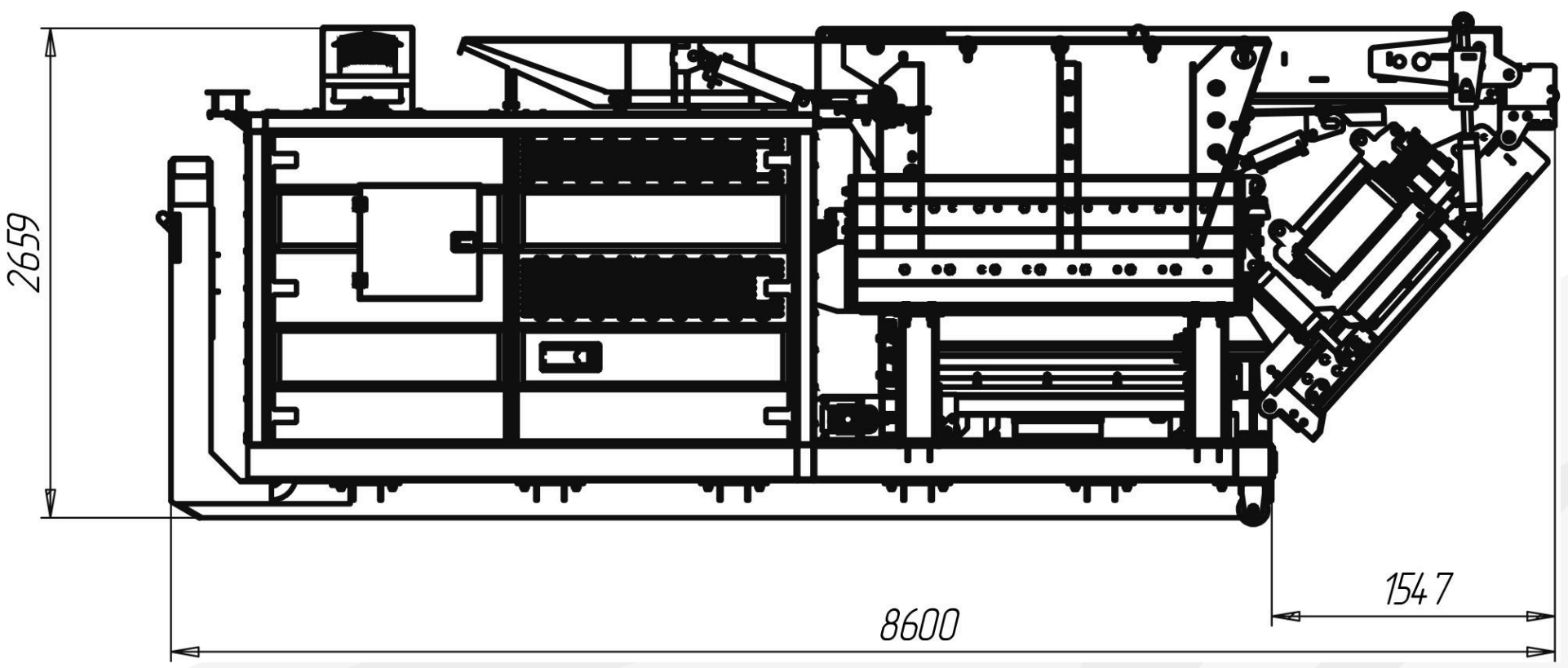

MOLA

UNIVERSAL 950

Mobile shredder - tracked version dimensions

Operating position

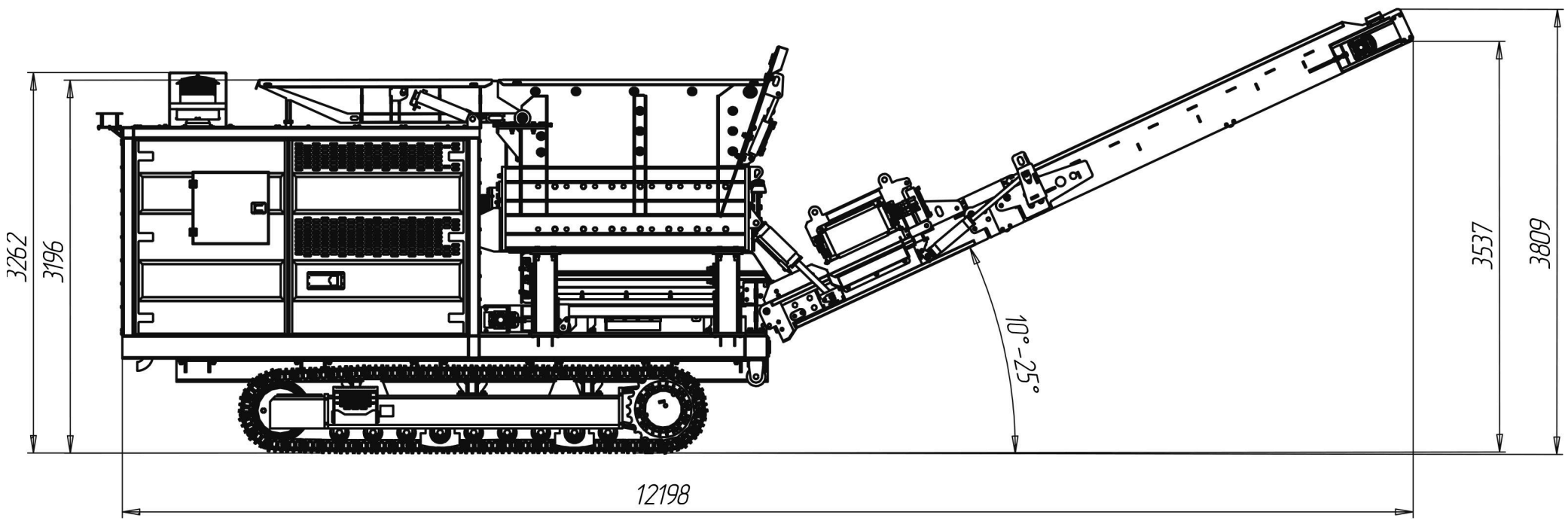

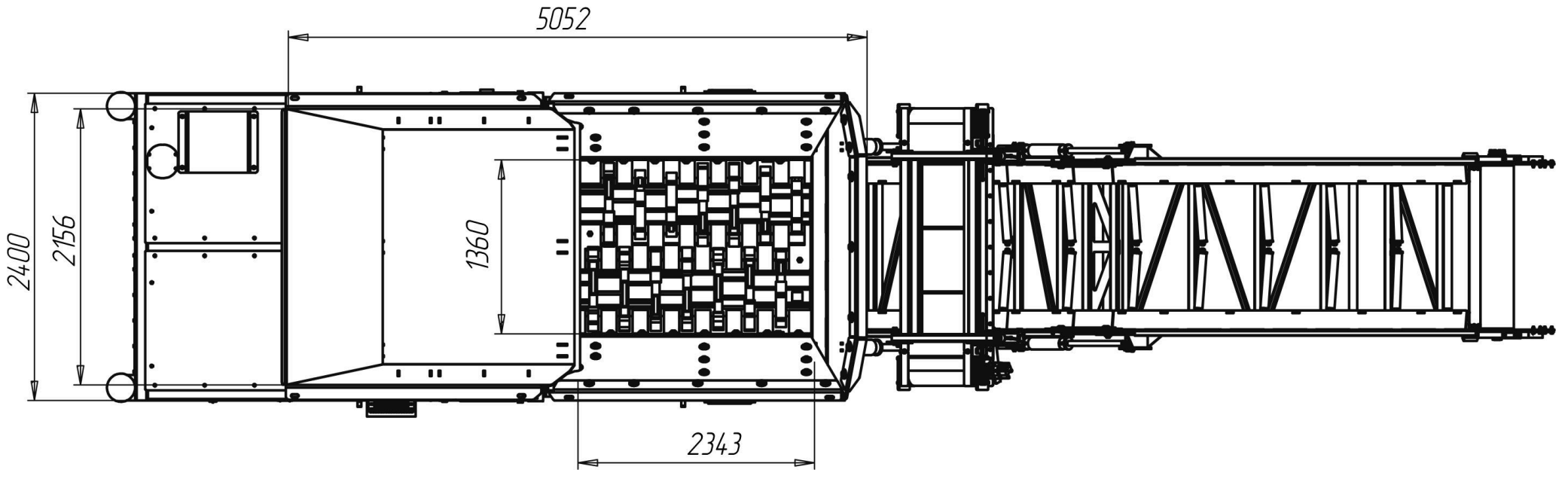

Transport position

