MOLA™

CRUSHING, SHREDDING, AND SCREENING EQUIPMENT
FOR WASTE MANAGEMENT, RECYCLING, AND CONSTRUCTION

MOBILE PRIMARY SHREDDERS

UNIVERSAL 900

MOBILE PRIMARY SHREDDERS



Mobile shredder **UNIVERSAL 900**

Throughput: up to 200 t/h.

Construction waste, granular asphalt, brickwork	80–200 t/h
Reinforced concrete	70–150 t/h
Wood waste, roots	20–60 t/h
Municipal solid waste (MSW)	15–25 t/h
Output fraction	0–150 mm (depending on material characteristics)

UNIVERSAL 900 features two asynchronous shafts made from high-strength materials, enabling it to process a wide range of waste materials with minimal wear. Its low requirements for feed preparation make it suitable for use in a wide range of conditions with minimal labor input. The shredder's compact dimensions allow it to be transported on a standard three-axle hook-lift truck or on a low-bed trailer when fitted with crawler tracks.





mola-ecoteh.cn

sales@mola-ecoteh.cn

MOLA

UNIVERSAL 900

Mobile shredder - General specifications

Parameters		Parameters	
Loading unit		**Control system**	
Feed hopper type	hydraulically operated tipping hopper	Intuitive touch-display control system	available
Dimensions (length × width)	4562 × 2400 mm	8 customizable shredding programs	available
Execution	sides thickness 16 mm	Light and audible alarms	available
Cutting unit		Service Control System	available
Shaft size (length × diameter)	1853 × 660 mm	Engine temperature monitoring	available
Type	two-shaft asynchronous system	Fuel level control	available
Quick-change shaft system	available	Oil pressure control	available
Torque for each shaft	90 000 Nm	Oil temperature control	available
Rotation speed	5–30 rpm	Oil level control	available
Number of knives per shaft	28 pcs	Hydraulic overload protection	available
Knife material	wear-resistant steel	Independent system for shaft management	available
Automatic reverse	available	Schneider Electric controller	available
Engine		Protection class of electrical equipment	IP65
Trade mark	Yuchai	Two-step protection of the electrical circuit and controller	available
Environmental class	Euro 3	Integrated IoT telematics for monitoring the operating data	available
Power	295 kW / 400 hp	Electrical wiring in oil-resistant flexible metal conduits	available
Fuel tank capacity / average fuel consumption	400 L / 16 L/h	**Wireless remote control panel**	available
Hydraulic system		**Climate package: Sub-zero / Hot Climate***	package-dependent*
Type	closed with independent circuits	Fuel heating / High-temperature adaptation	package-dependent
Capacity	400 L	Hydraulic system heating / High-temperature adaptation	package-dependent
Pumps/motors	Bosch Rexroth	Engine heating / High-temperature adaptation	package-dependent
Conveyor system		Electrical cabinet heating / High-temperature adaptation	package-dependent
Crushing and discharging		Operating temperature	-35°C to + 40°C
Multilayer chevron rubber, oil and gasoline resistant, width	1200 mm	**Magnetic separator (optional)**	
Discharge height (on hydraulic cylinders)	1135–3537 mm	Extraction zone depth	up to 250 mm
Belt movement sensor	available	Weight of extracted items	up to 20 kg
Automatic reverse function	available	Lifting and lowering system on hydraulic cylinders	
Rebar damage protection	available	Weight	1250 kg
Belt control	available		
Cooling and ventilation system		**Crawler tracks (optional)**	
Internal combustion engine's and hydraulic system's radiator	radiator core with wide fin spacing and straight fins	Track type	Metal
		Track gauge	1850 mm
Fans	with automatic reverse mode	Ground clearance	295 mm
Filter dust sensor	with info display on the operator panel	Speed	up to 4.9 km/h
Cyclone filter	available	Weight	5700 kg
Industrial coarse filters	available	**General technical characteristics**	
Industrial fine filters	available	Weight of the base model of the multilift	17 500 kg

*Hot Climate configuration and specific high-temperature adaptations depend on operating conditions and are subject to technical confirmation.

MOLA

UNIVERSAL 900

Mobile shredder - tracked version dimensions

Operating position

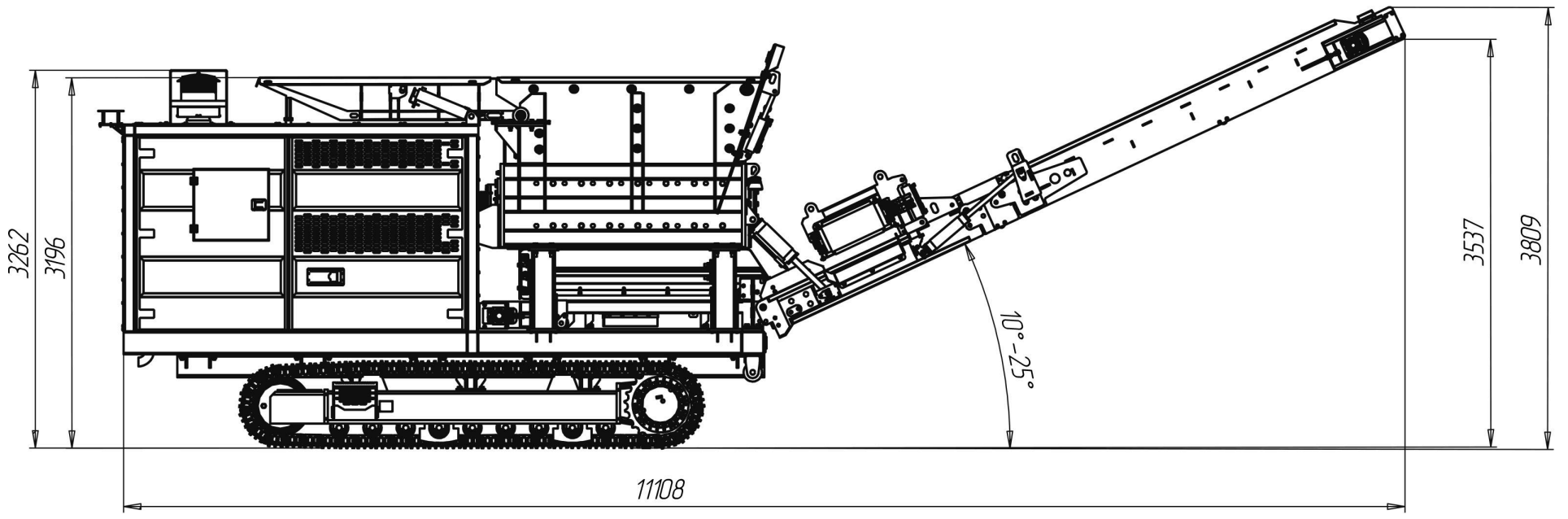

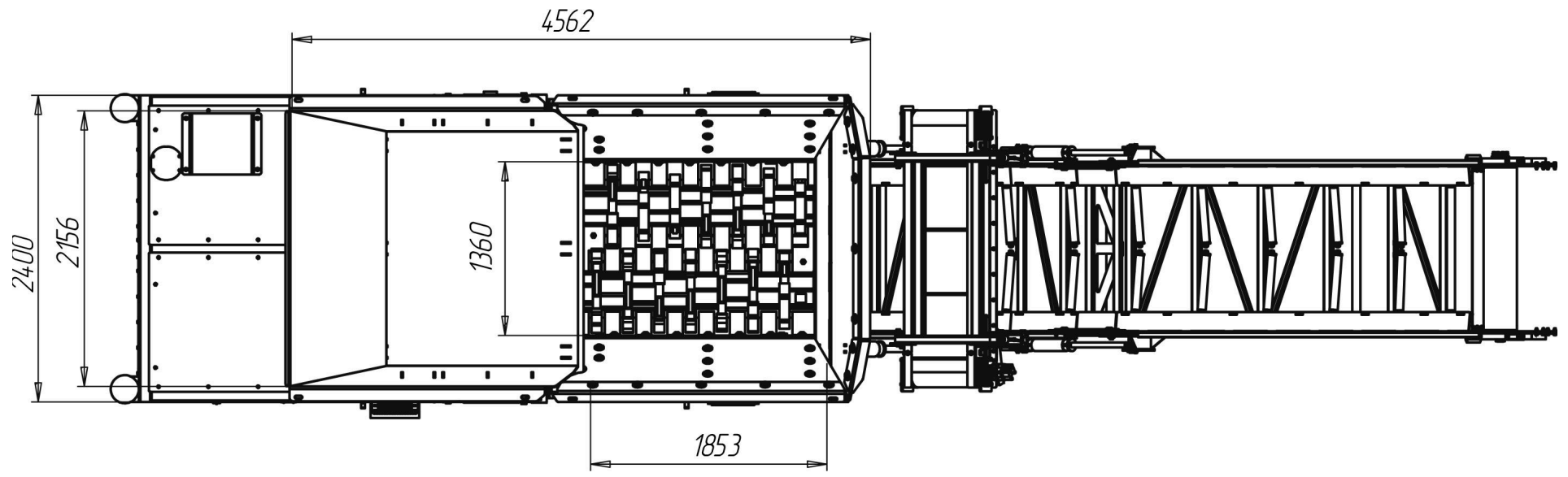

Transport position

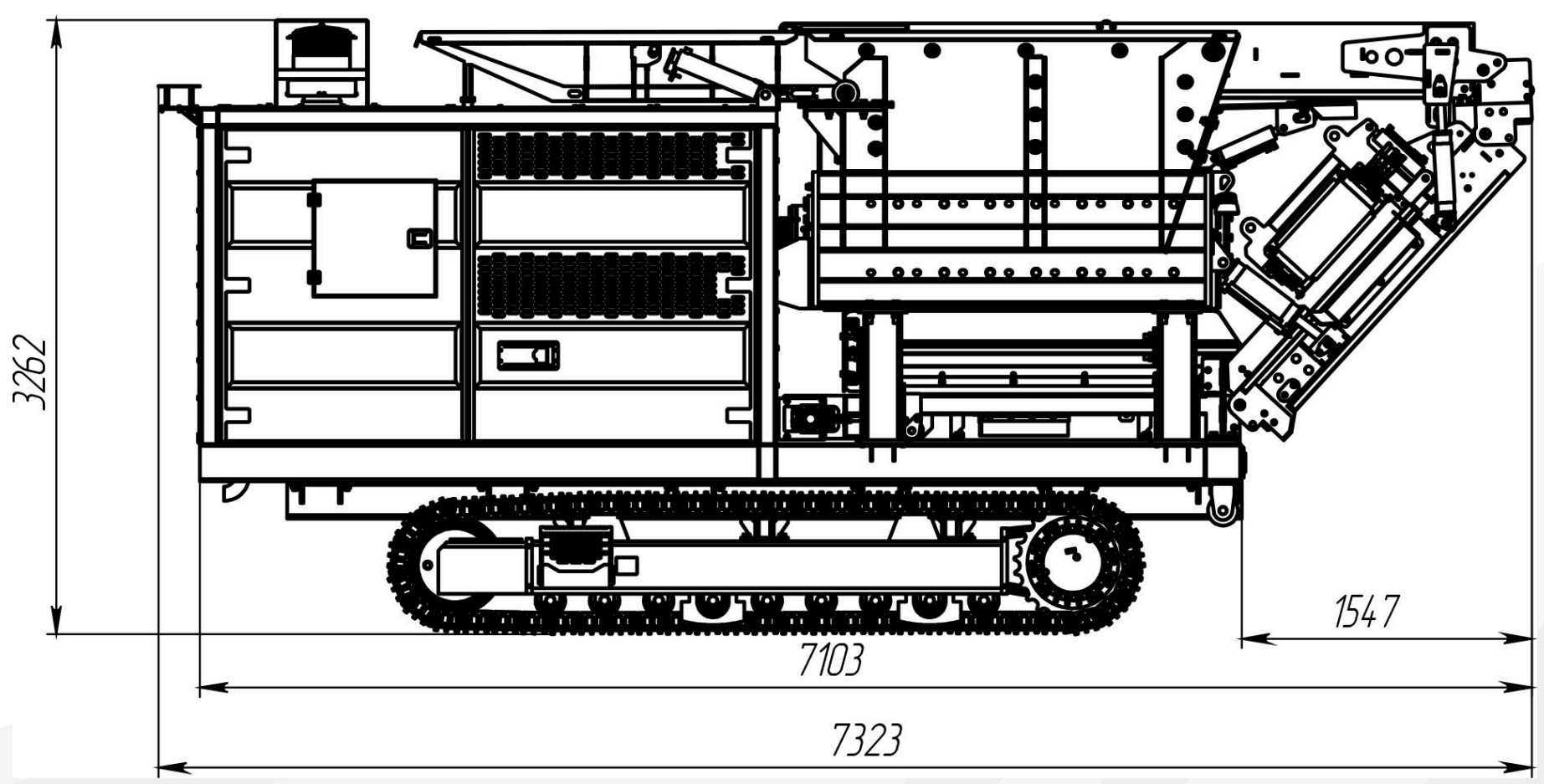

MOLA

UNIVERSAL 900

Mobile shredder - MULTILIFT version dimensions

Operating position

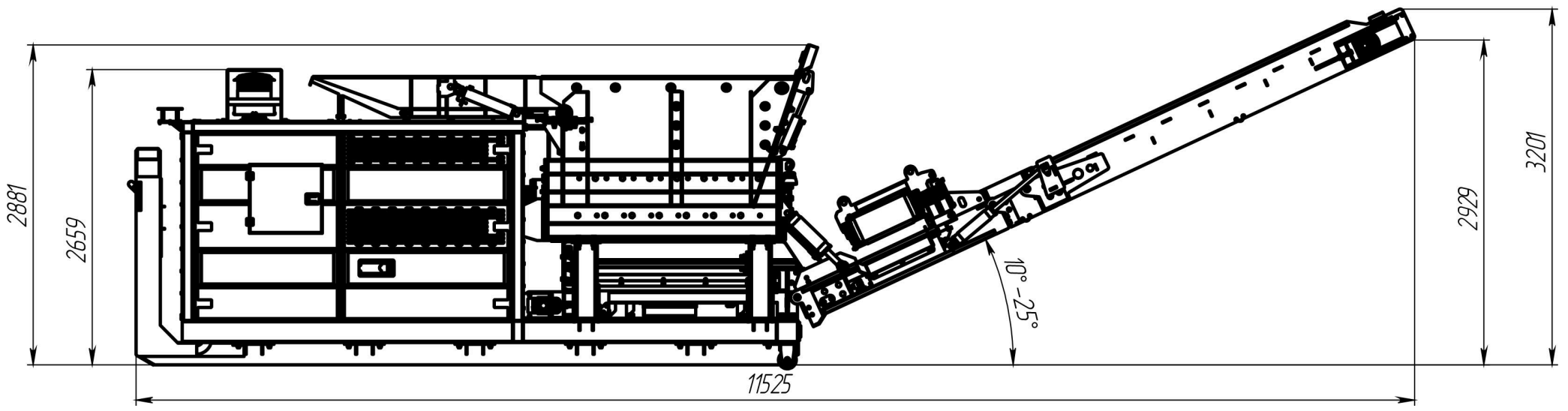

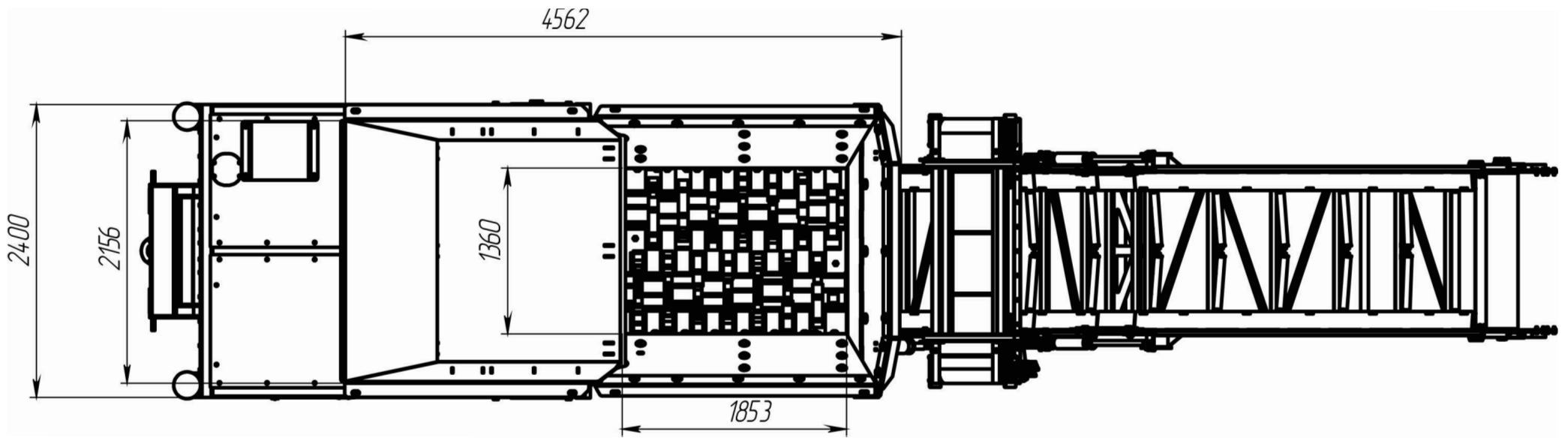

Transport position

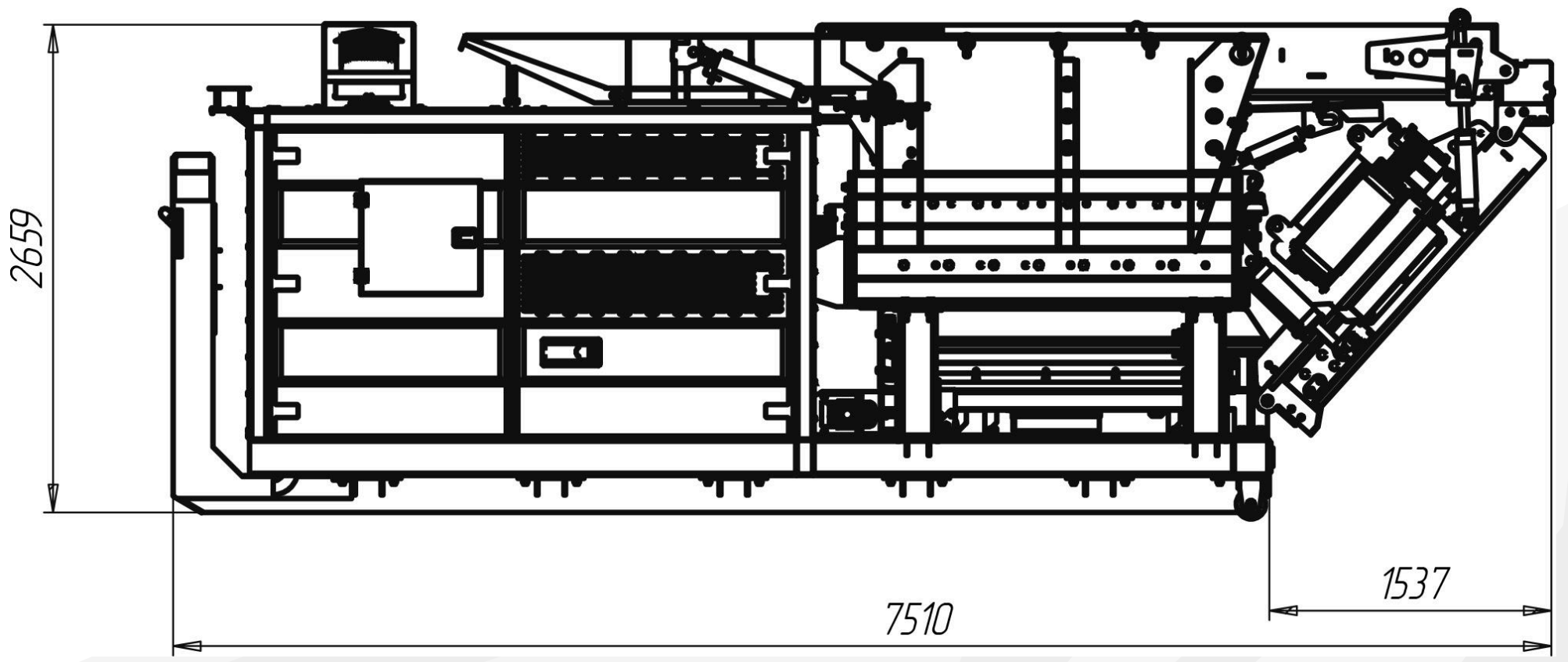

mola-ecoteh.cn

sales@mola-ecoteh.cn