Remote Control System RC 400

Document: 66024
Revision: E
Language: English

scanreco
What do you want to remote?

Contents

1 General 3
1.1 Terminology 3
2 Preface 4
2.1 General information 4
3 General system description 5
3.1 Schematic overview of Scanreco RC-400 5
3.2 General description of Scanreco RC-400 6
3.3 The Portable Control Unit (PCU) 7
3.4 Central unit (CU) 13
3.5 Valve and connection-cables 15
3.6 Crane stop function box (optional) 19
3.7 Battery pack 20
3.8 Battery charger and battery charging 22
4 Safety regulations and operating instructions 25
4.1 Safety regulations 25
4.2 Operating instructions 26
5 Installation Instructions 27
5.1 General schematic of the RC 400 27
5.2 Important notice during welding 27
5.3 Locating the central unit 27
5.4 Mounting recommendations 28
5.5 Cable kit assembly instruction 29
6 Troubleshooting 31
6.1 General information 31
6.2 Indications from the Portable Control Unit 31
6.3 Indications on the Central Unit 33
6.4 Non-functional system 35
7 Programming parameters and settings 36
7.1 General description 36
7.2 Authorisation level 1 37

All rights reserved.

Design, equipment, technical data and specification are subject to change or improvement without prior notice. The text of this manual, or any part thereof, may not be reproduced or transmitted in any form or by any means, electronic or mechanical including photocopying, recording, storage in an information retrieval system, or otherwise, without the prior written permission of Scanreco AB, Sweden.

Document information

Attribute	Information
Document type	Instruction manual
Subtitle	Remote Control System Scanreco RC-400
Document number	66024
Revision	E
Revision date	2020-08-18

Revision history

Revision	Date	Name	Note
A	2008-12-09	SCANRECO AB	First creation of document
B	2009-06-15	SCANRECO AB	
C	2009-09-25	SCANRECO AB	
D	2014-09-08	SCANRECO AB	
E	2020-08-18	SCANRECO AB	

1 General

1.1 Terminonlogy

Abberviation	Description
PCU	Portable Control Unit
CU	Central Unit
LED	Light Emitting Diode
DV	Dump Valve

2 Preface

2.1 General information

This manual is intended as a complement to the crane / machine instruction book and covers the Scanreco RC 400 Remote Control System.

The Scanreco RC 400 offers the driver an extremely advanced remote control system with speed, precision, control and maximum safety.

In order to ensure your safety and the safety of your crane / machine you should study and learn these instructions. This will enable you to quickly familiarise yourself with your new remote control system and how to utilise it.

- Remotely controlled cranes may only be operated by qualified personnel. The driver must be aware of the contents of chapter 4 "Safety regulations and Operating instructions" before operation is started. Serious accidents may occur if these instructions are not followed.
- To protect the portable control unit from damage and for safety reasons, the control unit must be kept in a locked cab.
- Follow the instructions given in the crane handbook regarding moving the crane from its parking position, the best arm positioning while loads are being handled and parking of the crane.
- Due to the unlimited variety of cranes, machines, objects, vehicles and equipment on which the remote control system are used, and the numerous standards which are frequently the subject of varying interpretation, it is impossible for the personnel at Scanreco to provide expert advice regarding the suitability of a given remote control for a specific application. It is the responsibility of the purchaser to determine the suitability of any Scanreco remote control product for an intended application and to insure that it is installed and guarded in accordance with all country, federal, state, local, and private safety and health regulation, codes, standards and Scanreco recommendation (this manual). If the Scanreco RC 400 will be used in a safety critical application, the customer / driver must undertake appropriate testing and evaluation to prevent injury to the ultimate user. Scanreco does not take responsibility for any damage or injure
- Unauthorized tampering with Scanreco automatically invalidates guarantee.

To the operator:

Pause for a while and give yourself extra time to read chapters 3 (General system description) and 4 (Safety regulations and Operating instructions).

To the installer:

Pause for a while and give yourself extra time to read chapters 5 (Installation instructions) and "Inspection / Installation documents”.

3 General system description

3.1 Schematic overview of Scanreco RC-400

The Remote Control System is comprised of the following components (see figure 3.1):

Figure 3.1 Schematic overview of the Scanreco RC-400.

General scope of delivery (see your specification and Figure 3.1).

No	Description	Qty
1	Portable Control unit (PCU)	1
2	Central unit (CU)	1
3	Battery charger	1
4	Battery cassette (NiMH 7.2 VDC)	2
5	Manoeuvre cable (10 meters)	1
6	Emergency stop box (Optional)	1
7	Cable kit supply cables + digital outputs	1
8	Cable kit valves cables (analogue outputs)	1

3.2 General description of Scanreco RC-400

The Scanreco RC 400 remote control system has been especially developed for hydraulically driven mobile cranes and machinery. The system is a digital remote control system based on an extremely advanced microprocessor technology. Years of exhaustive and demanding testing have shown that the remote control system can cope with the roughest of environments.

The system is protected against electromagnetic and radio frequency radiation and can be installed onto all hydraulic valve types (voltage, current pulse width, or protocol steered) found on the market.

In its basic form the remote control system is comprised of a portable control unit with manoeuvre levers for proportional control and switches for ON/OFF functions, a central unit with connection cable for driving proportional electro-hydraulic slide controllers.

Digitally coded control information (lever deflection and switch position) is sent from the control unit via electric cable or via radio to the central unit. The control unit and central unit translate the magnitude and direction of the manoeuvre lever deflections and switch positions to corresponding valve function, speed and direction and thus crane movement.

Important notice:

The Scanreco Remote control system RC-400 described in this instruction manual should be distinguished from the similar Scanreco remote control systems RC-400 G4 as the main components in these two system types product family (Portable control units and central units) are not compatible with each other and varies in appearance and functionality.

3.3 The Portable Control Unit (PCU)

The Portable Control Unit is impact, weather resistant, light weight and compact. The portable control units can be with linear levers or with joysticks (see figure 3.2 below).

Figure 3.2 The available range of portable control units.

No	Description
1	MAXI-Joystick is available for 1-8 (Setup: 2-0-2 / 2-2-2 / 2-3-2 / 3-2-3 / 3-0-3).
2	MAXI-Linear is available for 1-8 linear levers
3	MINI-Joystick is available for 1-6 (Setup: 2-0-2 / 2-2-2).
4	MINI-Linear is available for 1-6 linear levers

The manoeuvre levers and joysticks are fully proportional and have spring return to the zero position, i.e. a "dead-man's-handle". The control units have a stop function which will immediately stop all movement.

All manoeuvre levers/joysticks are protected with a protective frame against unintentional activation and against mechanical damage. The control unit has multi-step micro-speed operation as standard enabling instantaneous temporary reduction of speed. It can also be equipped with a large number of switches for ON/OFF functions. A LED and sound signal are used to indicate such things as operating and battery status and for a simple and diagnostic fault finding (see Figure 3.4).

3.3.1 Battery operation

A battery is located in the lower part of the control unit for radio control operation and is very simple to change.

- The effective operation time of the battery is about 8 hours on one charge.
- When the battery is approaching time for charging, the control unit beeps three (3) times as a warning and at the same time the LED starts to blink on the control unit.
- The battery must be used until the LED goes out, after which it can be changed. If the battery capacity is too low the control unit cannot be activated.
- The battery capacity and operational performance is reduced in extremely cold conditions. The battery is automatically charged during operation by cable control.
- In order to reduce battery loading and for safety reasons, the control unit is turned off automatically, after the unit has been idle for more than approximately five (5) minutes.

3.3.2 Manoeuvre levers / joystick

The control unit is comprised of manoeuvre levers for proportional control, switches for ON/OFF, micro-operation and stop function (see separate headings below).

Figure 3.3 Overview of panel of PCU.

3.3.3 Stop function panel

There is a red stop function switch (**STOP**) with a manual twist reset, a push button and a red LED on the control unit's stop function panel, see figure 3.4.

The control unit is started with the spring reset push button (⏻)

All movement of the crane is stopped if the stop function is activated on the control unit. The red LED indicates operating and battery status.

Figure 3.4 View of a stop function panel.

3.3.4 Changing radio channels

It is possible to change the radio channel by quickly pressing the button marked ⏻ twice. There are 10 different radio channels to switch between by pressing this button in sequence.

Important notice:

Scanreco will introduce an automatic frequency management to the RC400 systems in end of 2009 making the above described function; chapter 3.3.4 changing radio channels, obsolete.

The automatic frequency management ensures a more reliable radio transmission highly resistant to radio interference thanks to intelligent frequency hopping technology automatically handling frequency changes.

The operator then no longer needs to manage radio frequency and the risk of interference is minimized.

This user manual is printed prior to the introduction of the automatic frequency management, for further information; please consult your distributor.

3.3.5 Switch Panels

The switches on the switch panel allow actuation of digital functions via toggle switches and push buttons, see figure 3.5 and 3.6. digital functions can be used to manoeuvre electrical, hydraulic or pneumatic ON/OFF functions. Examples of functions:

- Stopping and starting of the vehicle's motor, throttle lever, beep / signal, change-over valves, function changing for ex. 7:th and 8:th function, etc.

Make sure that you always know which digital functions that are connected for ON/OFF manoeuvring.

Figure 3.5 Left switch panel on MAXI PCU.

Figure 3.6 Left switch panel on MINI PCU.

3.3.6 Micro-speed control

This return spring switch can be used to reduce the operating speed in five (5) steps from 100% to 60%, 50%, 40%, 30% and 20% speed by limiting the hydraulic steering. The regulation of the function's speed is still made over the entire lever stroke and with retained resolution.

- With impulses from the spring loaded toggle switch to the left, towards the turtle , speed reduction can be produced from 100% to 60%, 50%, 40%, 30% and 20% steering.
- Movement of the switch to the right, towards the rabbit , will produce 100% steering once again.
- For safety reasons, a return to 100% steering can only be made if all manoeuvre levers are in their zero positions.
- When the green LED is blinking, the Micro-speed function is activated. The number of blinks indicates the operating speed as defined in the table below. If the stop function is pressed on the controller unit, the controller unit will start from the last chosen speed.

Green LED	Indication
not lit	0 to 100 % speed (normal speed)
1 blink every third second	0 to 60 % speed
2 blink every third second	0 to 50 % speed
3 blink every third second	0 to 40 % speed
4 blink every third second	0 to 30 % speed
5 blink every third second	0 to 20 % speed

3.3.7 Cable for cable control

The control unit can be connected to the central unit via a thin and flexible 5-core cable. The cable has round contacts (M12) at each end.

The cable feeds the digital coded control information from the Portable Control Unit to the Central Unit. The cable is available in standard lengths of 10 meters.

Pin no	Function
1	Data
2	GND
3	RS232 TX
4	RS232 RX
5	+24 VDC

3.3.8 Technical data (PCU)

Item	Technical data
Battery pack	7.2 VDC
Portable Control Unit effective operating time	Approximately 8 hours per charge
Weight / MAXI/Linear	1,95/2,20 kg (without/with battery pack)*
Weight / MAXI/Joystick	1,75/2,00 kg (without/with battery pack)*
Weight / MINI/Linear	1,45/1,70 kg (without/with battery pack)*
Weight / MINI/Joystick	1,30/1,55 kg (without/with battery pack)*
Dimensions MAXI (WxHxD)	350x160x190 mm*
Dimensions MINI (WxHxD)	290x160x190 mm*
IP class	IP65
Ambient temperature (Celsius / Farenheit)	-25°C to +70°C /approx. -15°F to to +160°F

*Weights and dimensions are approximate and depending on configuration.

3.4 Central unit (CU)

The central unit is manufactured in plastic and is provided with contacts for connection to the portable control unit (for cable remote operation), for supply voltage, the electro-hydraulic converter valves, dump valve and ON/OFF functions.

Since the central unit can be exposed to very tough environments, the box is encapsulated to give protection from damp, heat, cold, dust, vibration and corrosive environments.

The central unit has short circuit proof inputs and outputs and has protection against polarity reversal, over-voltage, large incoming voltage transients and EMC / RF. Connection of the central unit can therefore be made without risk of damage. The central unit is delivered for supply voltages of +12 / +24 VDC (+/- 20 %) with negative ground. There is one standard car type fuse located inside the central unit.

Plus fuse: + 10 Amp.

A transformer for standard mains voltages can also be used to provide the central unit with supply voltage. Primary voltage: 110, 115, 220-240, 380, 440 VAC and secondary voltage + 12 / +24 VDC (+/- 10%).

The central unit is equipped with:

1. Standard antenna
2. Operational mode switch (Remote/Manual: See Chapter 4.2 Operational instructions)
3. Cable connector for cable control / Programming port
4. Status LED´s
5. 7-segment LED Display

Figure 3.7 The central unit.

3.4.1 Technical data (CU)

Item	Technical data
Supply voltage	12 VDC / 24 VDC (+/- 20% / max. 5% V peak to peak)
Internal fuse	Plus: + 10 Amp. (Standard car fuse / Red)
Max. over-voltage	Approximately 33 VDC (Fuse blows)
Proportional functions	1 - 8 double operating proportional functions
Dump valve drive	Max. 2,0 Ampere (short circuit proof)
ON/OFF drive	Max. 1,8 Ampere (short circuit proof)
Regulation signals	Voltage or PWM (Other upon request)
Current consumption at idle	40 mA
Weight	1,20 Kg (Valve and connection cables not included)
Dimensions (WxHxD)	227x205x78 mm
IP Class	IP65
Ambient temperature (Celsius / Farenheit)	-25°C to +70°C /approx. -15°F to to +160°F

3.5 Valve and connection-cables

There are several connection cables depending on the valves and the extra functions used. In Figure 3.8 an example of a cable kit to Danfoss valves is shown.

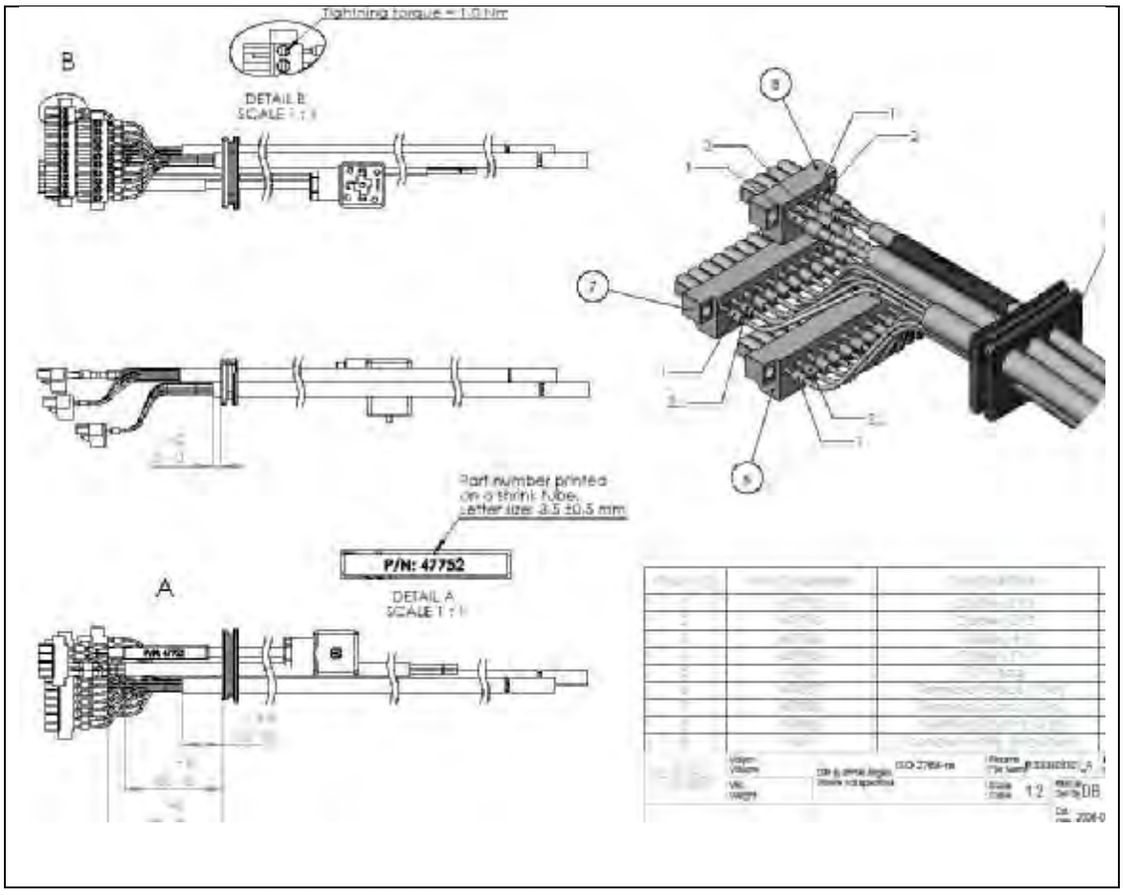

Figure 3.8 An example of a cable kit to Danfoss valves.

3.5.1 Terminal connections

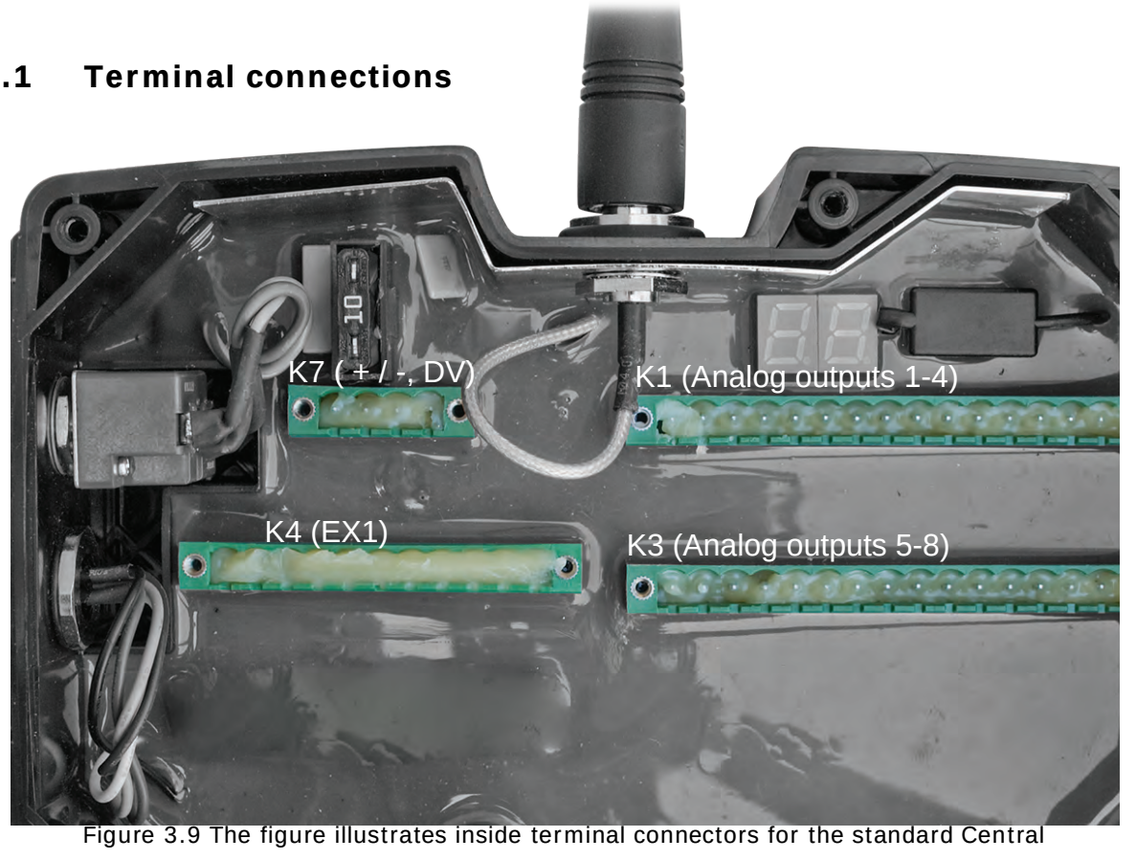

Figure 3.9 The figure illustrates inside terminal connectors for the standard Central Units type 2000 (Danfoss) and type 3000 (PWM).

Important notice:

If a central unit is delivered without pre-mounted cables; the installer is strongly advised to follow the instructions given in chapter 5.5 in this manual, pages 27 and 28; Installation instructions - Cable kit assembly instruction.

3.5.2 Terminal schematics for Danfoss type Central Unit

K7 Main

Pin no.	Description
K7.1	Supply (+12/24 VDC)
K7.2	GND
K7.3	DV +
K7.4	DV GND

K1 Analog outputs

Pin no.	No.	Description
K1.1	1	Danfoss module supply
K1.2		Danfoss regulated supply
K1.3		GND
K1.4		Fault monitor
K1.5	2	Danfoss module supply
K1.6		Danfoss regulated supply
K1.7		GND
K1.8		Fault monitor
K1.9	3	Danfoss module supply
K1.10		Danfoss regulated supply
K1.11		GND
K1.12		Fault monitor
K1.13	4	Danfoss module supply
K1.14		Danfoss regulated supply
K1.15		GND
K1.16		Fault monitor

K3 Analog outputs

Pin no.	No.	Description
K3.1	5	Danfoss module supply
K3.2		Danfoss regulated supply
K3.3		GND
K3.4		Fault monitor
K3.5	6	Danfoss module supply
K3.6		Danfoss regulated supply
K3.7		GND
K3.8		Fault monitor
K3.9	7	Danfoss module supply
K3.10		Danfoss regulated supply
K3.11		GND
K3.12		Fault monitor
K3.13	8	Danfoss module supply
K3.14		Danfoss regulated supply
K3.15		GND
K3.16		Fault monitor

K4 EX1 - Digital outputs / inputs

Pin no.	Description
K4.1	Digital output 1
K4.2	Digital output 2
K4.3	Digital output 3
K4.4	Digital output 4
K4.5	Digital output 5
K4.6	Digital output 6
K4.7	GND
K4.8	Digital input 1
K4.9	Digital input 2
K4.10	Digital input 3
K4.11	Input supply (+VDC)

K6 EX2 - Digital outputs / inputs

Pin no.	Description
K6.1	On / Signal
K6.2	Digital output 7
K6.3	Digital output 8
K6.4	Digital output 9
K6.5	GND
K6.6	Digital output 10
K6.7	Digital output 11
K6.8	Digital output 12 / Digital input 4
K6.9	Digital output 13
K6.10	GND

K8 EX3 - Optional features

Pin no.	Description
K8.1	Customer specific
K8.2	Customer specific
K8.3	Customer specific
K8.4	Customer specific
K8.5	Customer specific

3.5.3 Terminal schematics for PWM type Central Unit

K7 **Main**

Pin no.	Description
K7.1	Supply (+12/24 VDC)
K7.2	GND
K7.3	DV +
K7.4	DV GND

K1 **Analog outputs**

Pin no.	No.	Description
K1.1	1A	PWM +
K1.2		GND
K1.3	1B	PWM +
K1.4		GND
K1.5	2A	PWM +
K1.6		GND
K1.7	2B	PWM +
K1.8		GND
K1.9	3A	PWM +
K1.10		GND
K1.11	3B	PWM +
K1.12		GND
K1.13	4A	PWM +
K1.14		GND
K1.15	4B	PWM +
K1.16		GND

K3 **Analog outputs**

Pin no.	No.	Description
K3.1	5A	PWM +
K3.2		GND
K3.3	5B	PWM +
K3.4		GND
K3.5	6A	PWM +
K3.6		GND
K3.7	6B	PWM +
K3.8		GND
K3.9	7A	PWM +
K3.10		GND
K3.11	7B	PWM +
K3.12		GND
K3.13	8A	PWM +
K3.14		GND
K3.15	8B	PWM +
K3.16		GND

K4 **EX1 - Digital outputs / inputs**

Pin no.	Description
K4.1	Digital output 1
K4.2	Digital output 2
K4.3	Digital output 3
K4.4	Digital output 4
K4.5	Digital output 5
K4.6	Digital output 6
K4.7	GND
K4.8	Digital input 1
K4.9	Digital input 2
K4.10	Digital input 3
K4.11	Input supply (+VDC)

K6 **EX2 - Digital outputs / inputs**

Pin no.	Description
K6.1	On / Signal
K6.2	Digital output 7
K6.3	Digital output 8
K6.4	Digital output 9
K6.5	GND
K6.6	Digital output 10
K6.7	Digital output 11
K6.8	Digital output 12 / Digital input 4
K6.9	Digital output 13
K6.10	GND

K8 **EX3 - Optional features**

Pin no.	Description
K8.1	Customer specific
K8.2	Customer specific
K8.3	Customer specific
K8.4	Customer specific
K8.5	Customer specific

3.6 Crane stop function box (optional)

The crane stop function box is a separate unit for fixed mounting on the vehicle (see figure 3.10). The crane stop function box must be connected between the vehicle battery and the central unit.

- When the stop function is activated the main power supply to the entire remote control system is disconnected.
- The crane stop function must be suitably located and easily accessible.
- Before operation is started, the driver must inform all fellow-workers about the stop function and its location.
- Crane stop function box is not a scope of delivery from Scanreco – it is the installers responsibility.

With the central unit switch in MANUAL position and an electric dump valve, the stop function is also available during manual hand lever operation. (See also chapter 4 "Safety regulations and Operating instructions").

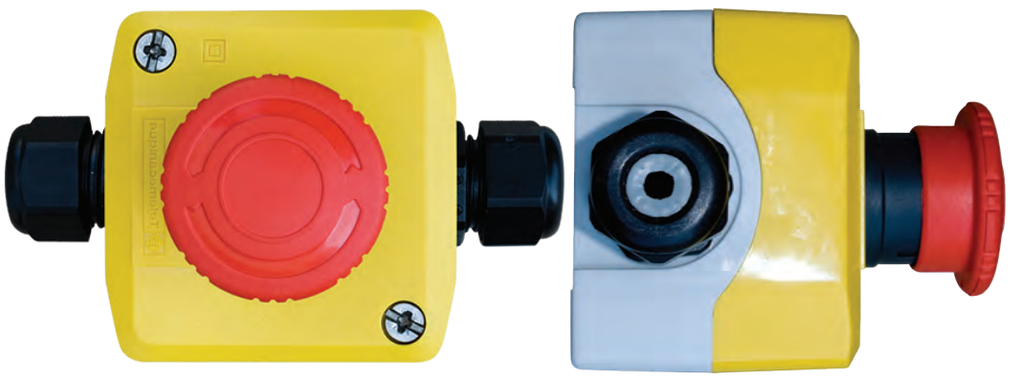

Figure 3.10 Stop function box.

3.7 Battery pack

The battery pack is impact and weather resistant and is located in the battery holder in the Portable Control Unit. The battery pack is rechargeable 7.2 VDC and of Nickel Metal hybrid (*NiMH*) type (see figure 3.11). The battery pack is protected against short circuits.

Figure 3.11 The battery pack.

- The effective operational capacity of the battery is approximately 8 hours per charge.
- When the battery is approaching time for recharging, the control unit beeps three (3) times as a warning and at the same time the LED starts to blink on the control unit.
- The battery must be used until the LED goes out, after which it can be changed. If the battery capacity is too low the control unit cannot be activated.
- The battery capacity and operational performance is reduced in extremely cold conditions. The battery is automatically charged during operation by cable control.
- In order to reduce battery loading and for safety reasons, the control unit is turned off automatically, after the unit has been idle for more than approximately five (5) minutes.

Important notice:

- Use only batteries / battery chargers supplied by Scanreco, Sweden for the specific product.
- Do not charge batteries in hazardous environments.
- Do not attempt to use a battery pack that is damaged, leaking, swollen or corroded.
- Avoid usage of battery / battery charger outside of the specified ambient temperature.

3.7.1 Technical data (Battery)

Item	Technical data
Type	6 Cell NiMH battery
Nominal voltage	7.2 VDC
Weight	0,20 kg
Dimensions (WxHxD)	150x50x28 mm
IP Class	IP65
Ambient temperature (Celsius / Farenheit)	-0°C to +45°C /approx. -32°F to to +115°F

3.8 Battery charger and battery charging

3.8.1 General description

The battery charger is using two different modes of charging. Initially the unit will charge with a high current until the battery is charged, and then it reduces to a trickle charge mode until battery is removed. The normal charging time for an empty battery is approximately 3 hours. The battery charger is designed not to damage the battery even with long continuous charging (see figure 3.12).

Figure 3.12 The battery charger.

3.8.2 Installation

- The battery charger must be mounted in a vibration free area inside the cab or indoors and be protected against damp, direct sunlight and temperature variations.
- Operating ambient temperature is 0° C to +70° C, but could be narrower depending on the battery specification.
- The supply voltage to the battery charger should be +10 VDC to +35 VDC, externally fused with 3.0 Amp fuse.
- The batter charger is constructed so that no damage will occur from long continuous charging.
- Polarity for connection cable: Inc Marked Cable = +
- Maximum power consumption for battery charger with battery: ≈ 400 mA
- Power consumption for battery charger without battery: ≈ 10-20 mA
- After connection the cable connector, put the cable inside the cable track as illustrated in figure 3.13 below.

Figure 3.13 After connecting the cable connector; put the cable inside the cable track.

3.8.3 Operation

The battery charger will start a charge cycle when a new battery is inserted (green LED starts blinking). After approx. 3 hours the battery is charged and ready for use (green LED is continuous ON). If the power supply is lost, the battery charger will remember the charging status and continue with a fast charge mode or trickle charge mode when the power is on again. As a safety precaution the charger will stop charging after 3 hours whether the battery is fully energized or not. The green LED will be continuously ON.

There are two LED indicators on the battery charger:

- Red LED (power) - Indicates supply power.
- Green LED (charging status) is blinking - Battery is charging (the charger is in fast charge mode).
- Green LED (charging status) is continuously ON - Battery is charged (the charger is in trickle charge mode).

3.8.4 Battery charging via cable control

If the operator is using the cable control facility and the battery is placed in the portable control unit, the battery will be charged automatically. The cable control facility could also be used as a battery charger when the system is not used. Place the battery in the portable control unit (stop function pressed) and connect the cable between the portable control unit and the electronic box (emergency stop on the crane released). Charging time is approx. 12-14 hours.

The Central Unit must however be in Remote mode.

3.8.5 Technical data (Battery charger)

Item	Technical data
Supply voltage	10 VDC to 30 VDC
Fuse	Not included: Use only with 3 A. external fuse
Battery charger current consumption without battery pack	≈ 10 - 20 mA
Battery charger current consumption with battery pack	≈ 130 - 140 mA
Weight	0,25 kg
Dimensions (WxHxD)	252x85x36 mm
IP Class	IP21
Ambient temperature (Celsius / Farenheit)	-0°C to +70°C /approx. -32°F to to +160°F

4 Safety regulations and operating instructions

4.1 Safety regulations

These instructions cover those special regulations which apply for remotely controlled cranes (cable or radio). The driver must be aware of the contents of these safety regulations.

Remote controlled cranes may only be operated by trained personnel. The portable control unit must never be passed over to any person who has not received training for remote controlled cranes. If these instructions are not followed, serious accidents can occur.

THE OPERATOR MUST:

- Check that the control unit matches the crane / machine which he is to operate.
- Acquaint himself with the symbols and positions for operating functions and directions.
- Every time before starting work, check the stop function on the portable controller unit by doing the following:
  1. Operate a crane / machine function and press the stop button on the portable controller unit. The crane must immediately come to a standstill. No further crane movements are possible.
  2. If the cranes movement is not interrupted, crane operation must be stopped immediately and a service workshop visited.
- During operation, walk or stand at a suitable distance from the crane to be able to get a good view of the operation. No unauthorised persons may be within the crane's working area.
- Be aware that it is forbidden to convey loads over himself or fellow workers.
- Release all manoeuvre levers (dead-man's-handles) if crane movement control is lost and then immediately press the stop function on the control unit and the emergency stop on the crane.
- The stop function on the control unit should always be in the depressed position whenever the unit is not in use. This applies even for short stoppages, for example, if the driver wishes to move.
- After a completed run, press the stop function on the control unit and on the crane. The control unit must be kept out of reach of unauthorised persons.
- Always report equipment faults or shortcomings to the person responsible for the crane.
- Check that none of the safety devices have been altered or removed.
- Refer to the current regulations / instructions regarding "Personnel lifting with cranes", “Overloading/overload protection ", "Visible signals during the operation of cranes" and "The location of cranes close to airports and high-tension power lines".
- Be aware of any other pertinent regulations and of any local regulations which may apply. These are to be found in the relevant safety regulations regarding crane transport.

- Be aware of the contents in "OPERATING INSTRUCTIONS" and the handling and method of working of the remote control system. See next section "Operating instructions".

4.2 Operating instructions

Before operation, the driver must make himself aware of the contents in the "SAFETY REGULATIONS" for remotely controlled cranes. The driver must be aware of the function of all manoeuvre levers and switches.

1. For remote control: Place the central unit operational mode switch into REMOTE.
2. For manual/emergency operation: Place the central unit operational mode switch into MANUAL. Power is now only supplied to the dump valve and the crane's functions can be manoeuvred directly from the valve's hand levers.
3. Twist up the emergency stop switches on the crane and on the control unit.
4. Cable operation: Connect the control cable between the control unit and the central unit (crane).
5. Radio operation: Place a newly charged battery in the control unit's battery holder.
6. Press ⏻ and the red LED will light continuously.
7. The system is now ready for operation. The driver must be aware of all manoeuvre lever/joystick and switch functions before operation is started.
8. To switch off or to activate the stop function the stop function switches on the control unit and the emergency stop on the crane should be pressed down. The stop function on the control unit should always be in the depressed position whenever the unit is not in use. This applies even for short stoppages, for example, if the driver wishes to move.
9. To ensure a long life for the control unit and for reasons of safety, the control unit must be kept locked in the cab. The control unit should be regularly wiped off with a damp cloth for example.

5 Installation Instructions

5.1 General schematic of the RC 400

When the Scanreco RC 400 is installed an electrically controlled dump valve must, for reasons of safety, always be connected between the manoeuvre valve and the tank. This means that during an emergency stop manoeuvre the dump valve will be without power and will transfer the pump flow directly to the tank thus making the system entirely without hydraulic pressure.

Figure 5.1

5.2 Important notice during welding

Important: It is sometimes necessary to weld a truck/machine. During welding the system's electrical connections must always be disconnected from other equipment, i.e. power supply cables (+ and -), all valve contacts, the EX cables contact must be disconnected.

5.3 Locating the central unit

Important: The central unit must be mounted in accordance with the recommendations given below (see figure 5.2). To ensure the longest possible life for the central unit and its cables, the central unit must always be mounted so that the valve contacts are located facing downwards. The central unit must not be mounted so that the cables face upwards. The reason for this is to hinder water from running via the cables, towards the central unit

(The cables on the central unit are thus not subjected to long periods of accumulated water, damp, salt etc). The central unit should be mounted in a vibration free location and not close to strong heat sources (for example exhaust pipes etc).

Figure 5.2 How to mount the Central Unit.

5.4 Mounting recommendations

- For optimum radio communications the central unit and its antenna should be located as high and free as possible. An antenna screened and surrounded by fixed objects will considerably impair radio reception. An external antenna is available upon request.
- The antenna pin must not touch any metal object.
- The central unit should be mounted in a vibration free location and not be subjected to strong sources of heat (for example exhaust pipes etc).
- Supply and valve cables should be mounted facing downwards!

5.5 Cable kit assembly instruction

In order to maximize product life and prevent involuntary service stops, this cable mounting guide should be consulted before attempting to assemble the cable kit.

If grease is not already applied to the areas shown in the picture, be sure to add water resistant grease suitable for electronic applications in relevant quantities to the areas mentioned.

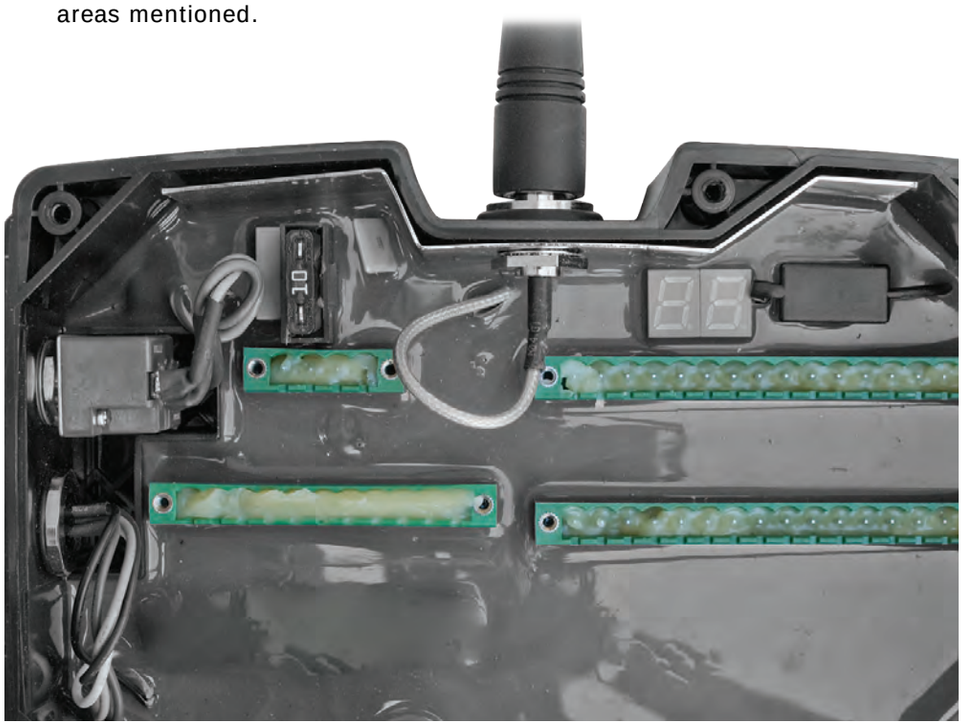

Figure 5.3 Central unit with lid removed.

Pierce the membrane and feed the cable through it. A tight fit ensures a good seal. Secure the cable with a tie strap or similar.

Figure 5.4 Membrane.

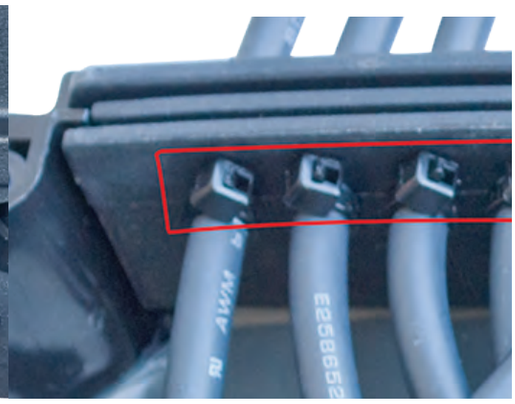

Figure 5.5 Tie strap.

Apply grease as shown on the picture. Cover all exposed metal and fill all cavities.

For best result, apply grease in the cavities on the connector prior to fitting the single wire connectors to it.

Figure 5.7 Cable orientation.

6 Troubleshooting (maintenance/fault finding)

6.1 General information

In the event of non-functionality:

The **operator** can check the following before contacting the service workshop.

The **service workshop** should check the following before distributor or Scanreco AB, Sweden, is contacted.

Always check the Type- and Serial number on the related systems Portable Control Unit and Central Unit before distributor or Scanreco AB, Sweden, is contacted.

6.2 Indications from the Portable Control Unit

Status and alarm indications can be read from the Portable Control Units LED MICRO and LED ON and also via built in buzzer (see figure 6.1).

1 = Left hand side of stop button; LED MICRO

2 = Right hand side of stop button; LED ON

3 = Sound, via internal buzzer

Figure 6.1 Status and alarm indication on portable control unit.

6.2.1 Operational status indications

The Portable Control Unit uses LED ON and LED MICRO to indicate current status and alarms.

A functional system should indicate the following on LED ON:

LED ON lit red; this means that the Portable Control Unit is active and transmitting data towards the Central Unit either via cable or radio.

LED ON flashing red once every second; this means that the battery is approaching time for charging, this indication precedes by the buzzer that beeps three (3) times.

LED MICRO is used to indicate current micro mode

LED MICRO flashing green one, two, three, four or five times every third second; this means that the micro function is active, see chapter 3.3.6 for further information.

6.2.2 Error codes

During start-up of the Portable Central Unit a self test is conducted, any errors found are presented by an error code using ON LED and buzzer flashing/alarming a certain amount of times, the number of times represents a certain error:

Indications	Meaning
1	Lever/Joystick at position 1 not in neutral position at start-up or defective
2	Lever/Joystick at position 2 not in neutral position at start-up or defective
3	Lever/Joystick at position 3 not in neutral position at start-up or defective
4	Lever/Joystick at position 4 not in neutral position at start-up or defective
5	Lever/Joystick at position 5 not in neutral position at start-up or defective
6	Lever/Joystick at position 6 not in neutral position at start-up or defective
7	Lever/Joystick at position 7 not in neutral position at start-up or defective
8	Lever/Joystick at position 8 not in neutral position at start-up or defective
13	Emergency stop failure during self test

6.3 Indications on the Central Unit

Status and error code indications can be read from the Central Units 2 front side LED's (LED DV and LED STATUS) and thru lid window monitoring internal double 7-segment LED display, locations are displayed on below figure. (see figure 6.2).

Figure 6.2 Indicators on the Central Unit.

6.3.1 Operational status indications

Operational status indications can be read from the LED STATUS and LED DV.

A functional system should indicate the following on LED ON:

LED STATUS lit red; Central Unit is in standby mode

LED STATUS lit green; Central Unit is in operational standby mode, or in operational mode

LED STATUS flashing red; Error code sequence (Check double 7-segment LED display for further information.

The LED DV is used to indicate current status for the Dump Valve output

LED DV lit red; Indicates that the DV-output is active

6.3.2 Error codes

The Central Unit will indicate detected errors via the double 7-segment LED display.

If the Central Unit detects an error it will be indicated by the LED STATUS flashing red whilst the the double 7-segment LED display indicates the error code with the digits “Er” followed by four digits in two blocks with the corresponding error code.

Example on error code sequence:

“Er” -> “15” ->”1A” -> ““Er” -> “15” ->”1A” ->“Er” -> “15” ->”1A” ->

The error code sequence will repeat itself three times if the error is considered a soft error and reboot to standby mode, if the error is considered a hard error the error code sequence will be continued until supply power is disconnected.

Below list over error codes and their meaning

Indication		**Meaning**
Block 1	**Block 2**	
01.	01-07	Checksum error (Block 2 declares type)
02.	02	DV output short circuit
04.	01-14	Digital output short circuit (Block 2 declares which output)
07.	1A-8B	Analog output error (Block 2 declares which output)
15.	1A-8B	Analog output short circuit (Block 2 declares which output)
16.	1A-8B	Analog output interruption (Block 2 declares which output)
17.	01	Supply voltage too low
17.	02	Supply voltage too high

6.4 Non-functional system

Always check the following:

- Is there **+**12 VDC / +24 VDC, +/- 20 %, max. 5 %Vpeak to peak supply to the system? Measure at the emergency stop switch (unloaded and loaded).
- Does the system operate via cable control function?
- Does the system work manually, i.e. with the system in MANUAL mode?
- Place switch into **"REMOTE"** position, check and verify how the Central Units LEDs and double 7-segment LED display indicate.
- Activate Portable Control Unit, check and verify how the Portable Control Units LEDs and buzzer indicate.
- Activate each available function one at a time, check and verify how the Central Units and/or Portable Control Unit indicate.

7 Programming parameters and settings

7.1 General description

The Scanreco RC 400 offers considerable possibilities for system constructors of hydraulically driven mobile cranes and machines. The program in the control system is very comprehensive, flexible and has many adaptation possibilities for specific applications. The control system offers simple programming of a number of functions which can easily be turned on or off or altered during operation.

To obtain the best manoeuvre characteristics in the simplest way, all programming / calibration of manoeuvre characteristics is made during operation (so called on-line). All programming / calibration are made from the portable control unit. Programming is simple and does not require tools / instruments.

The control system is furnished with and prepared for 2-way (duplex) communications and for signal handling of functions such as ramp, parallel, lock, "dead-man's", hold, double and overload / lift reduction etc.

The levels of authorisation are divided into four main groups:

- Authorisation level 1 (Installer)
- Authorisation level 2 (Well trained installer, well trained service personnel)
- Authorisation level 3 (Well trained crane and valve manufacturer, well trained system constructor)
- Authorisation level 4 (Scanreco AB, Sweden).

7.2 Authorisation level 1

7.2.1 Changing direction of movement

This describes how changes in direction of movement are made if the crane moves in the opposite direction to that desired.

Example:

After installation and test operation it is found that the 3rd and 5th lever movements operate in the opposite direction to that desired. See the example below for how to change the 3rd and 5th lever movements.

DO AS FOLLOWS

1. Remove the battery pack. Connect the cable between the Portable Control Unit and Central Unit and test run the crane. Then press the stop button on the Portable Control Unit and emergency stop on the crane.
2. Twist up the stop on the Portable Control Unit and on the crane.
3. Press the Portable Control Unit's ON-button. The red LED should light continuously.
4. Produce impulses in very quick succession with spring return switch MICRO to RIGHT in the OFF direction until the Portable Control Unit gives a long beep signal. Wait approx. 12 seconds until the next long beep signal then continue with no 5 below.

   Note 1. The red LED will be extinguished each time the Portable Control Unit gives a beep signal.

   Note. 2. If you do not receive the first long beep signal, start again from no 1 above and execute no 3 and no 4. quicker. No 3 above and no 4. must be executed within max. 5 seconds.
5. Now press ON-button once.

   The Portable Control Unit's built-in beeper will give a short beep once every 5 seconds to confirm that the items above have been done correctly. If any other beep signals are heard you must restart from item 1 again. Now you can easily change direction, see no 6 below.
6. Now you can operate the crane. Move the 3rd control lever (which is operating in the opposite direction to that desired) and give switch MICRO an impulse to the LEFT in the ON direction.

   The crane will now change direction and continue with the same selected speed, in the opposite direction. Do the same with the 5th manoeuvre lever.

   Move the 5th manoeuvre lever (which is operating in the opposite direction to that which is desired) and give toggle switch MICRO an impulse to the LEFT in the ON direction. The crane will now immediately change direction and continue with the same selected speed in the opposite direction. If a direction change has been made earlier for a particular lever, do the same as above but give toggle switch MICRO an impulse to the RIGHT, in the OFF direction.

   Operate and check that all crane directions go in the desired direction.
7. Press the stop button on the Portable Control Unit

   Programming is now completed and the crane is operating in the directions you decided in item 6. For radio operation, remove the cable control and test run the crane.

If you are not satisfied with any direction/directions, repeat the above actions.

G3 Receiver CAN

Product Description

The G3 Receiver is streamlined for all applications that only require a CAN interface. This is the perfect solution if a master controller is allready present on a machine. As standard the receiver is delivered with the CANopen protocol. In addition to the CAN interface, the receiver is equipped with hardwired signals for the stop function.

- Receiver for Maxi, Mini or G3 Rocket Flex transmitters.
- 12 or 24 VDC power supply.
- Radio or cable control option.
- One DV-output (DV1) for control of dump valve.
- One DV-output (DV2) active when system is operational.
- CANopen interface.
- Radio communication at ISM-band using frequency hopping technology.
- 2 safety loop outputs.

TMDEN15010116_D G3B Receiver CAN

Disclaimer: Design, equipment, technical data and specifications are subject to change or improvement without prior notice.

Technical Description

Technical data	Description
Platform	G3
Dimensions (WxHxD)	110 x 140 x 157 mm ~ 4.33 x 5.51 x 6.18 in (including antenna)
Weight	1,2 kg 2.6 lbs
Power Supply	12 or 24 VDC (Absolute maximum ratings 9-36 VDC)
IP-Class	IP67
Cable Interface	M12 connectors
Cable Lenght	0,3 m and 3 m 0.98 and 9.8 ft
Current Consumption	Idle: 65 mA (at 24V) Operational: 100 mA + External loads in operation (at 24V)
Dump Valve Output	Short circuit proof, overload protected, max. 2,7 Ampere load. DV1 is active when any of the levers/joysticks are active. DV2 is active when radio/cable link is active.
Safety Loops	Feed Loop-In with power supply. Once radio/cable link established, Loop-Out goes high. Short circuit proof. Max 2,7 Ampere load.
CAN Bus	CANopen
Radio Module	• TR02 433 MHz Integrated duplex radio ISM-band, RED approved. • TR02 915 MHz Integrated duplex radio ISM-band, FCC/ ISED approved. • TR05 2.4 GHz Integrated duplex radio ISM-band, RED & FCC/ISED approved.
Ambient Temperature	-25°C to +70°C -13F to +158F

Disclaimer: Design, equipment, technical data and specifications are subject to change or improvement without prior notice.

Dimensions

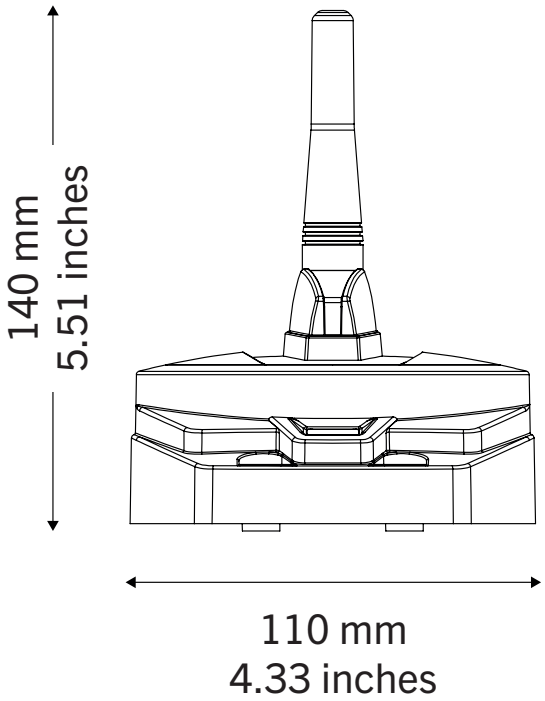

Front view

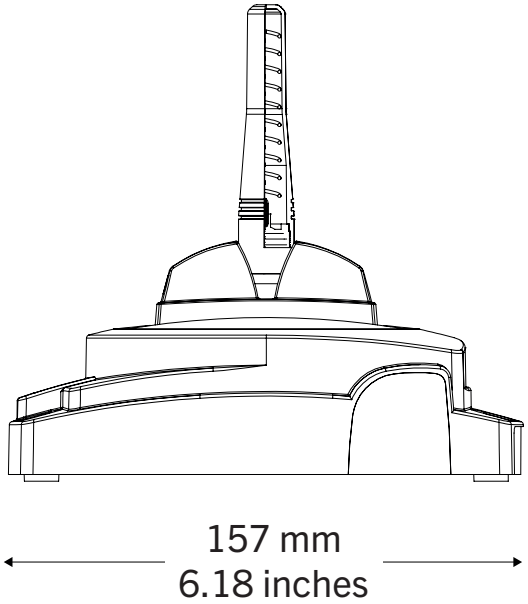

Side view

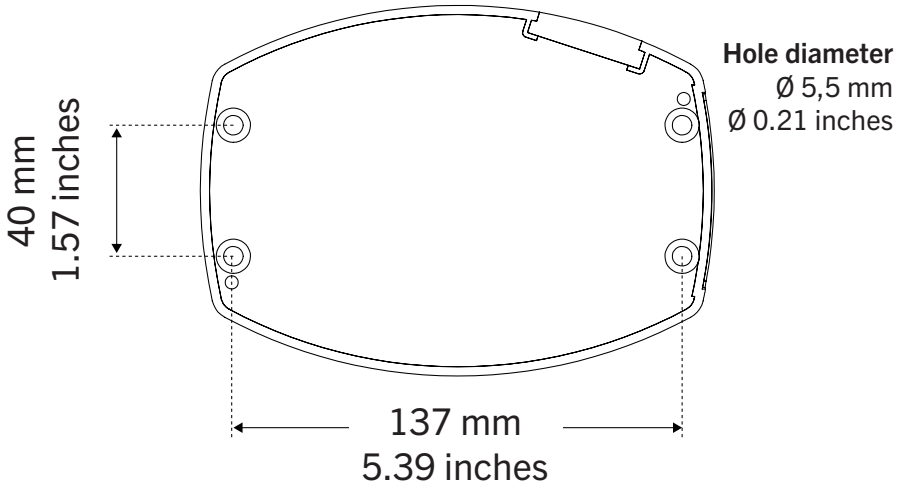

Bottom view

TMDEN15010116_D G3B Receiver CAN

Disclaimer: Design, equipment, technical data and specifications are subject to change or improvement without prior notice.

Pinout

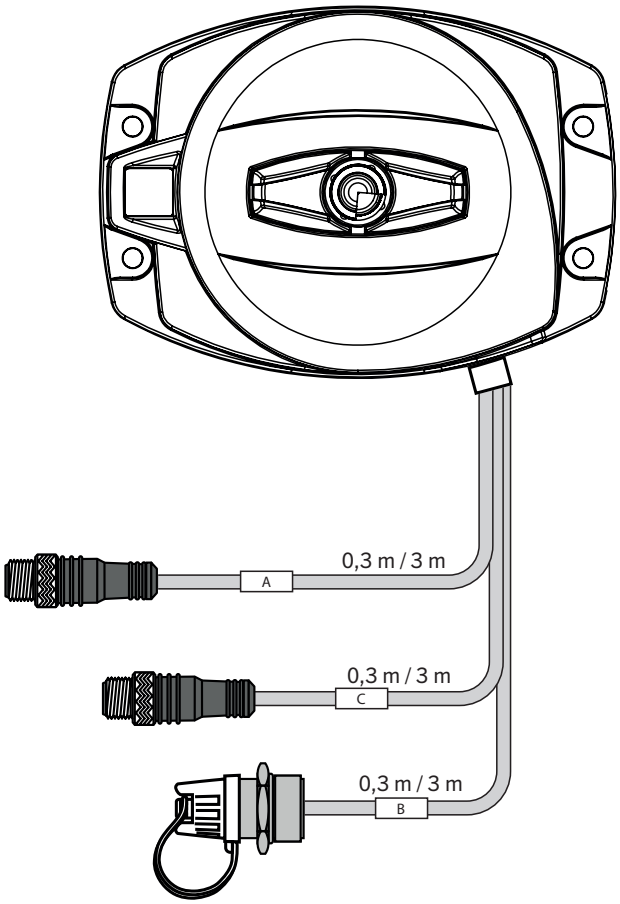

Cable A

Connection	
Pin no.	Colour / Function
1	Brown / DV1+
2	White / Power supply +12/24VDC
3	Blue / GND / CAN_GND
4	Black / CAN_HIGH
5	Grey / CAN_LOW

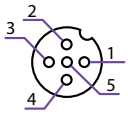

5-pole male
M12 connector

Cable B

Connection	
Pin no.	Colour / Function
1	Brown / Data
2	White / GND
3	Blue / RS 232 TX
4	Black / RS 232 RX
5	Grey / Supply output/CAB+

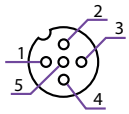

5-pole female
M12 connector

Cable C

Connection	
Pin no.	Colour / Function
1	Brown / DV2+
2	White / LOOP1_OUT
3	Blue / LOOP1_IN
4	Black / LOOP2_OUT
5	Grey / LOOP2_IN

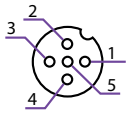

5-pole male
M12 connector

Order Information

Part number	Description	Frequency	Cable lenght
1604	CU CAN Open G3B EU	433-434 MHz (Europe)	3 m
1605	CU CAN Open G3B Nafta HP	902-928 MHz (US)	3 m
1624	CU CAN Open G3B India	447 MHz (India)	3 m
1626	CU CAN Open G3B South Korea	865-867 MHz (South Korea)	3 m
1638	CU CAN Open G3B 2.4GHz	2.4 GHz	0,3 m
1639	CU CAN Open G3B EU	433-434 MHz (EU)	0,3 m
1640	CU CAN Open G3B Nafta HP	902-928 MHz (US)	0,3 m
1641	CU CAN Open G3B 2.4GHz	2.4 GHz	0,3 m
1642	CU CAN Open G3B Japan	429 MHz (Japan)	0,3 m
1653	CU CAN Open G3B 2.4GHz Low Power	2.4 GHz	3 m
1655	CU CAN Open G3B 2.4GHz Low Power	2.4 GHz	0,3 m

NOTICE!

- All receivers are delivered with default program settings.
- If customized software is required, please state the application file number in the purchase order. For example, 1604p1252 or 1605ou1356.

Central Unit G3

Info

This sheet replaces chapters 3.4 and 3.5 in the ordinary instruction manual for radio remote control systems delivered with the G3 CAN Central Unit.

Illustration

Technical data

Platform	G3	
Power supply	9-36 VDC	
IP-class	IP67	
Housing material	Plastic PC	
Cable interface	M12 connectors, see specification below.	
Current consumption	Idle: 65mA (at 24V) Running: 100mA (at 24V)	
Dump valve output (DV1/DV2)	Short circuit proof, overload protected, max. 2.7 Ampere load. DV1 is active when any lever/joystick is active. DV2 is active when radio/cable link is active.	
Safety loop	Loop In — Loop Out connected while radio/cable link established. Short circuit proof, overload protected. Max 2.7 Ampere load.	
CANBUS	CANopen	
Radio module	TR02 RC400 Integrated duplex radio ISM-band, RED approved. TR02 RC400 Integrated duplex radio ISM-band, FCC/ISED approved. TR05 RC400 Integrated duplex radio ISM-band, RED & FCC/ISED approved.	
Ambient temperature	-25°C to +70°C	Approx. -15°F to 160°F

Manual: TMM1312021_E

Cable assignments

Cable A

Connection	
Pin no.	Colour / Function
1	Brown / DV1
2	White /Power supply
3	Blue / GND
4	Black / CAN_HIGH
5	Grey / CAN_LOW

5-pole **male** M12 connector

Cable B

Connection	
Pin no.	Colour / Function
1	Brown / Data
2	White / GND
3	Blue / RS 232 TX
4	Black / RS 232 RX
5	Grey / Supply output

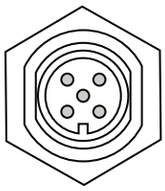

5-pole **female** M12 connector

Cable C

Connection	
Pin no.	Colour / Function
1	Brown / DV2
2	White / LOOP1_OUT
3	Blue / LOOP1_IN
4	Black / LOOP2_OUT
5	Grey / LOOP2_IN

5-pole **male** M12 connector

Dimensions

Height (including antenna)	140mm
Length	157mm
Width	110mm
Cable A	0,3/3m
Cable B	0,3/3m
Cable C	0,3/3m

Manual: TMM1312021_E

Nanjing Scan-Se Intelligent Science & Technolohy Co.,Ltd

Address:1st Floor,Building A3,Hongfeng Science and Technology Park, Nanjing Economic and Technology Development Zone

Website: www.scan-se.com.cn

Tel:13813964199

scanreco

What do you want to remote?