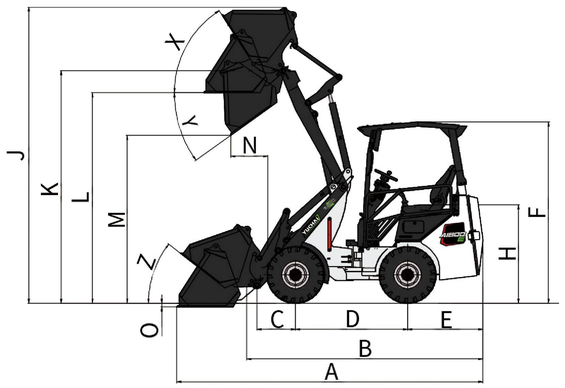

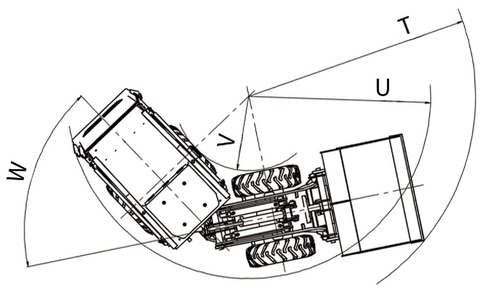

A1800E Performance Parameters

Basic parameters	
Machine Weight	1880 kg
Tipping load with bucket-straight machine	800 kg
Tipping load with bucket-pivoted machine	500 kg
Tipping load with pallet fork-straight machine	520 kg
Tipping load with pallet fork pivoted machine	320 kg
Max.traveling speed	0-15 km/h
Hydraulic System	
Pure electric control	
Working pressure	18 Mpa
Battery system	
Battery Lithium Iron	21.3 kWh
Standard endurance	⩾ 7 h
Drive System	
Wheel side motor driving	
Wheel side Auto Hold	
Operating parameters	
A Overall Length	3850 mm
B Overall Length(Without bucket)	3000 mm
C Axle middle to Bucket Pin	461 mm
D Wheelbase	1345 mm
E Rear Overhang	904 mm
F Overall Height	2138 mm
H Seat Height	1178 mm
J Overall Operating Height	3547 mm
K Height of Bucket Pivot (Max.)	2781 mm
L Loading-Over Height	2518 mm
M Dumping Height	2007 mm
N Bucket to Front Wheel Distance (Dumping)	447 mm
O Digging Depth	55 mm
P Overall Width (Wide Tire/Narrow Tire)	1106/930 mm
Q Track Width (Wide Tire/Narrow Tire)	801/740 mm
S Ground Clearance	198 mm
T Min. Radius External	2268 mm
U Radius at the Outer edge	1796 mm
V Inside Turning Radius	653 mm
W Inclination Angle	58 °
X Rollback Angle at Max.Lifting Height	57 °
Y Dumping Angle (Max.)	35 °
Z Rollback Angle (on the ground)	38 °

Specifications are subject to change without prior notice .

Electric Wheel Loader

Lithium Iron Battery : 21.3kWh

Standard endurance: ⩾ 7 h | 10 % → 90 % in 1.5 hours

Machine Weight: 1880 kg | Max.traveling speed : 15 km/h

Overall dimensions (L x W x H): 3850mm x 1106/930mm x 2138 mm

A1800E

GUANGXI YUCHAI EQUIPMENT TECHNOLOGY CO. , LTD.

Address: Yuchai Engineering Machinery Industry Center, Luchuan,Yulin,Guangxi, China

Email: dig@yuchai.com,ychi-export@yuchai.com | Website: www.yuchaicm.com

Tel: +86-775-3223503 | Fax: +86-775-3223503

Facebook

Yuchai – A1800E Electric wheel loader

Yuchai A1800E mini articulated loader is a pure electric loader developed by Yuchai for customers in the agricultural and gardening industries. This product adopts Yuchai's newly designed dedicated electric platform, which not only achieves "zero emission, low noise" environmentally friendly operation, but also has outstanding advantages such as one machine with multiple functions, convenient operation and low maintenance cost. It is an ideal equipment for various application scenarios such as animal husbandry, planting and garden maintenance.

Zero Emissions, Low Noise

The A180E features a pure electric drive design. During operation, it eliminates the roar of diesel engines and unpleasant odors, with significantly lower noise levels. For agricultural users, especially those in the livestock farming users, this machine creates a more comfortable environment for both operators and animals.

All-New Dedicated Electric Platform

Developed from the ground up on an electric platform, it features an integrated layout for the battery pack, motor, and electronic control system. While accommodating a high-capacity battery (21.3 kWh), it optimizes the overall center of gravity distribution, enhancing stability and maneuverability.

The adoption of dedicated motors and transmission systems ensures precise power output matching for loader operating conditions (e.g., heavy loads, slope climbing), delivering higher efficiency.

- Battery capacity increased by **40%**
- **Wheel side motor driving**
- Wheel side **AUTO HOLD**
- Traction force increased by **18.8%**
- Operation stability increased by **7.5%**
- Battery life increased by **50%**
- 360° rotation function in place
- Saving **91%** on fuel costs
- Zero maintenance 2000 hours

1 Wheel-Side Drive Technology

Yuchai pioneers wheel-side drive technology in compact construction machinery, featuring independent controllers and motors for each wheel. This enables separate control of hydraulic and travel systems with non-interfering power distribution. Torque remains consistent regardless of rotational speed, delivering robust power even at low speeds.

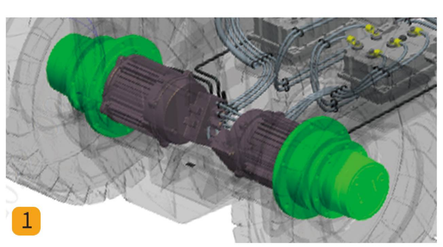

Wheel side motor driving

360°-Articulated loader

Wheel-End Parking Technology

The **A1800E** features integrated wheel-end parking functionality (**AUTO HOLD**). Combining mechanical brake discs with wheel-side motors, it provides dual parking modes with automatic hold capability. When stationary with the travel direction set to neutral, the brake automatically engages, enabling operators to work more safely.

High-Capacity LFP Battery

Via its inverter, the machine transforms into a large power bank capable of 220V/10A output to support various electric tools. With 5,000 charge cycles (equivalent to 16 years of service) and ≤6% performance degradation over 8 years, its intelligent overload protection safeguards the battery/motor system. Yuchai further backs the battery with a 5-year warranty, eliminating traditional engine reliability concerns.

Stable and Reliable Battery, Motor & Control System

The A180E shares identical battery and electronic control systems with Yuchai's S35 skid steer loader. Its supply chain leverages top-tier enterprises from China's EV industry. Having undergone rigorous long-term testing in China's demanding operational environments, the electrical systems of both A1800E loaders and S35 skid steer loader have proven their stability and reliability.

External discharge power: 3.3kW 1

Safe & Reliable — **Battery Advantages**

30000 Working Hours — Fast charging: **60** Minutes; Battery level from 30% to 80%

16 Years Working Life — Recharge with new energy after work. Start working after work.

Safety — Overload protection; Stop when fully charged to protect the battery

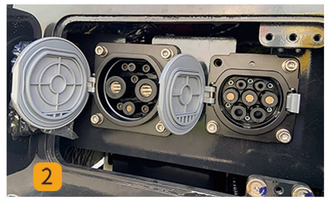

Charging port

Yuchai– A1800E Electric wheel loader

90% Lower Operating Costs Than Conventional Fuel-Powered Models

By adopting a pure electric direct-drive design, the A1800E eliminates traditional engine + gearbox transmission systems. With in 2,000 operating hours, its combined operating and maintenance costs are 90% lower than diesel equivalents (calculation based on China's electricity and fuel prices).

Convenient and Rapid Charging

The A1800E offers dual charging options: 220V/16A (standard) and 380V/32A (rapid charging, optional), with charge ports configurable to European, American, or Chinese standards. In standard mode, replenishing power requires only connection to mains electricity. When using rapid charging equipment, it achieves 10%-90% SOC recharge in just 1.5 hour.

Comfort and performance

Based on extensive feedback from European users, the Seat Index Point (SIP) has been precisely calibrated to ensure optimal driving comfort.

1 The **FOPS/TOPS canopy** ensures the driver's safety

2 The A1800E model is equipped with an electric proportional joystick, which controls the adjustment movements of the lifting arm and the working implement.

Indicator device

Wide and comfortable foot space

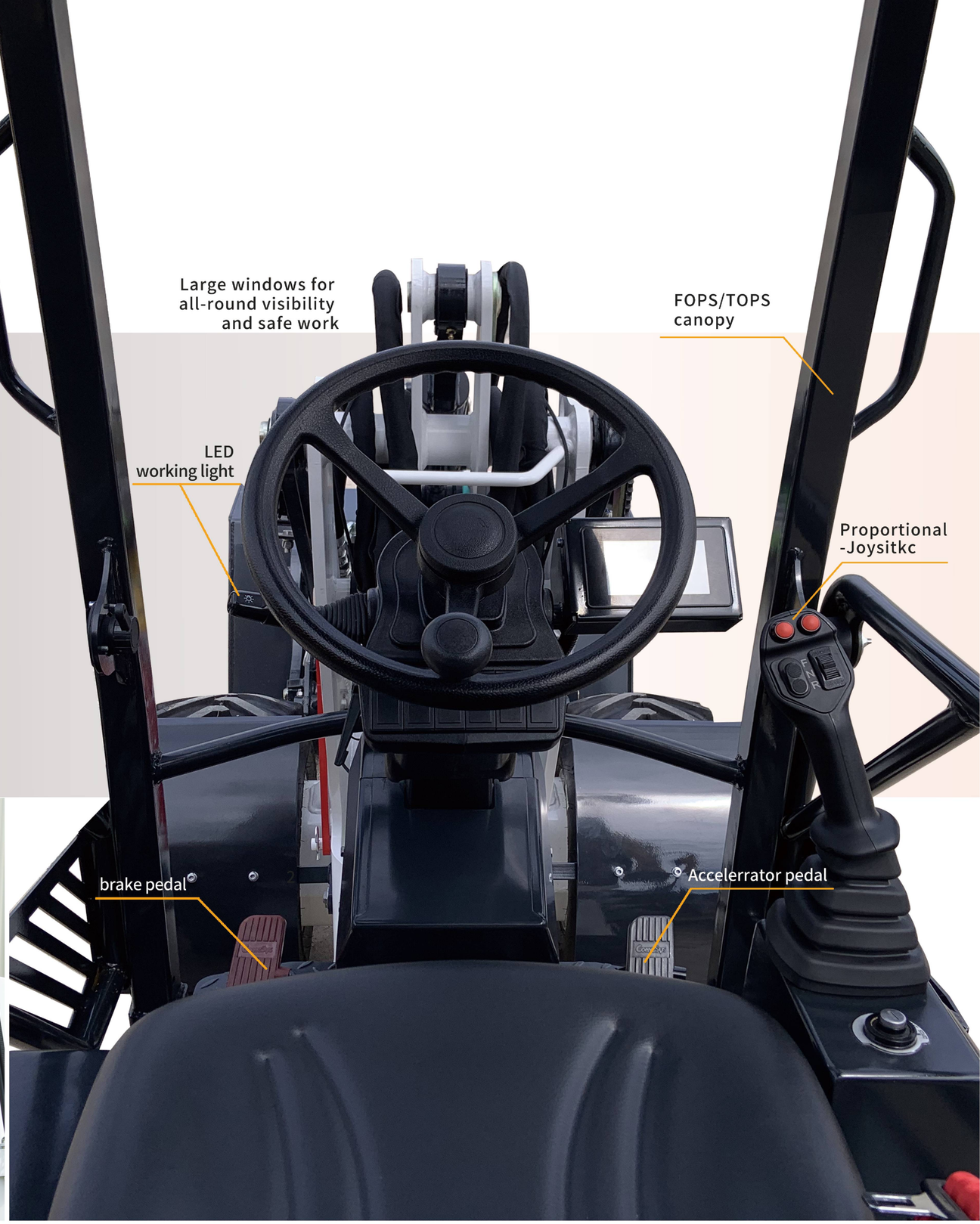

Large windows for all-round visibility and safe work

Simplified Maintenance Design

The A1800E incorporates a large-opening maintenance design, allowing access to the power and equipment compartments in just a few simple steps. This provides direct access to batteries, controllers, pumps, and motors, making machine maintenance simpler and more time-efficient. A major advantage of electric machinery is significantly reduced overall maintenance compared to diesel-engine machines.

Simple maintenance, full control.

With the Yuchai A1800E, servicing is easier and more efficient.

The Yuchai A1800E electric loader is designed with user-friendly maintenance in mind. The engine hood opens upwards, and both the operator' s seat and multiple access covers can be removed in just a few steps — giving you quick and easy access to key components like the hydraulic control block, electric motors, battery, and pump systems.

Chassis & Safety Systems

The entire vehicle is made of high-strength structural steel, which has strong impact resistance and is more suitable for harsh working conditions.

The battery pack features multiple safety protections: dust-proof, water-proof, short-circuit-proof, and impact-proof, meeting the IP67 standard.

The automatic braking system and operation locking device enhance operational safety.

Electronic fence: Effectively reminds of avoidance and ensures construction safety

safety extensions

Automatic braking system (AUTO HOLD)

Actuation lock against unintended use

Electronic fence:

Effectively reminds of avoidance and ensures construction safety

Konstruierte Wartungsfreundlichkeit

The foldable engine hood, quickly detachable driver's seat, and accessible service flaps allow direct access to key components.

Hydraulic manifold block

Electric motors

Battery system

Pump assemblies

Maintenance advantages compared to diesel engines

More than 40% reduced maintenance work

No regular oil changes/filter replacements

Reduced downtime

Significantly lower operating costs

Luftreifen

Narrow Tires(optional)

01 reducing piece

02 steering lock bar

03 Inspection-friendly accessibility of the main components

04 External discharge

Modular design

Battery, electric control, and hydraulic system facilitate maintenance and replacement.

Equipment

- Standards and requirements for special equipment vary by country.
- For more details on equipment options, please feel free to contact us.

Component Part	Description	Standard	Optional
Drive system	Wheel-Side Drive Technology	•	
	Wheel-Side Parking Technology（AUTO HOLD)	•	
Battery	LFP-battery (Lithium Iron Phosphate), 21.29 kWH/96V	•	
Charger	On-board charger, 220V/16A (228Ah battery charging time: 6.5 hours)	•	
	Fast charger 110V/114A (228Ah charging time: 1.5 hours)		•
	External discharge power: 3.3kW	•	
	Adapter cable GB/T–16A, 5 meters	•	
Canopy	ROPS/FOPS Canopy	•	
	Fixed skylight	•	
	Left and right guardrails	•	
	Left and right rearview mirrors	•	
	Seat belts	•	
	Touch screen	•	
	Electric proportional joystick	•	
	Fully electric pedal	•	
	Adjustable steering wheel	•	
	Flip cockpit cover	•	
	Side mirrors (L+R)	•	
Hydraulic connections	AUX 1 with double-acting hydraulic function	•	
	Quick connector	•	
Electrics/Lighting	Work light (LED) for lifting arm	•	
	Work light (LED) for on canopy (max. 2)	•	
	Rear work light (LED) (max. 1)	•	
	Beacon (LED) on canopy	•	
	Position light (LED)	•	
Options	Customized color		•
	Narrow Tires		•
	Reversing buzzer alarm		•
	Mudguard wideners		•
	Pallet fork		•
	Multi-service bucket		•
	Round bale tongs		•
	Sweeper		•
	Small shear grab		•

4-in-1 bucket

Multi-service bucket

Pallet fork

Round bale tongs

Attachments

The perfect attachment for every job.

- Turn your machine into a true all-rounder.
- The right attachment transforms your machine into a powerful, versatile solution for any task.