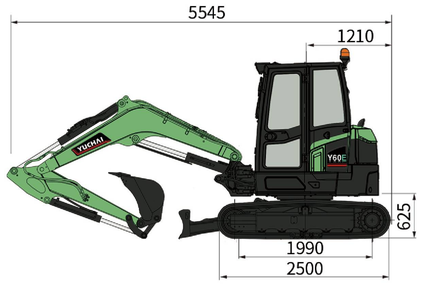

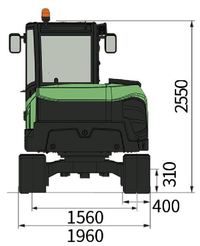

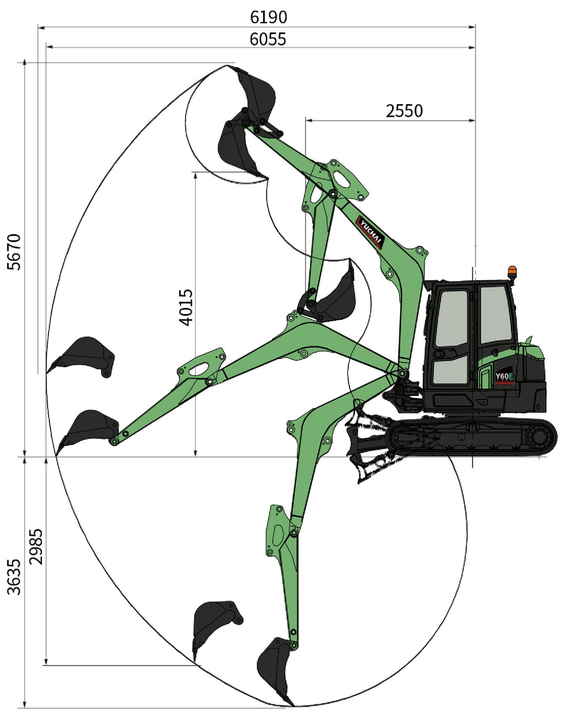

Y60E Technical Specification

Basic parameters	
Machine weight	5950 kg
Bucket capacity	0.18 m^3
Performance parameters	
Battery Lithium Iron	105 kWh
Battery voltage	347.76 V
Motor power	32/60 kW
Standard endurance	4~5 h
Fast charging time	1.5 h (80kW charger)
Slow charging time	18 h (6.6kW charger)
Max. gradeability	30 °
Max. digging force of bucket	45 kN
Max. digging force of arm	26kN
Traveling speed	3.6/2.2 km/h
Max. hauling force	46.5 kN
Slewing speed of platform	10 rpm
Operating parameters	
Max. digging height	5670 mm
Max. digging depth	3635 mm
Max. digging radius	6190 mm
Max. digging radius on ground level	6055 mm
Max. dumping height	4015 mm
Min. slewing radius	2550 mm
Max. vertical digging depth	2985 mm
Transportation dimension	
Overall length	5545 mm
Overall width	1960 mm
Overall height	2550 mm
Other parameters	
Width of undercarriage	1960 mm
Length of track	2500 mm
Width of track	400 mm
Minimum ground clearance	310 mm
Height between platform and ground	625 mm
Platform tail turning radius	1210 mm
Track gauge	1560 mm
Hydraulic oil tank capacity	70 L
Flow rate	158.4 L/min
Boom length	2795 mm
Arm length (standard/longer)	1635 mm
Bulldozer Dimensions	1960×420
Maximum Bulldozer Lift	440 mm
Steering head angle	70°(L)/53°(R)

Specifications are subject to change without prior notice .

GUANGXI YUCHAI EQUIPMENT TECHNOLOGY CO. , LTD.
Address: Yuchai Engineering Machinery Industry Center, Luchuan, Guangxi,China
Email: dig@yuchai.com,ychi-export@yuchai.com | Website: www.yuchaicm.com
Tel: +86-775-3223503 | Fax: +86-775-3223503

Facebook

YUCHAI

ELECTRIC EXCAVATOR

Machine weight : 5950 kg | Battery Lithium Iron : 105 kWh
10%→90% in 1.5 hours | Standard endurance: 4~5 h
Overall dimensions (L x W x H): 5545mm x 1960mm x 2550 mm

Y60E

Yuchai– Pioneering Compact Construction Solutions

Yuchai, the manufacturer of China's first mini excavator (Model: WY 4, 1990) and a professional producer of compact construction equipment, brings you the all-new Yuchai Y60E electric excavator.
This powerhouse mini excavator delivers exceptional capabilities that surpass expectations – whether you're new to Yuchai or a longtime partner – redefining operational excellence on every jobsite.

Y60E Electric Excavator

– Green Power · Multiple functions

The Y60E electric excavatorr is It is suitable for a wide range of projects such as building construction, urban development, road maintenance, and landscaping development.

- Developed specifically for environmentally sensitive areas;
- Pure electric drive system, green and energy-saving, with low maintenance cost;
- One machine with multiple uses, compatible with various attachments, meeting the application requirements of multiple scenarios.

Compact Design, Green Power, Superior Performance:

- Equipped with a high-efficiency electric drive system and a compact, flexible structural design, it not only achieves eco-friendly operations featuring zero emissions and low noise but also boasts prominent advantages including multi-functionality.
- Largest battery capacity among 6-ton class short -tail electric excavators.
- Leading Integrated & Intelligent Configuration.
- Yuchai's self-developed RFCS (Real-time Feed back Control System).

Exceptional Hydraulic Design

- Load-sensing hydraulic system with 27.5 MPa working pressure and 120 L/min maximumauxiliary circuit flow.
- Standard dual auxiliary hydraulic circuits compatible with >90% of market attachments.

Pressure-Adjustable Circuit

- AUX 1 features adjustable pressure to accommodate diverse attachment requirements.

Optional Hydraulic Quick Couplers

- Factory-equipped quick Couplers for efficient attachment changes.

Expertly tuned load-sensing system by Yuchai Hydraulic Technology Team delivers exceptionally smooth operation.

Compact Dimensions

Space-optimized design for operation in confined spaces

Distributor

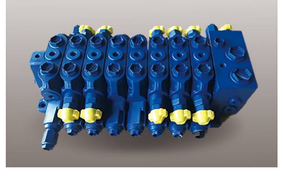

Pump

Traveling motor

Slewing motor

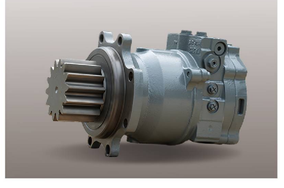

Dozer Blade Float Function

- Integrated float mode for grading and leveling operations. You don' t need to adjust the dozer height to make a clean ground surface —after backfilling, just travel backward along the covered ditch with the dozer in the float position. Ground finishing work is now fast and easy!

High-Capacity LFP Battery

Via its inverter, the machine transforms into a large power bank capable of 220V/10A output to support various electric tools. With 5,000 charge cycles (equivalent to 16 years of service) and ≤6% performance degradation over 8 years, its intelligent overload protection safeguards the battery/motor system. Yuchai further backs the battery with a 5-year warranty, eliminating traditional engine reliability concerns.

Stable and Reliable Battery, Motor & Control System

The Y06E Electric Excavator hares identical battery and electronic control systems with Yuchai's S150 skid steer loader. Its supply chain leverages top-tier enterprises from China's EV industry. Having undergone rigorous long-term testing in China's demanding operational environments, the electrical systems of both Y60E Electric Excavator have proven their stability and reliability.

Safe & Reliable — Battery Advantages

- **30000** Working Hours — Fast charging: **80** Minutes; Battery level from 30% to 80%
- **16** Years Working Life — Recharge with new energy after work. Start working after work.
- **Safety** — Overload protection; Stop when fully charged to protect the battery

External discharge power: 3.5kW 1

Yuchai– Y60E Electric Excavator

90% Lower Operating Costs Than Conventional Fuel-Powered Models

By adopting a pure electric direct-drive design, the Y60E eliminates traditional engine + gearbox transmission systems. With 2,000 operating hours, its combined operating and maintenance costs are 90% lower than diesel equivalents (calculation based on China's electricity and fuel prices).

2 Optional CCS2 40KW European standard fast charging

AC/220V/110V et.

AC Charging Station

Convenient and Rapid Charging

Equipped with a high-capacity 105 kWh lithium iron battery, the machine delivers 6–8 hours of continuous operation on a single charge, ensuring stable performance throughout demanding working cycles. Featuring the largest battery capacity in the 6-ton class electric excavator segment, it minimizes charging downtime, enhances jobsite productivity, and provides operators with greater flexibility and reliability.

Premium Cab
Where safety meets comfort

Industry-leading ergonomic design for compact excavators

The cab, equipped with a Tip-Over Protective Structure (TOPS) ,and Falling Object Protective Structure (FOPS), is available as an option along with additional features such as a radio, an elastic fabric seat with a high backrest and headrest, a heater, and safety elements including seat belts and a safety hammer, offers multifaceted advantages, providing the operator with both comfort and safety.

- Precisely positioned Seat Index Point (SIP) based on 37+ years of European user feedback data, paired with vibration-damped suspension seats for ultimate comfort.
- Newly designed cab provides generous legroom;
- CAN BUS-integrated control panel with centralized interface simplifies operation;
- Intelligent Power Module (IPM) with automated fault diagnostics;
- Wireless smartphone charging (20W fast-charging supported);
- Rear camera enhances operational safety.

Rear camera

Concise user interface

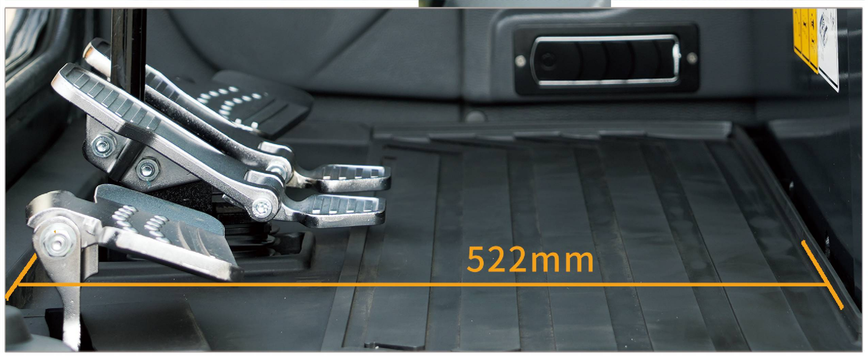

7-inch touch screen

Wide and comfortable foot space

Spacious and comfortable cabin

Simple and Convenience Maintenance

- Opening bonnet design optimum arrangement of internal parts for quick and efficient service and a shorter downtime.
- Metal covers are stronger and easier to repair.

High Cost-Performance

The Y60E electric excavator delivers exceptional cost-performance. With its heavy-duty structure, powerful engine, and versatile capabilities, the Y60E maximizes your investment return. Its efficient and reliable performance enables you to complete construction and excavation projects with the lowest operating costs and highest productivity. More than just a purchase, the U60 is a long-term investment in your operational efficiency and profitability.

Optimal Maintenance Points

Integrated Electronic Control System, High-efficiency Troubleshooting

Standard multi-functional OBC (integrated charging, discharging and power management) and Yuchai RFCS real-time feedback control system can monitor equipment operation status in real time. Fault codes accurately locate the root cause of problems, reducing the time and technical threshold of manual troubleshooting.

09 Arm holding valve

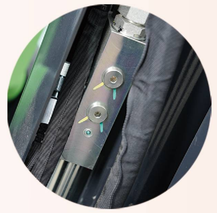

08 Boom holding valve

04 Boom and Arm Holding Valves

Even in the event of accidental hydraulic line failure, these valves prevent uncontrolled descent of the boom /arm, providing critical fail-safe protection for the machine.

The Y60E electric excavator features an Intelligent Power Module (IPM) with automatic fault diagnosis and alert capabilities.

Intelligent Power Module (IPM)

02 Power Management Module

03 Rear camera (optional)

04 Coolant

05 Hydraulic Tank Breather

06 grease lubrication point

07 radiator

Equipment

- Standards and requirements for special equipment vary by country.
- For more details on equipment options, please feel free to contact us.

Component Part	Description	Standard	Optional
Cabin	LCD instrument	•	
	AM/FM Radio with bluetooth	•	
	Cup holder	•	
	High-back suspension seat	•	
	Air conditioning	•	
	FOPS		•
	TOPS	•	
	Front wipers	•	
	Rearview mirrors	•	
	Wireless charging	•	
	Rear camera	•	
	Cigarette lighter	•	
Working device	Steering head	•	
	Quick connector for AUX. pipes		•
	Hydraulic quick coupler pipes	•	
	Hydraulic quick coupler		•
	Tilting coupler		•
	Tilt rotator		•
	400mm Bucket		•
	700mm Bucket	•	
	1200mm Bucket		•
	1,635mm Arm	•	
	1,885mm Arm		•
	Hammer lines	•	
	Hydraulic hammer		•
	Auger		•
	Thumb		•
	Dozer blade	•	
	Dozer & Boom cylinder protection plate	•	
	Boom holding valve	•	
	Arm holding valve	•	
Tracks	400mm Rubber track	•	
	400mm steel track		•
Hydraulic system	Traveling alarm		•
	Dual electric proportional control joystick	•	
	Load sensing hydraulic system	•	
	ISO/SAE switch	•	
	AUX1	•	
	AUX2	•	
	AUX1 Adjustable pressure	•	
	AUX1 & AUX2 Adjustable flow	•	
	Dozer blade float	•	
Lighting	2 LED work lights at the front	•	
	1 Rear LED work light	•	
	1 boom LED work light	•	
	Beacon on the cabin	•	
Others	Extra counterweight		•

Y60E Max. digging radius-6190 mm (without quick coupler)

Standard Arm's Digging Force: 26 kN (market-leading performance)

- **Dual-arm versatility:** Standard/extended arm can meet the needs of different working conditions.
- **Key specs:** 0.18 m^3 bucket | 9.4 rpm swing | 45 kN bucket digging force.
- **Robust construction:** The heavy-duty machine structure, engineered for China's demanding applications, handles North American and European job sites with ease.

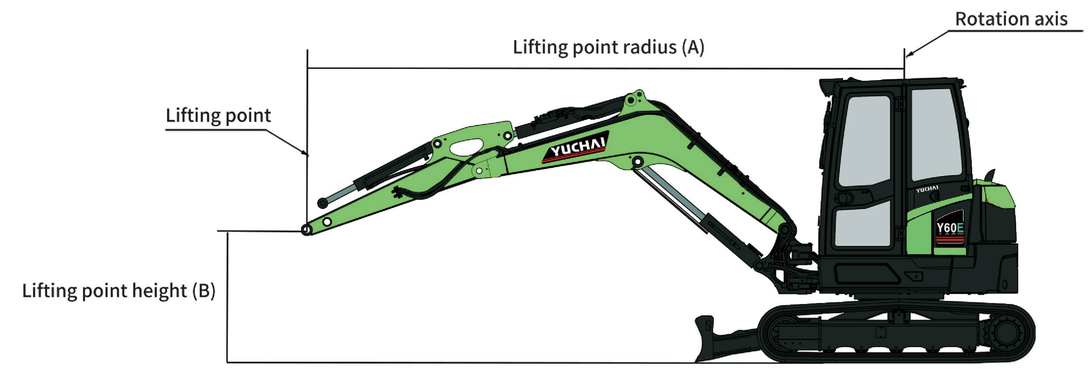

Standard arm, standard counterweight(C=kg)											
A	2.0 m		3.0 m		4.0 m		5.0 m		Maximum Arm Reach Lifting Capacity		
B											
5.0 m	—	—	—	—	—	—	—	—	—	—	—
4.0 m	—	—	—	—	*1275	609	—	—	*1222	542	—
3.0 m	—	—	—	—	*1302	604	—	—	*1135	426	—
2.0 m	—	—	*1996	884	*1512	576	*1306	408	*1139	377	—
1.0 m	—	—	*2647	800	*1755	542	*1378	394	*1211	359	—
0 m	—	—	*2831	758	*1873	516	*1379	383	*1310	368	—
-1.0 m	*2703	*1412	*2593	750	*1756	508	—	—	*1310	412	—
-2.0m	*2969	*1450	*1922	767	—	—	—	—	*1230	542	—
-3.0m	—	—	—	—	—	—	—	—	—	—	—
-4.0m	0*	0*	0*	0*	0*	0*	0*	—	—	—	—

Explain

The data contained in these tables represent the lifting capacity in accordance with ISO standard 10567. They don’t include the weight of the bucket and correspond to 75% of the maximum static tipping load or 87% of the hydraulic lifting power. Data marked * are the hydraulic limits of the lifting power.