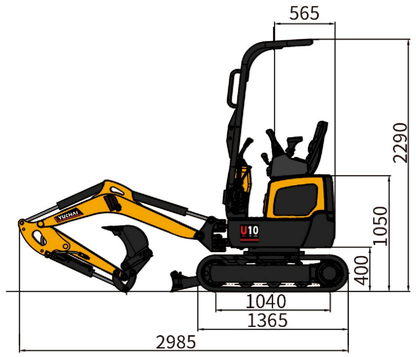

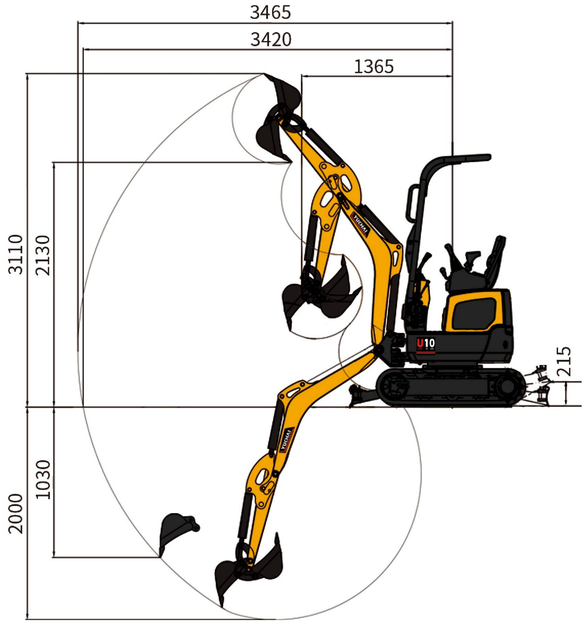

U10 Technical Specification

Basic parameters	
Machine weight	1050 kg
Bucket capacity	0.02~0.026 m^3
Width of bucket	356 mm
Performance parameters	
Engine model	Kubota D722
Emission Standard	Euro V / EPA Tier 4F / CN IV
Engine power	10.2kW / 2500 rpm
Max. Gradeability	30 °
Max. digging force of arm	5.4 kN
Max. digging force of bucket	10.4 kN
Traveling speed	3.0/1.5 km/h
Max. hauling force	22.5 kN
Slewing speed of platform	7.5~8.5 rpm
Operating parameters	
Max. digging height	3110 mm
Max. digging depth	2000 mm
Max. digging radius	3465 mm
Max. digging radius on ground level	3420 mm
Max. dumping height	2130 mm
Min. slewing radius	1365 mm
Max. vertical digging depth	1030 mm
Transportation dimensions	
Overall length	2985 mm
Overall width	750 mm
Overall height	2290 mm
Other Parameters	
Width of undercarriage	750mm / 990 mm
Length of track	1365 mm
Width of track	180 mm
Minimum ground clearance	155 mm
Height between platform and ground	400 mm
Platform tail turning radius	565 mm
Length to center of rollers	1040 mm
Fuel tank capacity	11 L
Hydraulic oil tank capacity	12 L
Track gauge	570/810 mm
Working Pressure	P1=P2=17.2MPa
Flow rate	P1=P2=10.5 L/Min
AUX 1 Pressure/ Flow rate	17.2 MPa/21 L/Min
Arm length	900 mm
Boom length	1450 mm
Max. lifting height of the dozer blade	215 mm
Steering head angle	55°(L)/55°(R)

*Specifications are subject to change without prior notice .

MINI EXCAVATOR

GUANGXI YUCHAI EQUIPMENT TECHNOLOGY CO. , LTD.
Address: Yuchai Engineering Machinery Industry Center, Luchuan, Guangxi,China
Email: dig@yuchai.cn,ychi-export@yuchai.cn | Website: www.yuchaicm.com
Tel: +86-775-3223503 | Fax: +86-775-3223503

Facebook

Machine weight : 1050 kg | Engine model : Kubota D722
Emission Standard Euro V / EPA Tier 4F | Engine power : 10.2 kW/2500 rpm
Overall dimensions (L x W x H): 2985mm x 750mm x 2290 mm

U10

Chinese Leading Professional Manufacturer of Compact Size equipment

As the builder of China's first mini excavator (Model WY-4, 1990), Yuchai leverages 37+ years of specialized expertise to present the revolutionary U10 mini excavator - delivering efficient, multi -functional performance for diverse job sites.

This powerhouse mini excavator delivers exceptional capabilities that surpass expectations – whether you're new to Yuchai or a longtime partner – redefining operational excellence on every jobsite.

YUCHAI

Yuchai U10 Mini-Excavator

The machine features a compact zero-tail swing, body (machine width: 750mm) suitable for narrow spaces, equipped with a Kubota Euro V and Tier4F engine to meet global environmental standards. Meticulously engineered by Yuchai's hydraulic design team, the dual-pump fixed- displacement throttling system features stable operation performance, excellent coordination of compound movements, reliable structure and stable power output, which can meet the requirements of both construction and landscaping applications.

Compact Design, Superior Performance

- The U10 mini excavator is powered by a Japanese-engineered Kubota D722 engine, complying with the strictest Euro V and EPA T4F emission standards.
- Exceptional reliability with superior fuel efficiency.
- Substantial low-speed torque delivery for digging and heavy lifting operations.
- The Super Glow System shortens the preheating time, enablingthe engine to start quickly even in cold weather and improving the equipment availability.
- Globally established service network ensuring readily availablespare parts.

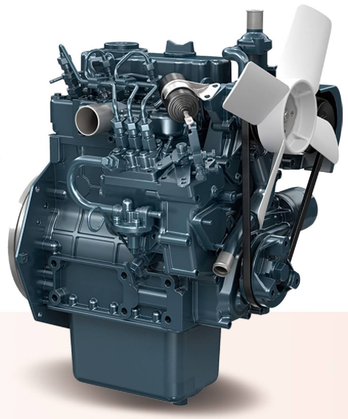

The U10 is more than a conventional mini excavator—its exceptional productivity will boost your bottom line.
Discover its technical features now and contact us to unlock further advantages.

High-Reliability Structure

Upgraded cast steel steering head boasts a lifespan of 8,000-10,000 hours,three times longer than welded counterparts.

U10 comes standard with 3 auxiliary hydraulic circuits, enabling quick-connect compatibility with a range of attachments such as buckets, hydraulic breaker, augers, thumb grapples.

The forced-air cooling system, equipped with a 6-blade fan, a large-capacity radiator and double rows of air outlets, boasting strong heat dissipation performance, effectively prevent the machine from overheating and ensure its stable operation.

Adopts an internal-meshing large-diameter slewing bearing, which boasts excellent durability and operational stability.

Equipped with a high-torque travel motor and has excellent climbing capability.

Intelligent Pilot Hydraulic System

With soft and coordinated composite movements (boom/arm/bucket/travel), precise micro-control down to millimeter level.

The dual-pump fixed- displacement throttling system, continuously delivers hydraulic oil at a fixed displacement. Combined with flow regulation via a throttle valve, it can provide a consistent and stable power supply for the machine, reduce additional wear on the equipment' s mechanical components caused by power fluctuations, extend the overall service lift of the machine.

Distributor

Pump

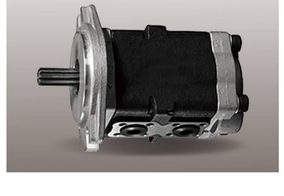

Traveling motor

Slewing motor

Outstanding Hydraulic Design

| Operating pressure of 17.5 Mpa with max.
| Flow rate of 21 L/min.
| Key specs: 0.026 m^3 bucket capacity.
| 7.5~8.5 rpm swing .
| 10.4 kN bucket digging force.

Compact Dimensions

Space-optimized design for operation in confined spaces.

Transportable via standard light-duty trailers across Europe.

International safety certified protection frame

Dual entrances paired with pilot control joysticks for comfortable operation

- Incorporates 36 years of European users' feedback to optimize Seat Index Point (SIP) positioning, delivering superior seating comfort.
- The ergonomically designed bilateral armrests significantly reduce hand fatigue during prolonged operation.

1 Equipped with a Tip-over Protective Structure (TOPS) frame, it actively creates a safe protective space for the driver when facing tip-over risks.

2 The dual-servo control lever features high operational precision, delicate operational feedback and rapid motion response, which significantly improves work efficiency.

3 **Left and right armrests:** Adjustable armrests with ergonomic design to ensure operator comfort during long hours of operation.

Concise user interface

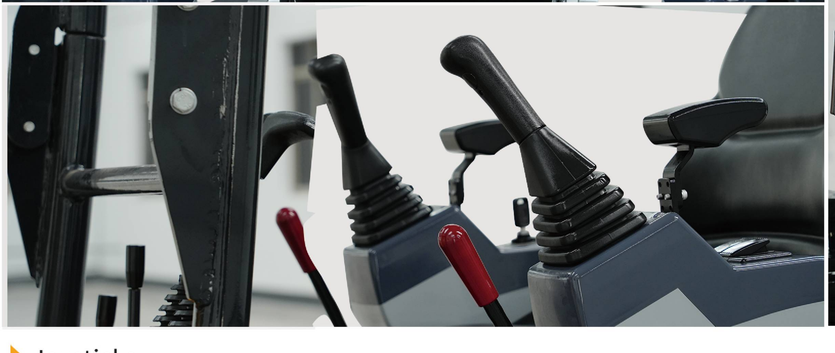

Joysticks

Comfortable foot space

Simple and Convenient Maintenance

- Opening bonnet design optimum arrangement of internal parts for quick and efficient service and shorter downtime.
- Metal covers are stronger and easier to repair.

High Cost-Performance

- The U10 mini excavator delivers exceptional cost-performance. With its heavy-duty structure, powerful engine, and versatile capabilities, the U10 maximizes your investment return.
- Its efficient and reliable performance enables you to complete construction and excavation projects with the lowest operating costs and highest productivity. More than just a purchase, the U10 is a long-term investment in your operational efficiency and profitability.

Optimal Maintenance Points

- The U10 mini excavator's centralized maintenance points enable quick and efficient maintenance, maximizing uptime and minimizing maintenance

06 Detachable protection frame

- Modular integrated design with only four bolts for fastening — no cutting or welding required during the entire disassembly and assembly process. The protection frame can be removed and reinstalled in just 7 minutes, improving efficiency by 70%.

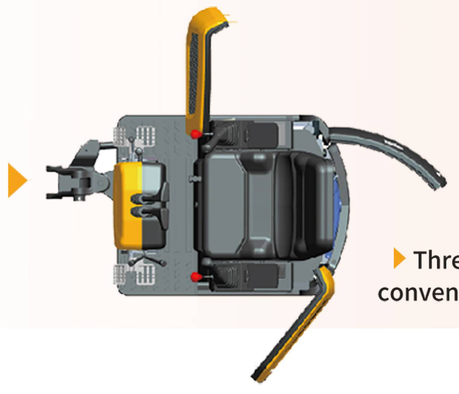

- Three-door design for convenient maintenance

01 Fuel filler port

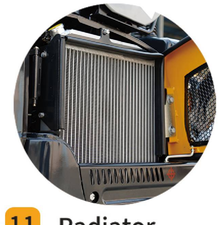

11 Radiator

02 Oil filter

03 Coolant

04 Air filter

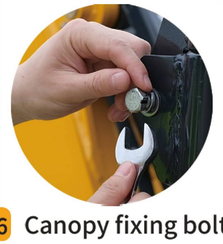

06 Canopy fixing bolts

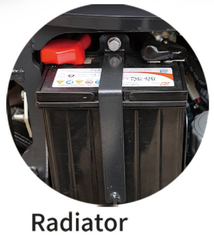

07 Radiator

08 Hydraulic oil gauge

09 Coolant

10 Hydraulic filler port

Equipment

- Standards and requirements for special equipment vary by country.
- For more details on equipment options, please feel free to contact us.

Component Part	Description	Standard	Optional
Protecting Frame	TOPS	•	
Working device	Hydraulic quick connnector		•
	250 mm bucket		•
	356 mm bucket		•
	800 mm bucket		•
	900 mm standard arm		•
	Hammer lines		•
	Hydraulic hammer		•
	Auger		•
	Thumb		•
Under Chassis	180 mm rubber track	•	
	180 mm steel track		•
	Telescopic chassis	•	
Hydraulic system	Traveling alarm		•
	ISO/SAE switch		•
	AUX1	•	
Lighting	1 boom LED work light	•	
Others	Extra counter-weight		•

U10 Max. digging radius-3465 mm (without quick coupler)

Standard Arm's Digging Force: 5.4 kN (market-leading performance)

- **Dual-arm versatility:** Standard/extended arm can meet the needs of different working conditions.
- **Key specs:** 0.026m³ bucket | 7.5~8.5 rpm swing | 10.4kN bucket digging force.
- **Robust construction:** The heavy-duty machine structure, engineered for China's demanding applications, handles North American and European job sites with ease.

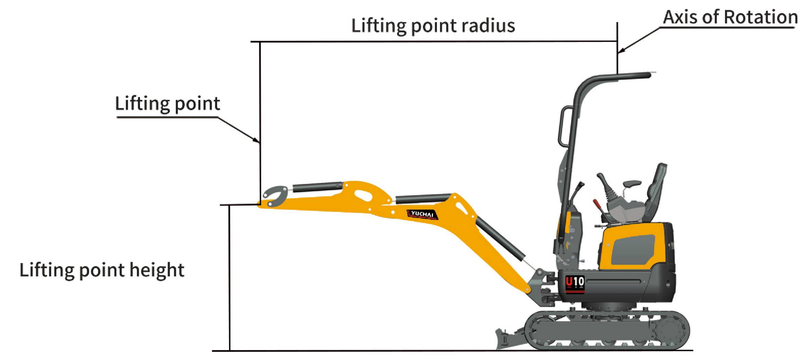

U10 Lifting Capacity Form						kN (ton)					
Lift	Lifting point radius (1.5 m)			Lifting point radius (2 m)			Lifting point radius (max.)			—	
Point	Over-front		Over-side	Over-front		Over-side	Over-front		Over-side	—	
Height	Blade Down	Blade Up		Blade Down	Blade Up		Blade Down	Blade Up	—	—	
2.0 m	—	—	—	1.8(0.18)	1.8(0.18)	1.6(0.16)	—	—	—		
1.0 m	3.0(0.30)	2.7(0.27)	2.3(0.23)	2.3(0.23)	1.8(0.18)	1.5(0.15)	—	—	—		
0.5 m	4.2(0.42)	2.5(0.25)	2.1(0.21)	2.7(0.27)	1.7(0.17)	1.4(0.14)	1.5(0.15)	0.9(0.09)	0.8(0.08)		
0 m	4.0(0.40)	2.3(0.23)	2.0(0.20)	2.5(0.25)	1.6(0.16)	1.3(0.13)	—	—	—		
-1.0 m	2.5(0.25)	2.3(0.23)	2.0(0.20)	1.7(0.17)	1.5(0.15)	1.3(0.13)	—	—	—		

Explain

The data contained in these tables represent the lifting capacity in accordance with ISO standard 10567. They don' t include the weight of the bucket and correspond to 75% of the maximum static tipping load or 87% of the hydraulic lifting power.
Data marked * are the hydraulic limits of the lifting power.