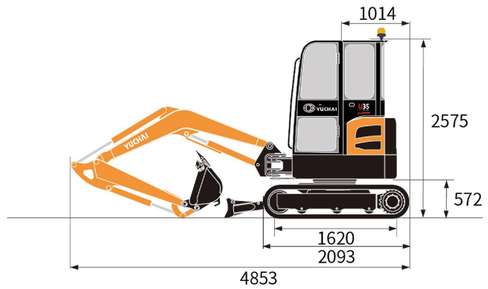

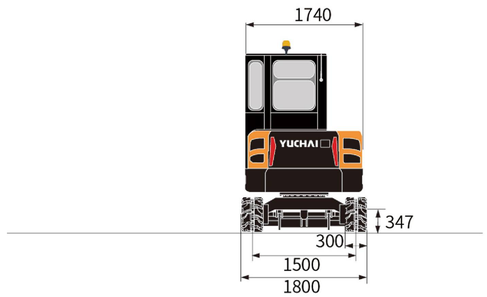

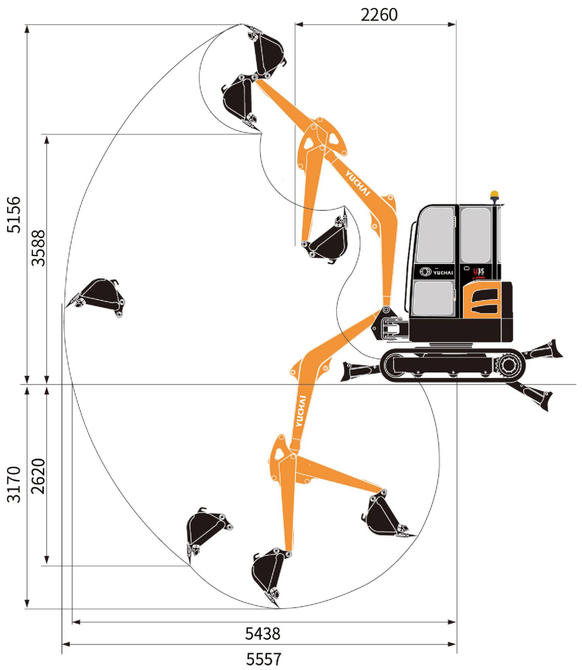

U35 Technical Specification

Basic parameters	
Machine weight	3860kg
Bucket capacity	0.12m³
Width of bucket	550mm
Performance parameters	
Engine model	Yanmar 3TNV88 | Yanmar 3TNV88F
Emission Standard	CN Ⅲ | Euro V / EPA Tier 4F
Engine power	20.4kW/2200rpm | 18.2kW/2200rpm
Max. Gradeability	35 °
Max. digging force of arm	25.78 kN
Max. digging force of bucket	32.67 kN
Traveling speed	3.1/4.8 km/h
Max. hauling force	29 kN
Slewing speed of platform	11~13 rpm
Operating parameters	**Standard / longer arm**
Max. digging height	5156mm / 5273mm
Max. digging depth	3170mm / 3398mm
Max. digging radius	5557mm / 5703mm
Max. digging radius on ground level	5438mm / 5584mm
Max. dumping height	3588mm/3698mm
Min. slewing radius	2260mm/2287mm
Max. vertical digging depth	2620mm/2792mm/
Transportation dimensions	
Overall length	4853mm/4863mm
Overall width	1800 mm
Overall height	2575 mm
Other parameters	
Width of undercarriage	1800 mm
Length of track	2093 mm
Width of track	300 mm
Minimum ground clearance	347 mm
Height between platform and ground	572 mm
Platform tail turning radius	1014 mm
Length to center of rollers	1620 mm
Fuel tank capacity	52 L
Hydraulic oil tank capacity	40 L
Track gauge	1500 mm
Working Pressure	24 Mpa
Flow rate	90 L/Min
AUX1 Pressure/ Flow rate	28 Mpa/65 L/Min
AUX2 Pressure/ Flow rate	28 Mpa/50 L/Min
Arm length (standard /longer)	1400mm /1550 mm
Boom length	2500 mm
Steering head angle	65.5°(L)/53.7° (R)

Specifications are subject to change without prior notice .

MINI EXCAVATOR

GUANGXI YUCHAI EQUIPMENT TECHNOLOGY CO. , LTD.
Address: Yuchai Engineering Machinery Industry Center, Luchuan, Guangxi,China
Email: dig@yuchai.com,ychi-export@yuchai.com | Website: www.yuchaicm.com
Tel: +86-775-3223503 | Fax: +86-775-3223503

Facebook

Machine weight : 3860 kg | Engine model : Yanmar 3TNV88 | Yanmar 3TNV88F
Bucket capacity: 0.12 m³ | Engine power : 20.4kW/2200rpm | 18.2kW/2200rpm
Overall dimensions (L x W x H): 4853mm x 1800mm x 2575 mm

U35

Yuchai – Pioneering Compact Construction Solutions

Yuchai, the manufacturer of China's first mini excavator (Model: WY 4, 1990) and a professional producer of compact construction equipment, brings you the all-new Yuchai U35 mini excavator.

This powerhouse mini excavator delivers exceptional capabilities that surpass expectations – whether you're new to Yuchai or a longtime partner – redefining operational excellence on every jobsite.

YUCHAI

Yuchai U35 Mini-Excavator

The U35 is designed to be compact yet robust, powered by a Yanmar engine that meets the Euro V emission standard, delivering exceptional power performance. Meticulously engineered by Yuchai's hydraulic design team, the load-sensing hydraulic system ensures efficient, reliable, and smooth hydraulic movements even in demanding working conditions, making it ideal for both construction and landscaping applications.

World - Renowned Power System，Superior Performance

- Equipped with Yanmar 3TNV88 engine, supported by a global service network for worry - free after - sales support.
- Optional Euro 5 and EPA T4F engines meet global market requirements.
- Data proves its strength, new - generation energy - saving engine and intelligent power matching technology, enabling every drop of fuel to achieve optimal efficiency and reducing operation costs by 12%.
- Globally established service network ensuring readily available spare parts.

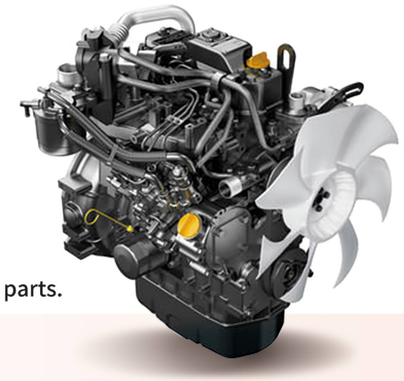

- The U35 is more than a conventional mini excavator—its exceptional productivity will boost your bottom line.
- Discover its technical features now and contact us to unlock further advantages.

1 Enhanced Cylinder Protection

First comprehensive cylinder guard system implemented on Yuchai excavators. Sliding protective plates shield boom, arm, and bucket cylinders from falling-object damage.

2 The premium version of U35 comes standard with two auxiliary hydraulic circuits, enabling quick-connect compatibility with a range of attachments such as buckets, hydraulic breakers, augers, and log grapples. Combined with the electronically proportional joysticks, operation becomes exceptionally smooth and effortless.

- Upgraded cast steel steering head boasts a lifespan of 8,000–10,000 hours, three times longer than welded counterparts.

Intelligent load-sensing hydraulic system, energy-saving, reliable, with precise operation and smooth movement.

- Operation efficiency is improved by 15%, with better fuel efficiency.

Outstanding Hydraulic Design

| Standard arm delivers 25.78 kN of digging force.
| Operating pressure of 24 Mpa with max.
| Flow rate of 90 L/min.
| Key specs: 0.12 m^3 bucket.
| 11~13 rpm swing .
| 32.67 kN bucket force.

Compact Dimensions

- Space-optimized design for operation in confined spaces.
- Transportable via standard light-duty trailers across Europe.

Premium Cab

Where safety meets comfort

Ergonomically Engineered Cab

- Incorporates 36 years of European users' feedback to optimize Seat Index Point (SIP) positioning, delivering superior seating comfort.
- The ergonomically designed bilateral armrests significantly reduce hand fatigue during prolonged operation.

1 The cab, equipped with a Tip-Over Protective Structure (TOPS) and Falling Object Protective Structure (FOPS), along with additional features such as a radio, an elastic fabric seat with a high backrest and headrest, a heater, and safety elements including seat belts and a safety hammer, offers multifaceted advantages, providing the operator with both comfort and safety.

2 The U35 offers both regular joysticks and proportional joysticks (for Premium model).

- The proportional joystick is with thumb roller operation, delivering intuitive and precise hydraulic control，enhancing operational efficiency by an additional 30%.

Dual-Mode Control for Flexible Switching

- Premium version of U35 designed with ISO/SAE modes adapts to global operation habits.
- Directly adjust AUX.1 and AUX.2 pressure via the dashboard for effortless operation（optional）.

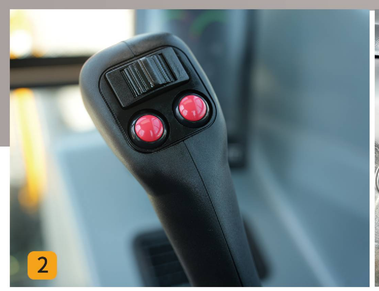

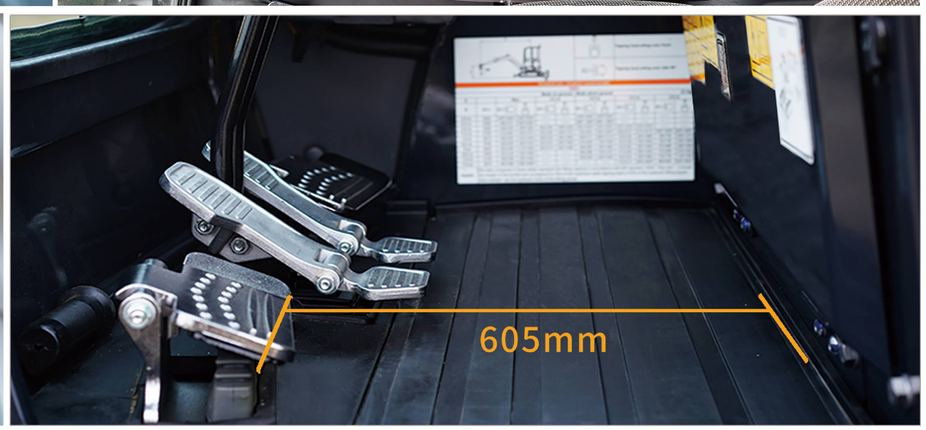

- LCD instrument
- Wide and comfortable foot space

- Spacious and comfortable cabin

Simple and Convenient Maintenance

- Opening bonnet design optimum arrangement of internal parts for quick and efficient service and a shorter downtime.
- Unique cab tilt design provides easy access to major components for simplified maintenance.

High Cost-Performance

- The U35 mini excavator delivers exceptional cost-performance. With its heavy-duty structure, powerful engine, and versatile capabilities, the U35 maximizes your investment return.
- Its efficient and reliable performance enables you to complete construction and excavation projects with the lowest operating costs and highest productivity. More than just a purchase, the U35 is a long-term investment in your operational efficiency and profitability.

Optimal Maintenance Points

- The U35 mini excavator's centralized maintenance points enable quick and efficient maintenance, maximizing uptime and minimizing maintenance.

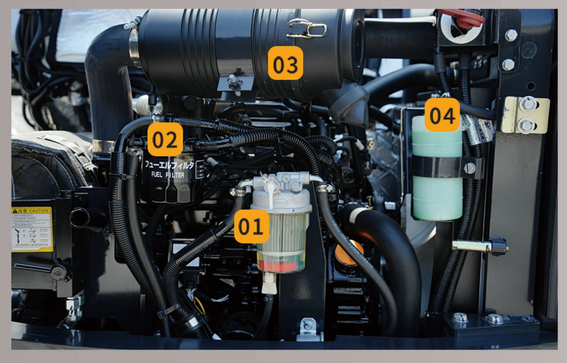

11 Hydraulic Quick Coupler Adapter

10 Boom Holding Valve (optional)

01 Oil filter

02 Fuel filter

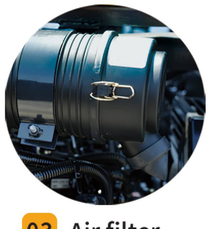

03 Air filter

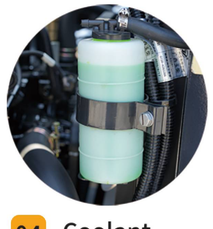

04 Coolant

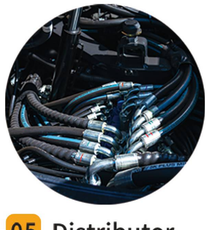

05 Distributor

06 Tank & radiator

07 Fuel Tank Filler Neck

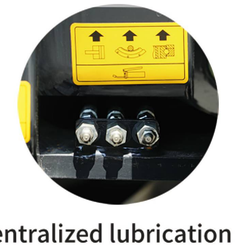

09 Centralized lubrication points

Equipment

- Standards and requirements for special equipment vary by country.
- For more details on equipment options, please feel free to contact us.

Component Part	Description	Standard	Optional
Cabin	LCD instrument	•	
	AM/FM Radio With USB Port	•	
	High-back suspension seat		•
	Air Conditioner	•	
	FOPS		•
	TOPS	•	
	Front Wipers	•	
	Rearview Mirror	•	
	Cigarette Lighter	•	
Working device	Steering head	•	
	Mechanical quick Coupler	•	
	Quick connector for AUX. pipes		•
	Hydraulic Quick Coupler Lines		•
	Hydraulic Quick Coupler		•
	Tilt Rotator		•
	300mm Bucket		•
	625mm Bucket	•	
	1,400mm Arm	•	
	1,550mm Arm		•
	1,700mm Arm		•
	Hammer lines	•	
	Hydraulic Hammer		•
	Auger		•
	Thumb		•
	Dozer blade	•	
	Dozer Cylinder and boom cylinder Protection Plate	•	
	Arm cylinder protection Plate		•
	Bucket cylinder protection Plate		•
	Boom holding valve		•
	Arm holding valve		•
Tracks	300mm Rubber Tracks	•	
	300mm Steel Tracks		•
Hydraulic system	Travel Alarm		•
	Dual Electric Proportional Control Joystick		•
	Load-Sensing Hydraulic System	•	
	ISO&SAE control switch		•
	AUX1	•	
	AUX2		•
	AUX1 Pressure Adjustable		•
	Attachment Pipe Flow Adjustable		•
Lighting	2 LED Work Lights at the Front	•	
	1 Rear LED Protection Light	•	
	1 Boom Work Light	•	
	Beacon on the canopy	•	
Others	Extra counterweight		•

U35 Max. digging radius-5557 mm (without quick coupler)

Standard Arm's Digging Force: 25.78 kN (market-leading performance)

- **Dual-arm versatility:** Standard/extended arm can meet the needs of different working conditions.
- **Key specs:** 0.12m³ bucket | 11~13rpm swing | 32.7kN bucket digging force.
- **Robust construction:** The heavy-duty machine structure, engineered for China's demanding applications, handles North American and European job sites with ease.

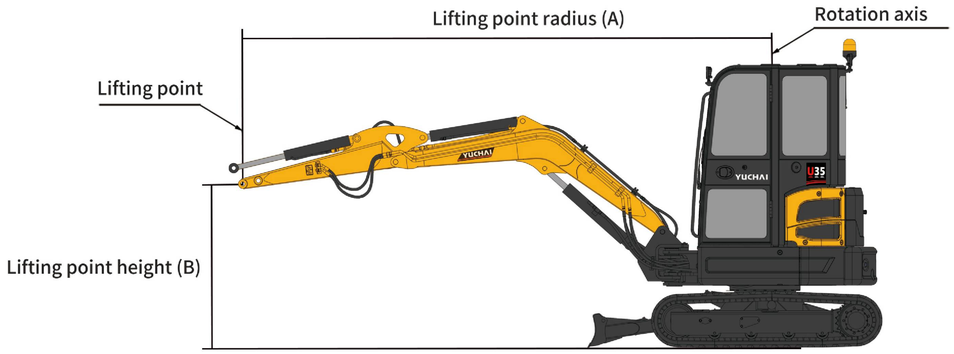

Standard arm, standard counterweight(C=kg)										
A	1.0 m		2.0 m		3.0 m		4.0 m		—	
B										
4.0 m	*0	*0	*0	*0	*0	*0	—	—	—	—
3.0 m	*0	*0	*0	*0	*0	*0	*1004	499	—	—
2.0 m	—	—	*0	*0	*1295	749	*1078	490	—	—
1.0 m	—	—	—	—	*1746	702	*1226	472	—	—
0 m	—	—	*1381	*1237	*1949	676	*1307	460	—	—
-1.0 m	*0	*0	*3052	*1251	*1812	675	*1174	461	—	—
-2.0 m	*0	*0	*1977	*1289	*1179	699	—	—	—	—
	—	—	—	—	—	—	—	—	—	—
	—	—	—	—	—	—	—	—	—	—
	—	—	—	—	—	—	—	—	—	—

Explanation

The data contained in these tables represent the lifting capacity in accordance with ISO standard 10567. They don' t include the weight of the bucket and correspond to 75% of the maximum static tipping load or 87% of the hydraulic lifting power.
Data marked * are the hydraulic limits of the lifting power.