WMD Industrial Technology（Xiamen) Co., Ltd.

维美德工业技术(厦门）有限公司

About us

WMD Industrial Technology (Xiamen) Co., Ltd. is a high-tech innovative company, integrating to design, R&D and manufacturing. We typically involve in hydraulic machine or equipment, WMD also has capability of design and develop the control system in independently, include MCU software and electrical hardware control module accordingly, providing professional customized services to customers.

WMD have two glittering produce- WMD form machine and high-quality power packs, our form machine has very good reputation with stable and high efficiency. Our power pack massively use on garbage stations and sanitation equipment.

Our hydraulic engineers looked at the specification and established to refurbished and designed a more efficient and ever-improving technology HPU system。

WMD are working with our customers to provide an uncompromised, cost-effective and sustainable solution, aim to continuously add value to our clients businesses, and build a strong relationship that last.

1. WMD Forming Technology
维美德工业----管端成型技术

WMD forming machine
管端成型机

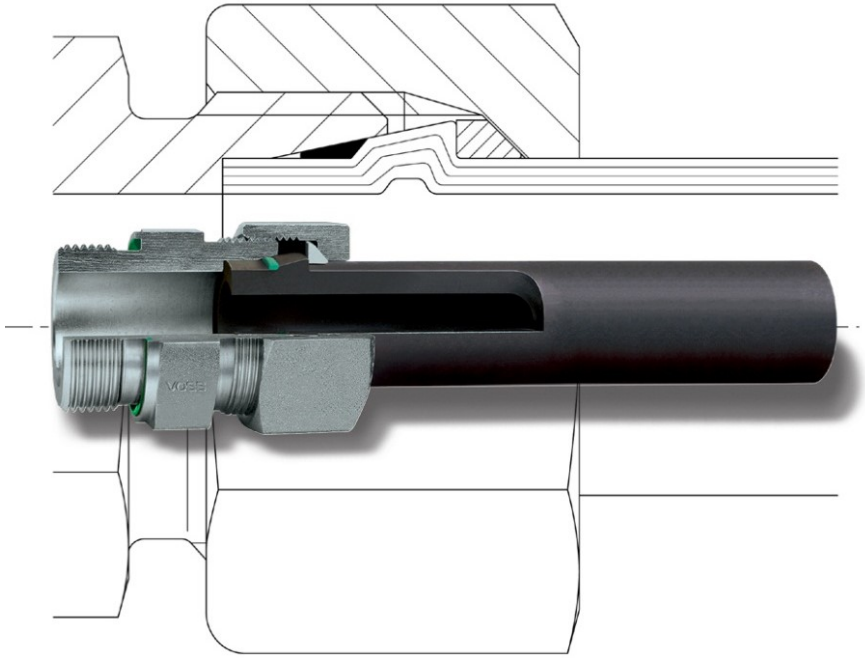

WMD forming tube connection solution

- Double seal-FKM seal slot and 24° conical surface seal created in same place
- Absorb vibration-C-type locked ring clamping pipe, absorb any vibration, avoid loose
- High efficiency- one time forging, no per-install, no welding, no need second process
- Economy-localization batch production, low cost.

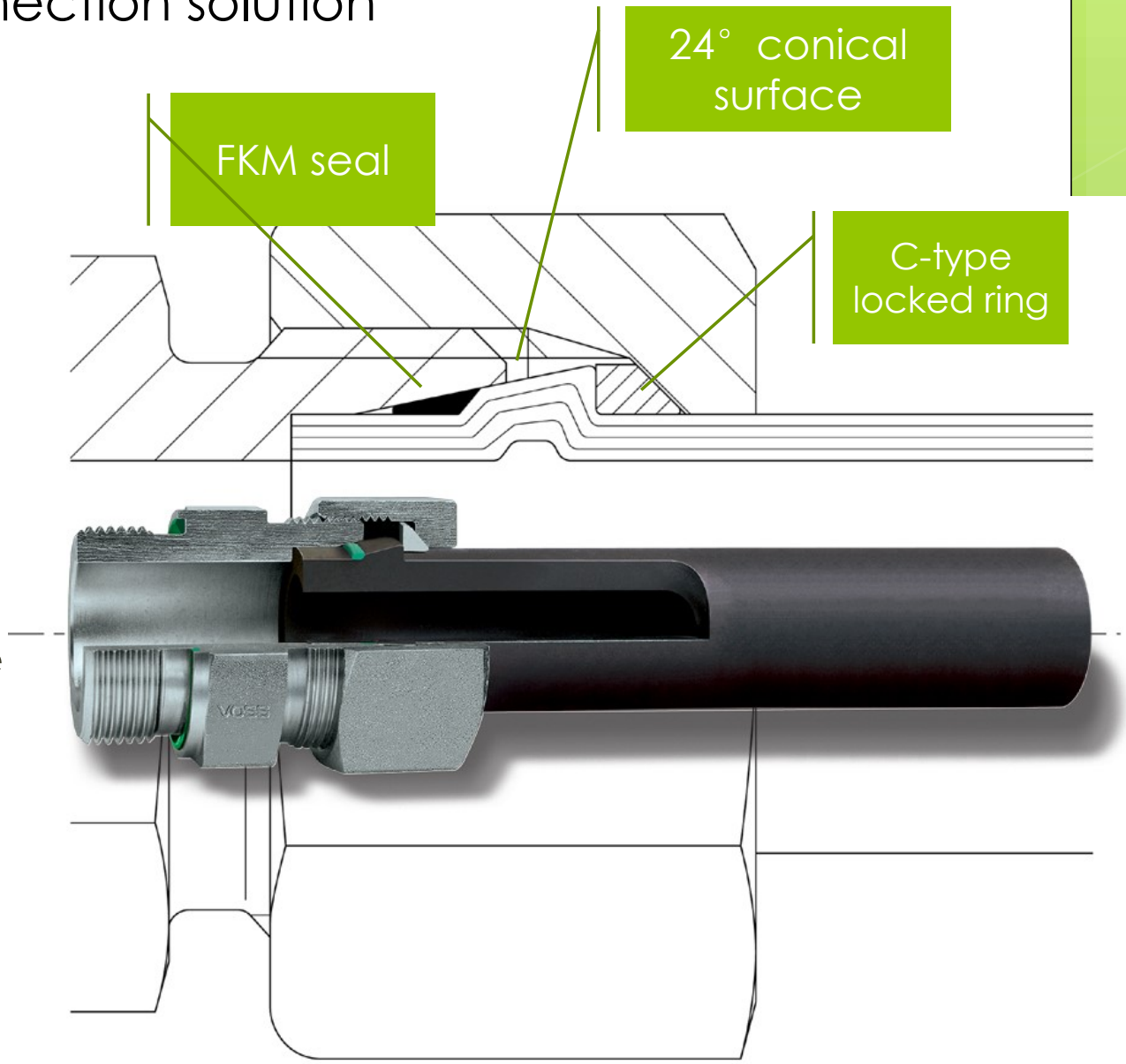

WMD forming tube connection solution

- Standard fittings
- Formed tube end
- FKM Seal ring
- Standard din nut with C-type Locked ring

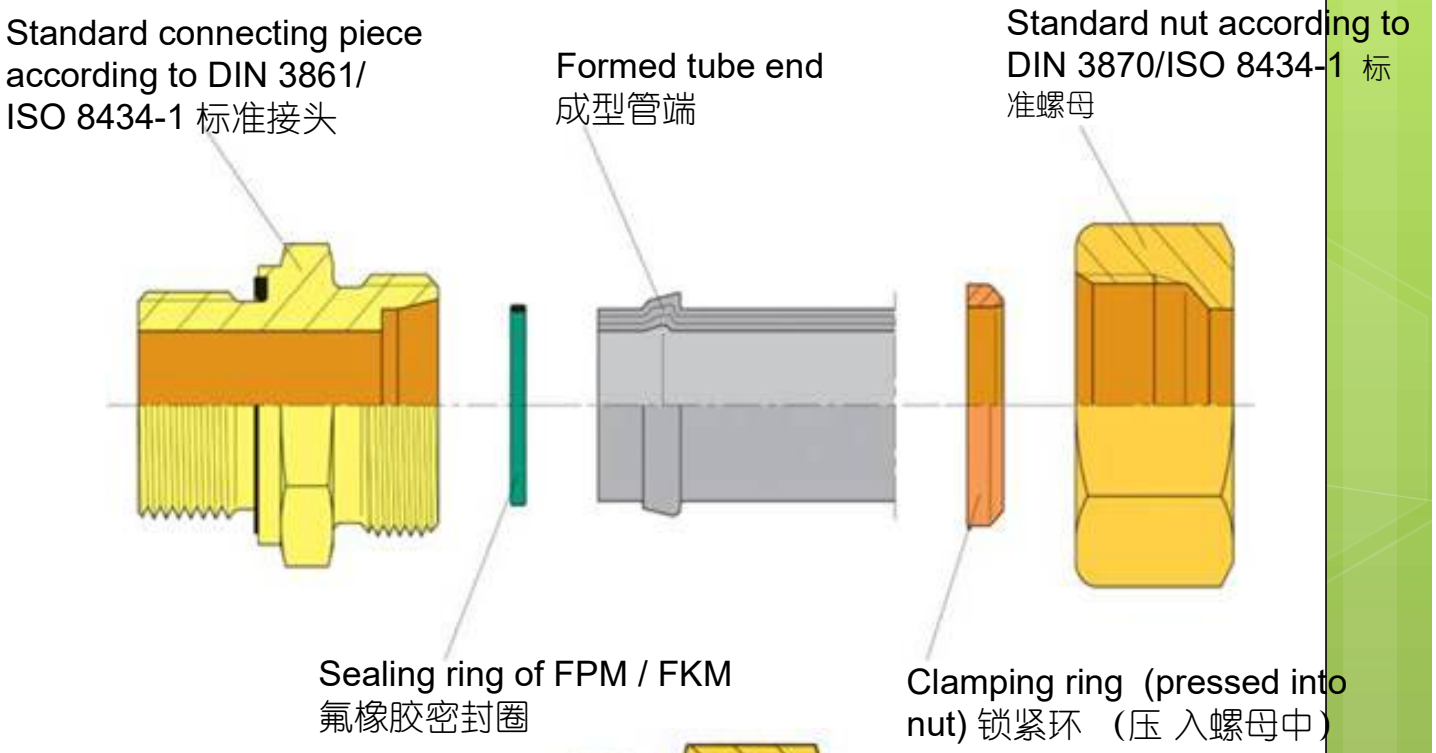

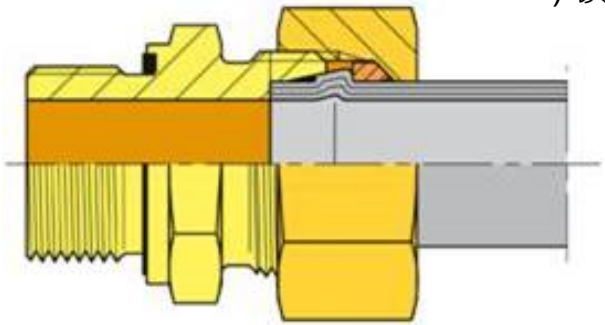

A simple & high reliable connection system created

WMD forming system -Absorption of dynamic loads

- All dynamic loads change to vertical pressure of tube, avoid damage of connection system
- Fixation of the tube with integrated c-type locked ring, reduced notch sensitivity

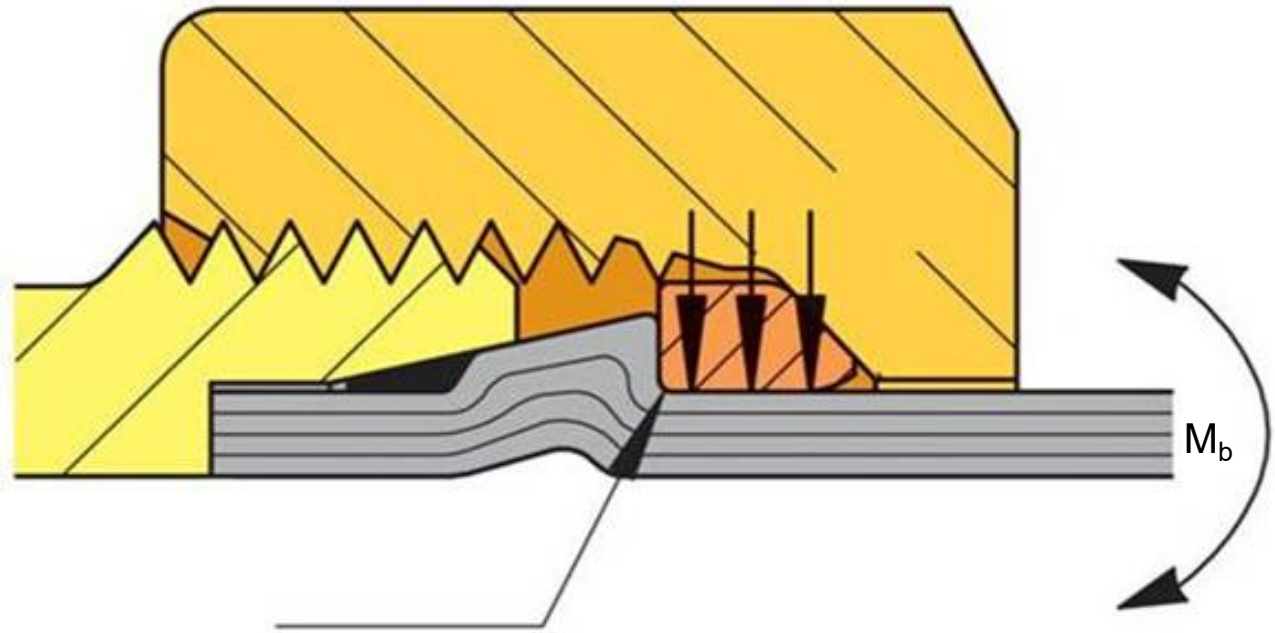

Absorption of dynamic loads
by integrated clamping ring
集中锁紧环吸收动态载荷

Comparison of features /特征与性能对比

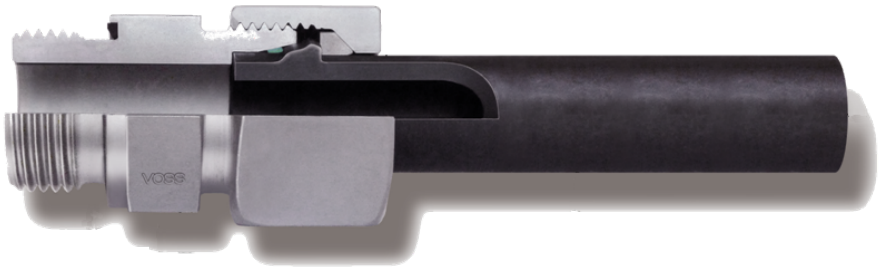

WMD

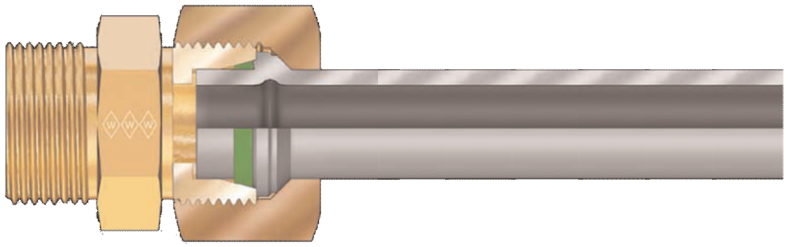

EATON

- Sealing concept 密封理念
- Tube fixing 管子固定
- Function of clamping ring 锁紧环功能
- Forming machine / process 成型机器及程序

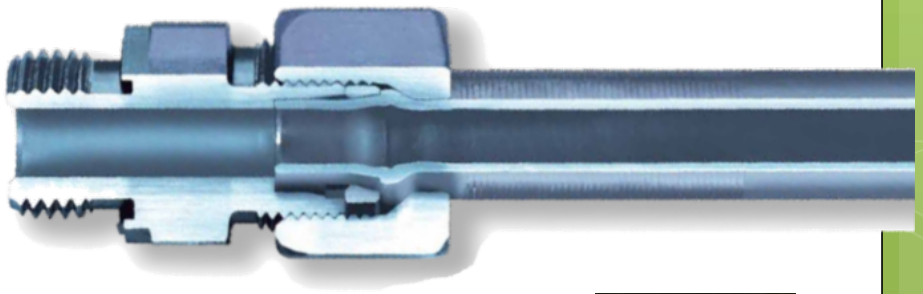

Parker

Sealing area in tube end stop position 管端密封区域

- Two quasi-static sealing concept 静密封，24度锥硬密封+软密封
- Primary static 24 conical metal surface seal 24度锥金属硬密封面为主密封
- FKM seal avoid seepage leakage 胶圈防止渗漏
- Absorbability of pressure shocks on soft-seal 吸收了软密封处的压力脉冲
- Gap extrusion of soft-seal inside the system excluded管端与接头底端无间隙
- 软密封不会通过间隙挤出

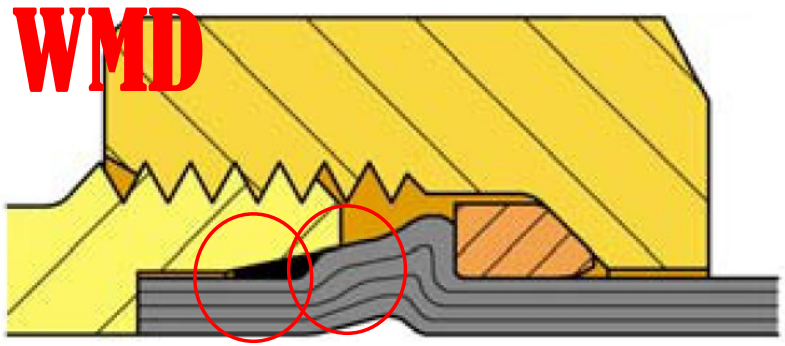

- Only soft-seal inside 仅有软密封
- Gap between tube and connecting piece ground 管端与接头底端有间隙
- Pressure shocks reach directly on soft-seal 压力脉冲直接作用于软密封处

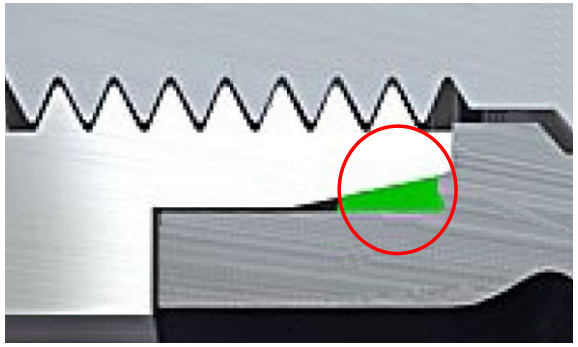

EATON

Parker

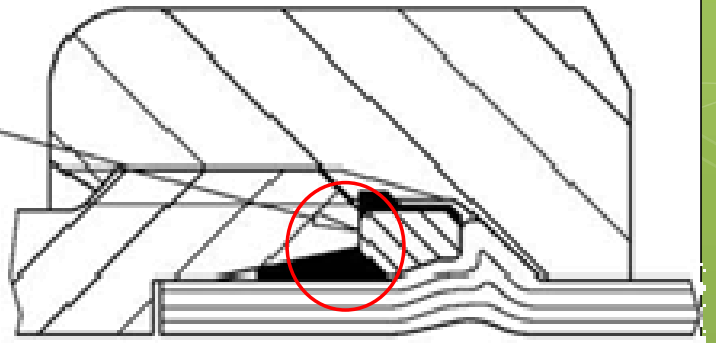

Pressure variations in the field of the elastomer

密封处的压力脉冲

WMD

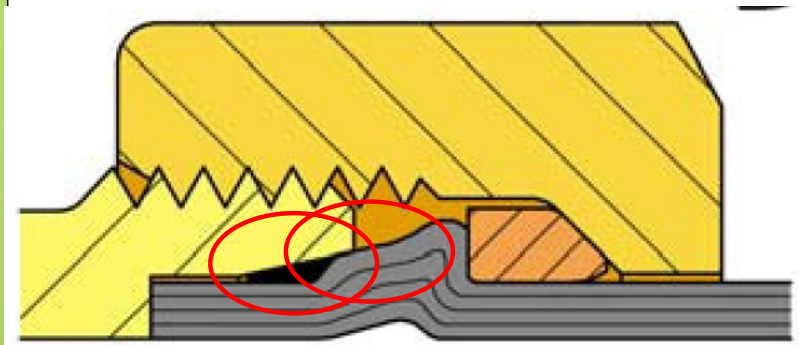

EATON

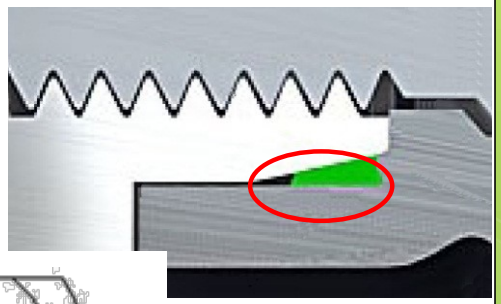

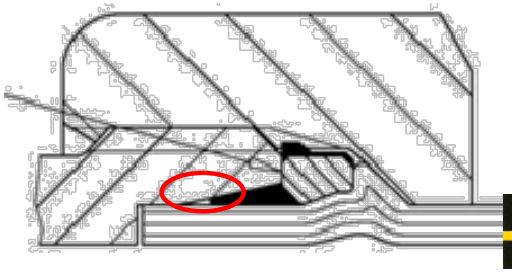

Parker

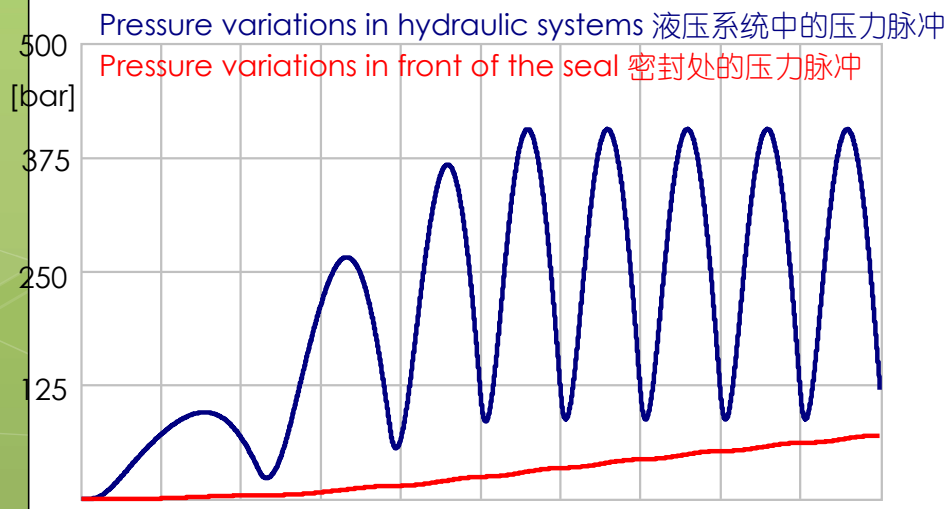

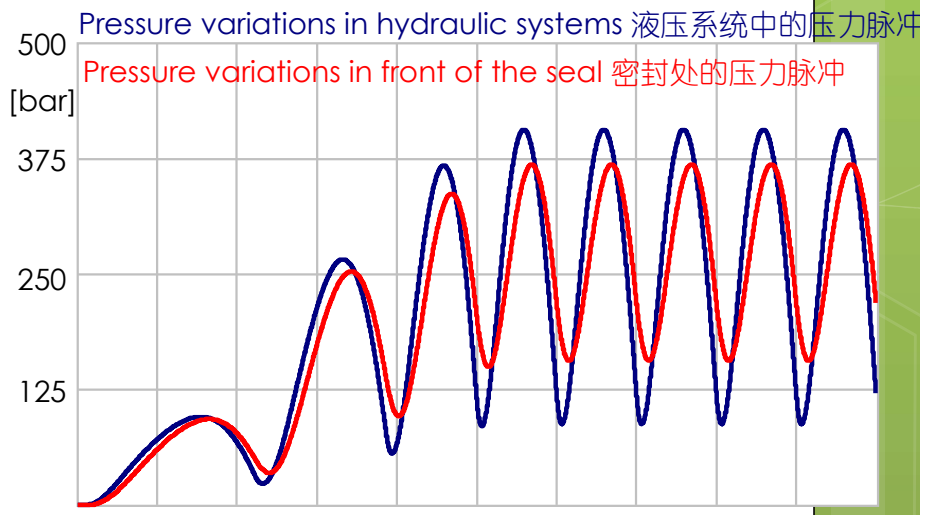

Surface pressure in the metallic-sealing area 金属密封区域的接触压力

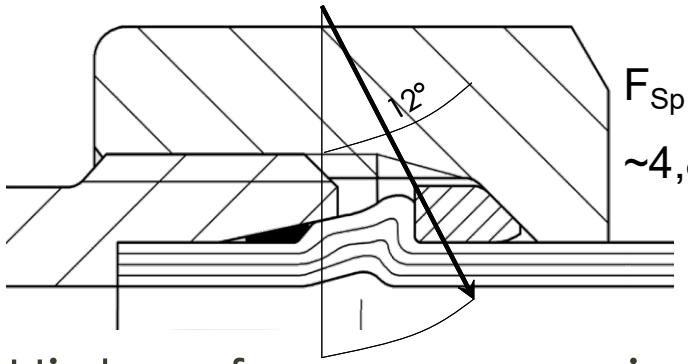

$F_{Sp} = F_m / \sin 12°$

$\sim 4{,}8\ F_m$

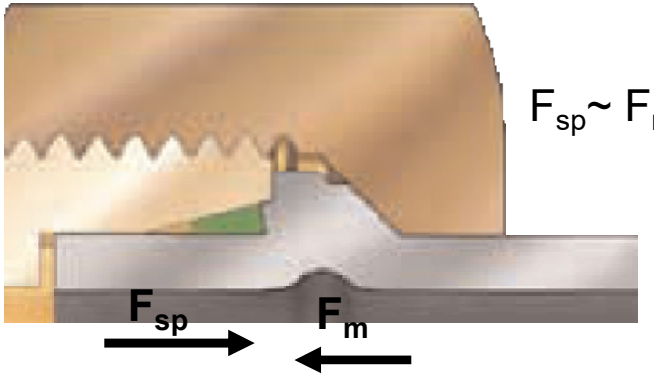

$F_{sp} \sim F_m$

- High surface pressure in the metallic-sealing area ~ 4,8 F_m 金属密封区域的接触压力高
- No rotating of the tube 管子不会跟转
- Compensation against settling phenomenon caused by tension of 24° cone 塑性变形补偿

- Low surface pressure in the metallic-sealing area $F_{sp} \sim F_m$ 金属密封区域接触压力低
- Because of the subsequently initiated contour modification (Walformplus) the problem of tube-rotation was going to be reduced WalForm 的接触面改进后降低了管子跟转问题

Fixing of tube in the coupling 在接头中固定钢管

WMD

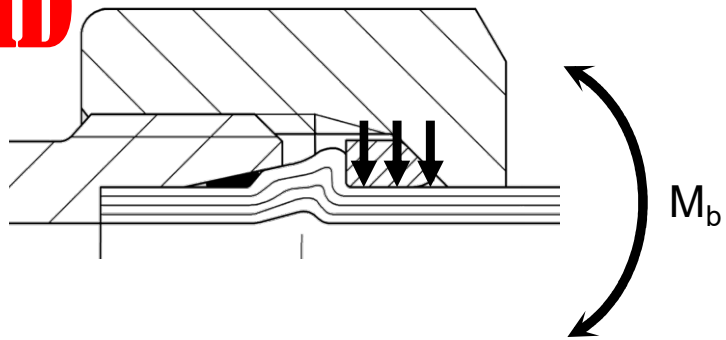

- Radial fixing because of slotted clamping ring 锁紧环径向锁紧钢管
- Absorption of bending fatigue stress in front of the formed section 在钢管变形处前段吸收弯曲应力
- Reduction of notch effect because of radius in the clamping ring 因锁紧环，降低了变形处的应力集中

EATON

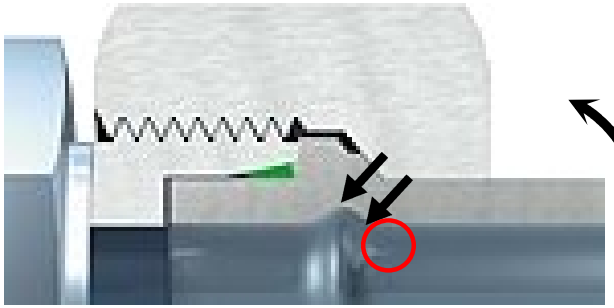

Parker

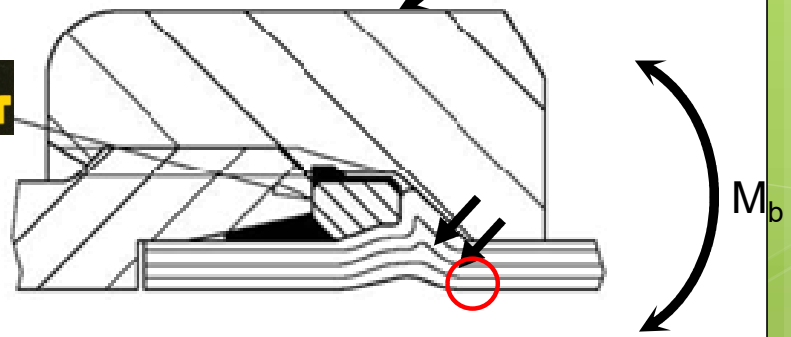

- Fixing at the bevel part of the contour 成型面锁紧钢管
- Bending fatigue stresses are stopped directly in the formed section 弯曲应力直接作用在钢管变形处
- Notch effect 应力集中在变形处

Comparison of bending fatigue strength
交变弯曲强度对比

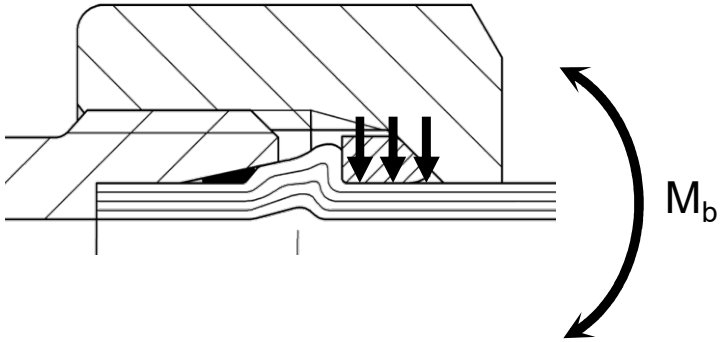

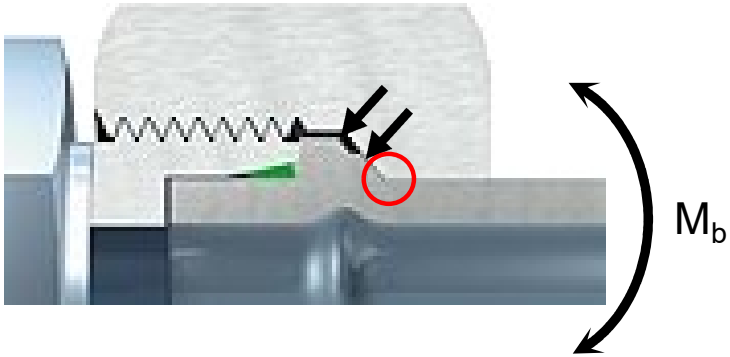

Size	WMD FORM 维美德成型	Walform 万特塞成型	Improvement to Walform 提高比例
L 18x2	130 N/mm²	110 N/mm²	18%
L 30x3	130 N/mm²	110 N/mm²	18%
S 38x5	140 N/mm²	100 N/mm²	40%
L 42x3	110 N/mm²	100 N/mm²	10%

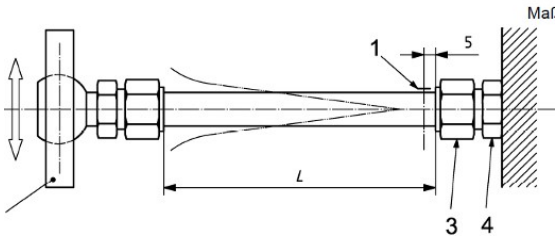

DIN EN ISO 19879

WMD FORM machine 管端成型机

- 一键成型，成型步骤自动完成 Automated process steps by light beam
- 成型完成自动退回插入位置，适合连续作业Automatically change from removal to insert position
- 具有手动或自动模式选择，更好适应作业工况 Manual or auto model
- 多档管子外径选择开关，对应最佳成型程序 Range selection of tube size for optimal forming process
- 更换模具夹具简单，不需要额外工具，半分钟换模Change of forming head and clamping jaws without additional tools
- 更短的成型时间 Short positioning times
  - 6-10 mm < 10 sec.
  - 12-22 mm < 15 sec.
  - 25-42 mm < 20 sec.

WMD FORM machine 管端成型机

- 远程协助，远程诊断，通过物联网技术，专业人员进行远程协助，远程设备诊断，提供高效服务。

Remote assistant, remote diagnose via IOT with high efficient service.

User-friendly design 操作简单

Improved ergonomics and user-friendliness by rearrangement of the operator keys
人体工程学按键设计，操作方便

Range of Tube Size selection 多档位管径选择，对应不同成型程序。

Manual or Auto model 手动/自动模式适应不同作业工况。

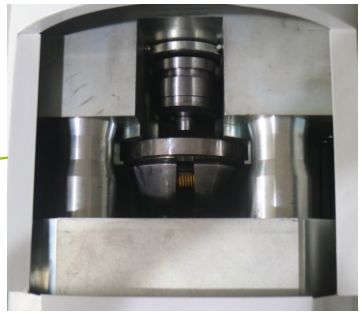

Changing head and jaws without tools

更换模具夹具不需要工具，半分钟换模

One Key power
一键电源开关

Castors with PU wheels for convenient transportation 滚轮方便运输

Comparison of installation-friendliness
设备简尺寸

- Complete machining centre
  BxHxT 700x900x1000

- Complete machining centre
  BxHxT 900x1122x943

- Tabletop unit – weight 220 kg
  No possibility for tool tray
  BxHxT 1000x260x850

Changing of forming tools 模具更换

WMD

Forming head (Changing without tools) 模具更换不需要工具

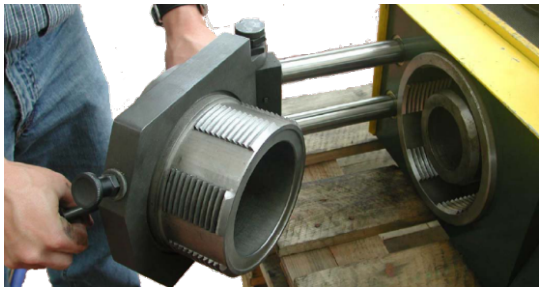

EATON

Forming head (Changing with tools) 模具更换需要工具

Clamping jaws (Changing without tools) 夹抓更换不需要工具

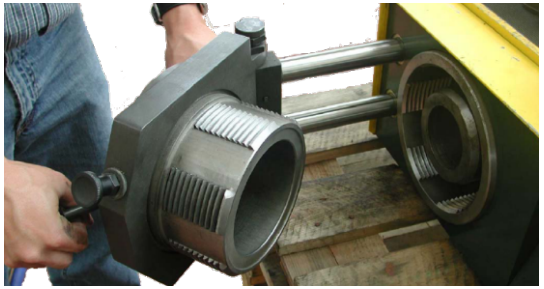

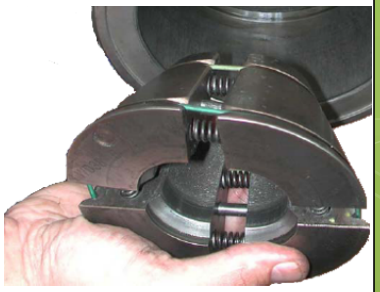

EATON

Clamping jaws (Changing with tools) 夹抓更换需要工具

Changing of forming tools 模具更换

WMD

Forming head (Changing without tools) 模具更换不需要工具

Forming head (Changing with tools) 模具更换需要工具

Clamping jaws (Changing without tools) 夹抓更换不需要工具

Clamping jaws (Changing with tools) 夹抓更换需要工具

Consequence of bad tube preparation

钢管成型缺陷风险

WMD

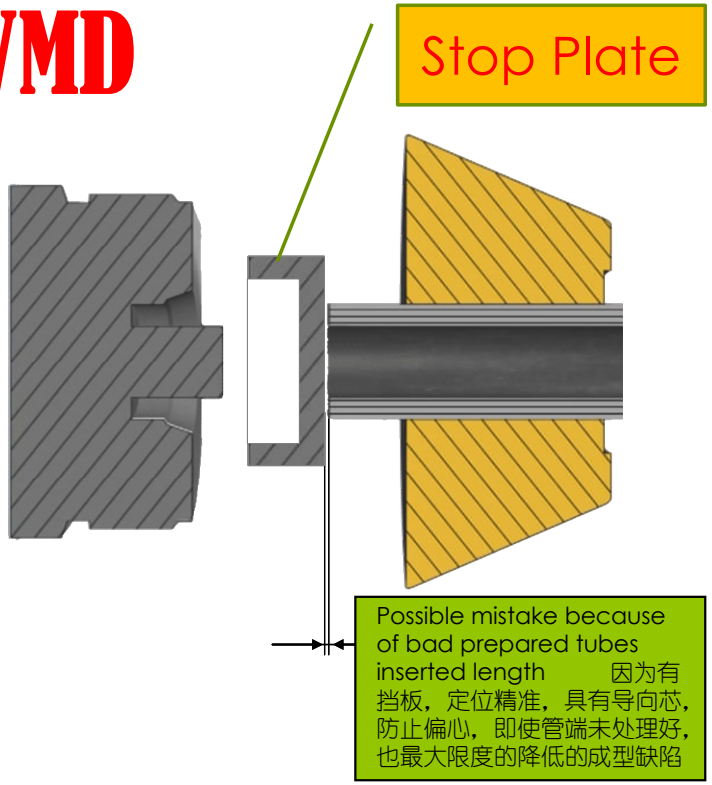

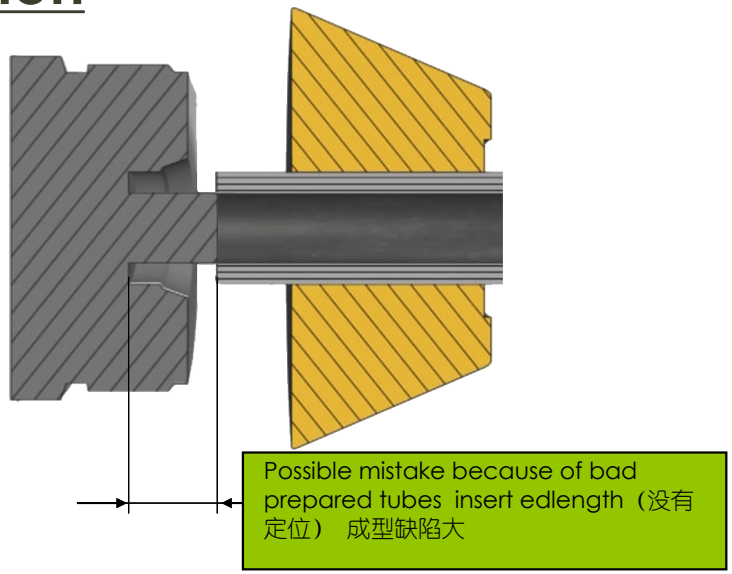

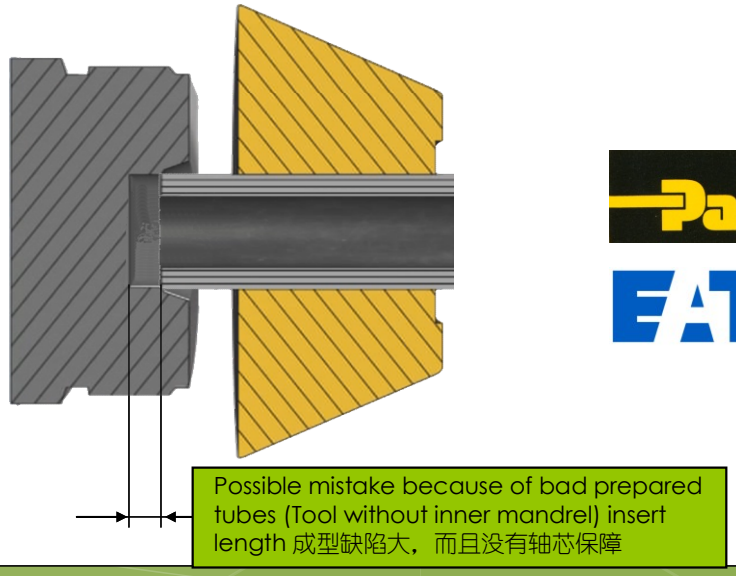

WMD: Minimization of mistake by stop plate and inner mandrel

维美德： 因挡板和导向芯，最大限度的降低了成型缺陷

Forming process 成型过程

- Defined insert position with stop plate 通过挡板确保钢管插入深度，定位准确
- Choice of optimal forming process 根据管子外径可选择最佳成型程序
- Manual or Auto model 具有手动和自动模式，更方便作业
- Forming process starts with a singular pushing of the start button，or waiting 2 second and go to next process. 按单个按钮完成成型过程，或自动模式下等待2秒，自动完成成型过程

- Insert position without stop plate 钢管插入位置无挡板定位
- Machine must be operated manually to reach the insert position before removing the part (two-hand operating) 机器先要手动推进到插入位置才能开始成型

Forming process成型过程

Defined insert position with stop plate通过挡板确保钢管插入深度，定位准确

Choice of optimal forming process 根据管子外径可选择最佳成型程序

Manual or Auto model 具有手动和自动模式，更方便作业

Forming process starts with a singular pushing of the start button，or waiting 2 second and go to next process. 按单个按钮完成成型过程，或自动模式下等待2秒，自动完成成型过程

- Start button has to be pressed during the whole forming process 在成型过程中，要始终按住开始按钮
- Only one position for insert and removal of the tube (lack of process reliability) 插入和成型都在一个位置（影响过程稳定性）

(By rotation of tube the forming head can become unscrewed 随着管子转动，模具会松动)

Broken comparison testing-With/Without FKM sealing ring
加与不加密封圈对比测试

- Tube type钢管型号:
- 25X2.5mm
- Fitting 接头：S25
- Pressure : 1011bar, Tube broking钢管爆裂
- Same result, with/without FKM seal ring 加与不加密封圈
- The connection system perfect 连接处密封零泄漏

Broken comparison testing-With/Without FKM sealing ring加与不加密封圈对比测试-without FKM seal

PRESSURE TEST CERIFICATE
测试报告

订单号 (Order No.)		维美德		试验日期 Test Date	2021-07-06
执行标准 Performance Standards		ISO4402		试样编号 Item No.	CYC20210628001
测试人 Tester		RIVER		型号规格 Model No. Specification	25S
试验压力（Bar） Pneumatic Test Pressure(bar)		无		保压时间（Min） Hydraulic Retention time(Min)	无
开始保压压力(Bar) Start Proof Pressure(Bar)	无	结束保压压力(Bar) End Proof Pressure（Bar）	无	爆破压力（Bar） Burst Pressure(Bar)	1011.6
开始时间 Start Time		19:01:40		结束时间 End Time	19:02:47
升压速率（Bar/min） Rate of Pressure Rise	905. 9	测试结论 Test Conclusion			

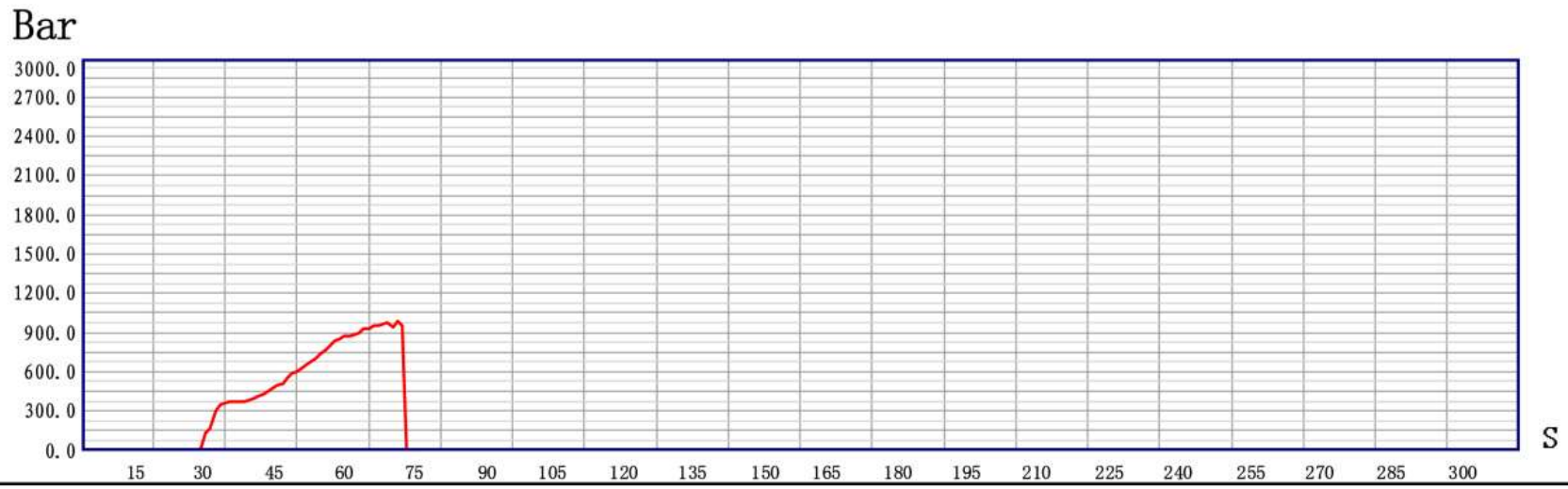

Broken comparison testing-With/Without FKM sealing ring加与不加密封圈对比测试-with FKM seal

PRESSURE TEST CERIFICATE
测试报告

订单号 (Order No.)		维美德		试验日期 Test Date	2021-07-06
执行标准 Performance Standards		ISO4402		试样编号 Item No.	CYC20210628001
测试人 Tester		RIVER		型号规格 Model No. Specification	25S
试验压力（Bar） Pneumatic Test Pressure(bar)		无		保压时间（Min） Hydraulic Retention time(Min)	无
开始保压压力(Bar) Start Proof Pressure(Bar)	无	结束保压压力(Bar) End Proof Pressure（Bar）	无	爆破压力（Bar） Burst Pressure(Bar)	1011.6
开始时间 Start Time		19:19:37		结束时间 End Time	19:20:58
升压速率（Bar/min） Rate of Pressure Rise	758. 7	测试结论 Test Conclusion			

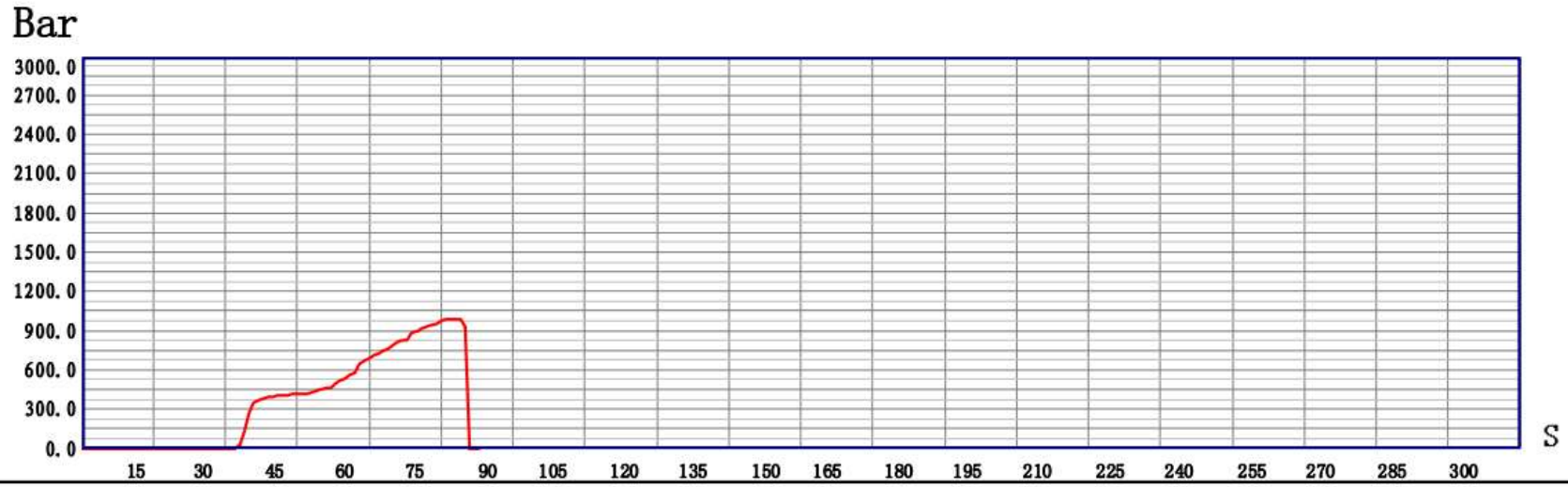

1.2 WMD Forming machine 306
维美德钢管成型机 **306**

WMD Forming machine 306 adopt tow hydraulic system, one hydraulic pressure are 63Mpa, another is 6Mpa, the Ultrahigh pressure was created by piston pump directly, low pressure was created by gear pump, pump and ultrahigh pressure valve are import from Germany brand of HAVE , more efficiency and more quiet.

维美德成型机 **306**是采用双线路液压系统，高压工作压力**63Mpa**, 低压工作压力**6Mpa**, 高压由超高压柱塞直接产生，低压油齿轮泵产生，泵和高压阀都采用德国进口品牌哈威的产品，更高效，更安静。

WMD Forming Machine 306 Configuration

#	Name	Mode	Origin
1	Servo Motor	VeiChi	China/VEICHI
2	Pump1	RZ2.1/2-28	Germany/HAWE
3	Pump2	RZ2.1/2-28	Germany/HAWE
4	Oil Circuit Block	YU-306	Local
5	Valve1	24V多款	Germany/HAWE
6	Valve2	24V多款	China
7	Cylinder1	150/70-63/6	Local
8	Cylinder2	ROB-25-60	Local
9	Radiator	AH1012	China
10	Main board	STM32F407	STM
11	Screen	5X	China
12	Pressure sensor	LVC-1000	Winters
13	Sensor	TB0802N	China
15	Switch	多款	China

1.3 WMD Forming machine 308
维美德钢管成型机 **308**

WMD Forming machine 308 adopt tow hydraulic system, one hydraulic pressure are 63Mpa, another is 6Mpa, the Ultrahigh pressure include interior and exterior two oil ways, gear pump create 18.5Mpa pressure in exterior way, and interior 63Mpa created with two boosters, all valve are working in low pressure of 18.5Mpa and 6Mpa, improve the system stability and extend the life of machine.

维美德成型机 **308**是采用双线路液压系统，高压工作压力**63Mpa**, 低压工作压力**6Mpa**, 高压由内外两层液压油路组成，外围工作液压由齿轮泵产生**18.5Mpa**压力，内围由高性能增压器产成超高工作压力，实现将机械动作频繁的阀块工作在较低压力环境下，提升系统稳定性，延长使用寿命。

WMD Forming Machine 308 Configuration

#	Name	Mode	Origin
1	Motor	三相卧式5.5HP-4P	Taiwan
2	Pump1	50T 7Mpa, 20cc/r	Taiwan
3	Pump2	HGP-2A-F6R	Taiwan
4	Oil Circuit Block	4路，4路	Local
5	Valve	24V多款	Huade
6	Cylinder1	150/70-63/6	Local
7	Cylinder2	ROB-25-60	Local
8	Booster	BSY-3.4T	Deshihong
9	Radiator	AH1012	China
10	Main board	STM32F407	STM
11	Screen	5X	China
12	Pressure sensor	LVC-1000	Winters
13	Sensor	TB0802N	China
15	Switch	多款	China

1.4 WMD Forming machine 60
维美德钢管成型机 **60**

WMD Forming machine 60 adopt one hydraulic system, hydraulic pressure are 28Mpa, all valve are working in low pressure of 28Mpa improve the system stability and extend the life of machine.

维美德成型机 **60**是采用单线路液压系统，高压工作压力**28Mpa**, 实现将机械动作频繁的阀块工作在较低压力环境下，提升系统稳定性，延长使用寿命。

WMD Forming Machine 60 Configuration

#	Name	Mode	Origin
1	Servo Motor	Veichi	China
2	Pump2	HGP-2A-F6R	Local
3	Oil Circuit Block	4路	Local
4	Valve	24V多款	Huade
5	Cylinder1	150/70-63/6	Local
6	Cylinder2	ROB-25-60	Local
7	Radiator	AH1012	China
8	Main board	STM32F407	STM
9	Screen	5X	China
10	Pressure sensor	LVC-1000	Winters
11	Sensor	TB0802N	China
12	Switch	多款	China

1.5 Clamper & die
模具和夹具

Clamper and die is using for WMD forming machine, each type of clamper apply for each diameter of pipe, each type of die should apply for each diameter and thick of pipe, using wrong die and clamper will cause damage , or forged improperly.
该模具和夹具是维美德钢管成型机专用配件，针对不同管径，不同壁厚钢管配合使用，同一管径的钢管可以用同款夹具，不同壁厚的钢管应使用对应的模具，以达到最佳成型效果，错用模具，将造成事故或无法成型。

Clamper & Die 夾具和模具-1

#	S/N	Item Name	Description
2	C-L8	Clamp L8	Clamp for pipe diameter of 8mm
	M-L8X1.0	die L8X1.0	Light type die for pipe diameter of 8mm, thick of 1.0mm
	M-S8X2.0	die S8X2.0	Heavy type die for pipe diameter of 8mm, thick of 2.0mm
3	C-L10	Clamp L10	Clamp for pipe diameter of 10mm
	M-L10X1.5	die L8X1.5	Light type die for pipe diameter of 10mm, thick of 1.5mm
	M-S10X2.0	die S10X2.0	Heavy type die for pipe diameter of 10mm, thick of 2.0mm
4	C-L12	Clamp L12	Clamp for pipe diameter of 12mm
	M-L12X2	die L12X2.0	Light type die for pipe diameter of 12mm, thick of 2.0mm
	M-S12X2.0	die S12X2.0	Heavy type die for pipe diameter of 12mm, thick of 2.0mm
5	C-S14	Clamp S14	Clamp for pipe diameter of 14mm
	M-S14X2.0	die S14X2.0	Heavy type die for pipe diameter of 14mm, thick of 2.0mm
6	C-L15	Clamp L15	Clamp for pipe diameter of 15mm
	M-L15X2	die L15X2.0	Light type die for pipe diameter of 15mm, thick of 2.0mm
7	C-S16	Clamp S16	Clamp for pipe diameter of 16mm
	M-S16X2.0	die S16X2.0	Heavy type die for pipe diameter of 16mm, thick of 2.0mm
8	C-L18	Clamp L18	Clamp for pipe diameter of 18mm
	M-L18X2.0	die L18X2.0	Light type die for pipe diameter of 18mm, thick of 2.0mm
9	C-S20	Clamp S20	Clamp for pipe diameter of 20mm
	M-S20X2.5	die S20X2.5	Heavy type die for pipe diameter of 20mm, thick of 2.5mm

Clamper & Die 夾具和模具-2

#	S/N	Item Name	Description
10	C-L22	Clamp L22	Clamp for pipe diameter of 22mm
	M-L22X2.5	Die L22X2.5	Light type die for pipe diameter of 22mm, thick of 2.5mm
11	C-S25	Clamp S25	Clamp for pipe diameter of 25mm
	M-S25X3.0	Die S25X3.0	Heavy type die for pipe diameter of 25mm, thick of 3.0mm
12	C-L28	Clamp L28	Clamp for pipe diameter of 28mm
	M-L28X3.0	Die L28X3.0	Light type die for pipe diameter of 28mm, thick of 3.0mm
13	C-S30	Clamp S30	Clamp for pipe diameter of 30mm
	M-S30X3.0	Die S30X3.0	Heavy type die for pipe diameter of 30mm, thick of 3.0mm
14	C-L35	Clamp L35	Clamp for pipe diameter of 35mm
	M-L35X3.5	Die L35X3.5	Light type die for pipe diameter of 35mm, thick of 3.5mm
15	C-S38	Clamp S38	Clamp for pipe diameter of 38mm
	M-S38X4.0	Die S38X4.0	Heavy type die for pipe diameter of 38mm, thick of 4.0mm
16	C-L42	Clamp L42	Clamp for pipe diameter of 42mm
	M-L42X4.0	Die L42X4.0	Light type die for pipe diameter of 42mm, thick of 4.0mm

1.6 Consumables
耗材

轻型：L8,L10,L12,L15,L18,L22,L28,L35,L42
重型：S8,S10,S12,S14,S16,S20,S25,S30,S38

Seal Ring 密封圈

#	S/N	Item Name	Description
1	R8	8 seal ring	Sealing ring for pipe of diameter @ 8mm
2	R10	10 seal ring	Sealing ring for pipe of diameter @ 10mm
3	R12	12 seal ring	Sealing ring for pipe of diameter @ 12mm
4	R14	14 seal ring	Sealing ring for pipe of diameter @ 14mm
5	R15	15 seal ring	Sealing ring for pipe of diameter @ 15mm
6	R16	16 seal ring	Sealing ring for pipe of diameter @ 16mm
7	R18	18 seal ring	Sealing ring for pipe of diameter @ 18mm
8	R20	20 seal ring	Sealing ring for pipe of diameter @ 20mm
9	R22	22 seal ring	Sealing ring for pipe of diameter @ 22mm
10	R25	25 seal ring	Sealing ring for pipe of diameter @ 25mm
11	R28	28 seal ring	Sealing ring for pipe of diameter @ 28mm
12	R30	30 seal ring	Sealing ring for pipe of diameter @ 30mm
13	R35	35 seal ring	Sealing ring for pipe of diameter @ 35mm
14	R38	38 seal ring	Sealing ring for pipe of diameter @ 38mm
15	R42	42 seal ring	Sealing ring for pipe of diameter @ 42mm

C-Type Locked Ring C形锁紧环

Carben Steel （碳钢）

#	S/N	Item Name	Description
1	L-L8	8 light C-type locked ring	Light C-type locked ring for pipe of diameter @ 8mm
2	L-S8	8 Heavy C-type locked ring	Heavy C-type locked ring for pipe of diameter @ 8mm
3	L-L10	10 light C-type locked ring	Light C-type locked ring for pipe of diameter @ 10mm
4	L-S10	10 Heavy C-type locked ring	Heavy C-type locked ring for pipe of diameter @ 10mm
5	L-L12	12 light C-type locked ring	Light C-type locked ring for pipe of diameter @ 12mm
6	L-S12	12 Heavy C-type locked ring	Heavy C-type locked ring for pipe of diameter @ 12mm
7	L-S14	14 Heavy C-type locked ring	Light C-type locked ring for pipe of diameter @ 14mm
8	L-L15	15 light C-type locked ring	Heavy C-type locked ring for pipe of diameter @ 15mm
9	L-S16	16 Heavy C-type locked ring	Light C-type locked ring for pipe of diameter @ 16mm
10	L-L18	18 light C-type locked ring	Heavy C-type locked ring for pipe of diameter @ 18mm
11	L-S20	20 Heavy C-type locked ring	Heavy C-type locked ring for pipe of diameter @ 20mm
12	L-L22	22 light C-type locked ring	Light C-type locked ring for pipe of diameter @ 22mm
13	L-S25	25 Heavy C-type locked ring	Heavy C-type locked ring for pipe of diameter @ 25mm
14	L-L28	28 light C-type locked ring	Light C-type locked ring for pipe of diameter @ 28mm
15	L-S30	30 Heavy C-type locked ring	Heavy C-type locked ring for pipe of diameter @ 30mm
16	L-L35	35 light C-type locked ring	Light C-type locked ring for pipe of diameter @ 35mm
17	L-S38	38 Heavy C-type locked ring	Heavy C-type locked ring for pipe of diameter @ 38mm
18	L-L42	42 light C-type locked ring	Light C-type locked ring for pipe of diameter @ 42mm

C-Type Locked Ring C形锁紧环

Stainless steel（不锈钢）

#	S/N	Item Name	Description
1	L-L8-s	8 light C-type locked ring	Light C-type locked ring for pipe of diameter @ 8mm
2	L-S8-s	8 Heavy C-type locked ring	Heavy C-type locked ring for pipe of diameter @ 8mm
3	L-L10-s	10 light C-type locked ring	Light C-type locked ring for pipe of diameter @ 10mm
4	L-S10-s	10 Heavy C-type locked ring	Heavy C-type locked ring for pipe of diameter @ 10mm
5	L-L12-s	12 light C-type locked ring	Light C-type locked ring for pipe of diameter @ 12mm
6	L-S12-s	12 Heavy C-type locked ring	Heavy C-type locked ring for pipe of diameter @ 12mm
7	L-S14-s	14 Heavy C-type locked ring	Light C-type locked ring for pipe of diameter @ 14mm
8	L-L15-s	15 light C-type locked ring	Heavy C-type locked ring for pipe of diameter @ 15mm
9	L-S16-s	16 Heavy C-type locked ring	Light C-type locked ring for pipe of diameter @ 16mm
10	L-L18-s	18 light C-type locked ring	Heavy C-type locked ring for pipe of diameter @ 18mm
11	L-S20-s	20 Heavy C-type locked ring	Heavy C-type locked ring for pipe of diameter @ 20mm
12	L-L22-s	22 light C-type locked ring	Light C-type locked ring for pipe of diameter @ 22mm
13	L-S25-s	25 Heavy C-type locked ring	Heavy C-type locked ring for pipe of diameter @ 25mm
14	L-L28-s	28 light C-type locked ring	Light C-type locked ring for pipe of diameter @ 28mm
15	L-S30-s	30 Heavy C-type locked ring	Heavy C-type locked ring for pipe of diameter @ 30mm
16	L-L35-s	35 light C-type locked ring	Light C-type locked ring for pipe of diameter @ 35mm
17	L-S38-s	38 Heavy C-type locked ring	Heavy C-type locked ring for pipe of diameter @ 38mm
18	L-L42-s	42 light C-type locked ring	Light C-type locked ring for pipe of diameter @ 42mm

SQR nut 功能螺母

#	S/N	Item Name	Description
1	N-L8	L8 nut	nut for light type of pipe of diameter @ 8mm
2	N-S8	S8 nut	nut for heavy type of pipe of diameter @ 8mm
3	N-L10	L10 nut	nut for light type of pipe of diameter @ 10mm
4	N-S10	S10 nut	nut for heavy type of pipe of diameter @ 10mm
5	N-L12	L12 nut	nut for light type of pipe of diameter @ 12mm
6	N-S12	S12 nut	nut for heavy type of pipe of diameter @ 12mm
7	N-S14	S14 nut	nut for heavy type of pipe of diameter @ 14mm
8	N-L15	L15 nut	nut for light type of pipe of diameter @ 15mm
9	N-S16	S16 nut	nut for heavy type of pipe of diameter @ 16mm
10	N-L18	L18 nut	nut for light type of pipe of diameter @ 18mm
11	N-S20	S20 nut	nut for heavy type of pipe of diameter @ 20mm
12	N-L22	L22 nut	nut for light type of pipe of diameter @ 22mm
13	N-S25	S25 nut	nut for heavy type of pipe of diameter @ 25mm
14	N-L28	L28 nut	nut for light type of pipe of diameter @ 28mm
15	N-S30	S30 nut	nut for heavy type of pipe of diameter @ 30mm
16	N-L35	L35 nut	nut for light type of pipe of diameter @ 35mm
17	N-S38	S38 nut	nut for heavy type of pipe of diameter @ 38mm
18	N-L42	L42 nut	nut for light type of pipe of diameter @ 42mm

谢谢！

联系电话：13774668446
Email: service@wmdtech.cn
Web: www.wmdtech.cn