威海万泰创拓液压科技有限公司

WEIHAI TRATO HYDRAULIC TECHNOLOGY CO.LTD.

液压系统 | 螺旋液压摆动油缸





01
关于我们
COMPANY PROFILE

02
制造能力
MANUFACTURING STRENGTH

03
主营产品
MAIN PRODUCTS

04
应用场景
CUSTOMER PERFORMANCE

05
未来展望
FUTURE OUTLOOK

01 关于我们

About us



公司简介Company Profile

威海万泰创拓液压科技有限公司

2020. 08

成立日期Date of establishment

专业从事液压系统、螺旋液压摆动油缸的研发和生产

Specializing in the research and development, and production of hydraulic systems, and hydraulic rotary actuator

山东省高新技术企业

Shandong Province High tech Enterprise

山东威海

一厂区Plant Zone 1

二厂区Plant Zone 2

12000 台套/年set/year

生产能Pproduction capacity

15000㎡

工厂面积Plant area

100+台unit

专业设备Processing equipment

8000 ㎡

工厂面积Production capacity

70+台unit

专业设备Processing equipment





公司发展历程 Company Development History

2020. 08

公司成立，位于威海经区众科工业园，厂房面积2000㎡

The company was established in 2020 and is located in the Zhongke Industrial Park in Weihai Economic Development Zone, with a factory area of 2000 square meters.

2021. 04

通过ISO9001质量管理体系认证

Certified by ISO9001 Quality Management System

2021. 07

获得十余项摆动油缸专利证书

Obtained more than ten patents for Hydraulic Rotary Actuator

2022. 01

威海万泰磁电科技有限公司注资威海创拓液压科技有限公司

Obtained capital injection from Weihai Wantai Magnetoelectric Technology Co., Ltd

2022. 03

搬迁至威海市环翠区桥头镇旺桥路28号，厂房面积5000㎡

Relocate to No. 28, Wangqiao Road, Qiaotou Town, Huancui District, Weihai City, with a factory building area of 5000 square meters.

2022. 04

威海万泰磁电与威海万泰创拓完成工商变更

The business registration changes were finalized in April 2022.

2022. 11

获得山东省高新技术企业称号

Obtained the title of Shandong Province High tech Enterprise in November 2022

2022. 12

搬迁至威海市环翠区桥头镇桥顺路北兴达路东，厂房面积15000㎡

Relocated to No. 166 Qiaoshun Road, Qiaotou Town, Huancui District, Weihai City in December 2022, with a factory building area of 15,000 square meters.



荣誉资质 Company Certifications & Honors



自主知识产权Invention Patent



组织架构Organization Structure

威海万泰磁电科技有限公司
Weihai Wantai Magnetoelectric Technology Co., Ltd

管理者代表Management Representative

威海利德机电设备有限公司
Weihai Lide Electromechanical Equipment Co., Ltd

威海万泰创拓液压科技有限公司
Weihai Trato Hydraulic Technology Co., Ltd
摆动油缸事业部
Hydraulic Rotary Actuator Division

威海得益衡机电设备有限公司
Weihai Deyiheng Electromechanical Equipment Co., Ltd
电机事业部
Motor Division

生产技术部
Manufacturing Department

- 车床工段 Lathe operations
- 加工中心工段 CNC
- 滚齿工段 Gear Hobbing Process
- 组装工段 Assembly Process

综合管理部
Integrated Management Department

- 经营管理 Business Operations
- 项目开发 Project Development
- 采购 Strategic Procurement
- 销售 Sales
- 仓储物流 Warehousing & Logistics Management

品质保证部
Quality Assurance Department

- 品质管理 Quality Management
- 检验测量 Inspection & Measurement

财务部
Finance Department

人员结构Personnel Composition

158人
员工总数
Total Workforce

11%
技术研发人员占比
R&D personnel Proportion

10%
品管占比
Quality staff Proportion

工作经验平均年数

6 年year	8 年year	12 年year
研发人员	品质管理人员	技术人员
R&D personnel	R&D personnel	Technical staff



客户资源


XCMG 徐工集团
中国中铁
CSSC 中船重工
中国煤科 CCTEG
WUXIN
中国铁建 铁建重工
TXSL 泰鑫机械
YWD 兖能泰德
万泰创拓
部分客户
天河科技 TIANHE SCIENCE
CK 江苏常矿 CHANG KUANG
耿力机械 GENG LI MECHANICS
N.TRAFFIC
华泰钻机
鹏翔重工
蓝海智装 LANHI
崇矿安
森远
贵州安百泰
银华机械 YINHUA MACHINERY



02 制造能力

MANUFACTURING STRENGTH

制造能力：生产工厂
Manufacturing Strength Workshop



制造能力： Manufacturing Strength 加工设备 Machinery

滚齿机 Gear Hobbing Machine



立式数控车 Vertical CNC Lathe





立式加工中心 Vertical Machining Center (VMC)







制造能力： Manufacturing Strength 加工设备 Machinery

数控车齿机 CNC Gear Hobbing Lathe



数控旋风铣 CNC Thread Whirling Machine



数控走心机 CNC Swiss-Type Lathe



外圆磨床 Cylindrical Grinding Machine



斜轨数控车Inclined Bed CNC Lathe



卧式加工中心 Horizontal Machining Center (HMC)



制造能力：Manufacturing Strength 仓库 Warehouse

半成品库
Semi-Finished Components Warehouse



成品库
Product Warehouse



零件库
Finished Parts Storage



零件库细节
Component Details



制造能力： Manufacturing Strength 喷漆 Spray Painting





质量保证： Quality Assurance 检验设备 Inspection equipment



三坐标 Three-dimensional

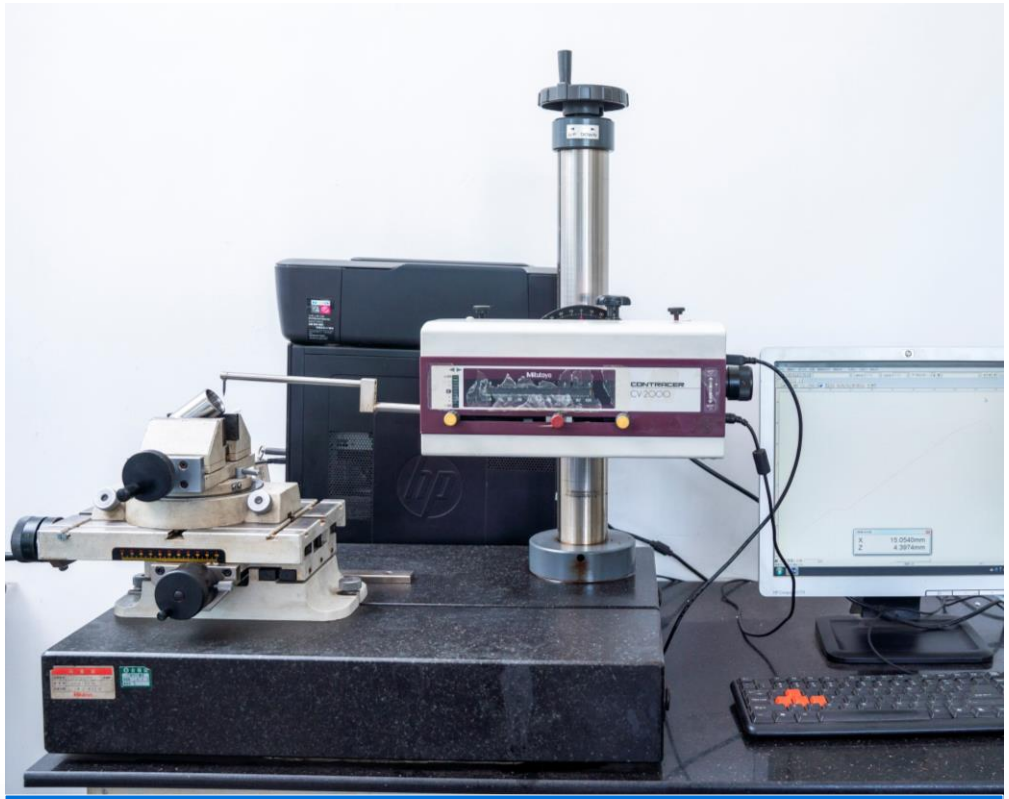

轮廓仪Profilometer



光洁度仪Surface Finish Measuring Instrument

质量保证： Quality Assurance 检验设备 Inspection equipment

数显高度尺
Digital Height Gauge

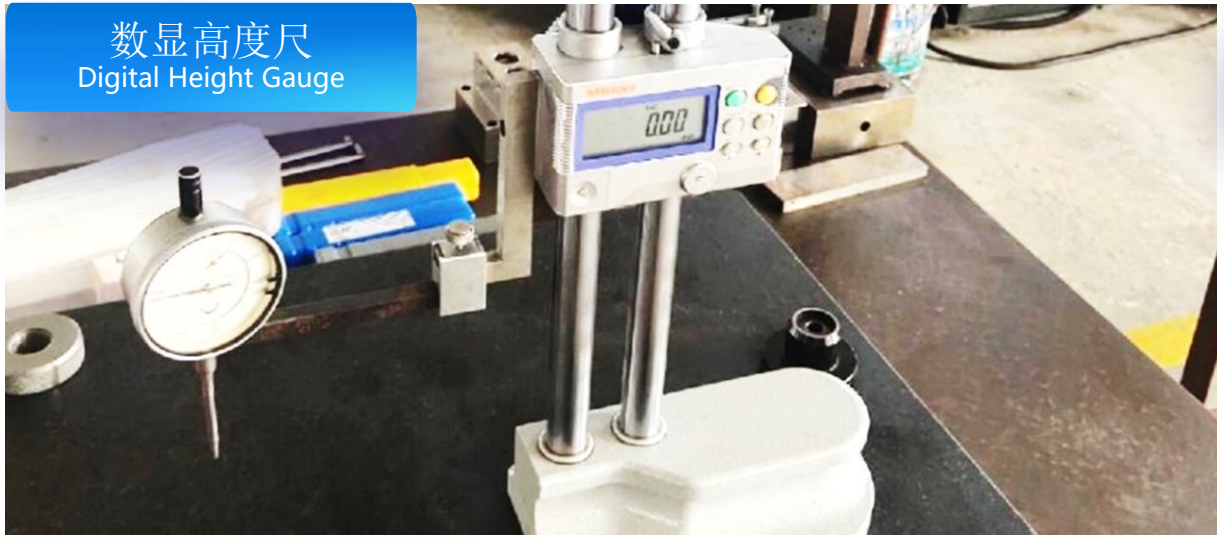

里氏硬度计
Leeb Hardness Tester



磁粉探伤仪
Magnetic Particle Flaw Detector



洛氏硬度计
Rockwell Hardness Tester





03 主营产品

MAIN PRODUCTS

主营业务Main Business

公司在引进、消化和吸收国内外先进的技术和工艺基础上，再创新研发开发各类液压系统及装备。

The company introduces, digests, and absorbs advanced technologies and processes from both domestic and foreign sources, and then innovates to research and develop various hydraulic systems and equipment.

液压摆动油缸Hydraulic Rotary Actuator

内部采用组合螺旋齿结构，使整个摆动液压缸可在较小的空间内作出较大的扭矩，在保证高动力输出的前提下依然可实现精确、容易地控制。

The internal adoption of a combined spiral gear structure enables the hydraulic rotary actuator to generate significant torque within a small space, ensuring precise and easy control while maintaining high power output.



外形尺寸小
Compact Dimensions

输出扭矩大
High torque

精度高
Superior Precision

能精准控制
Accurate Control

主营产品： Main Products 摆动油缸 Hydraulic Rotary Actuator

旋转角度多样

Diverse Rotation Angles

旋转角度90° 到360° 可选

Rotation angles from 90° to 360° are optional High Load Capacity

高承载能力

High Load Capacity

可承受较高轴向和径向负载

Can withstand high axial and radial loads

零内泄漏

Zero Internal Leakage

产品制作精良 零内泄漏

Product is well-made with zero internal leakage

安装方式多样

Diverse Installation Methods

简化旋转运动结构

Simplifies the structure of rotational movement

应用于旋转运动空间有限且要求大扭矩的场合。

Applied in situations where the space for rotational motion is limited but requires high torque.

应用领域 Application fields



矿山设备钻臂的摆动定位

Swing positioning of mining equipment boom



高空作业车

Aerial work platform



隧道工程设备

Tunnel engineering equipment

产品细节 Product Details



八大系列 Eight Major Series

CT1系列
紧凑，中等强度
Compact, medium strength



CT2系列
标准，为高空车设计
Standard, designed for aerial work platforms

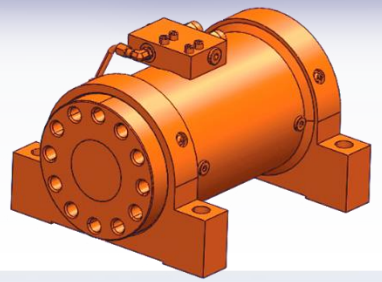

CT3系列
重载，重型应用
Heavy-duty, for rugged applications

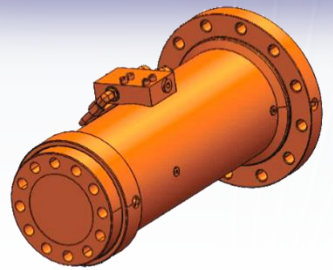

CT4系列
高寿命
Extended service life

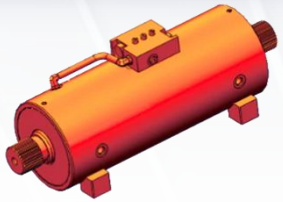

CT5系列
为挖掘机挖斗设计
Engineered for excavator buckets

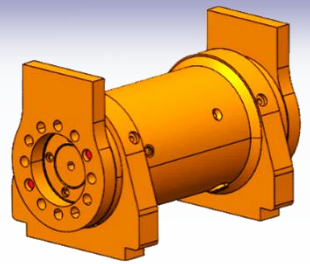

CT6系列
高弯矩
High bending moment resistance

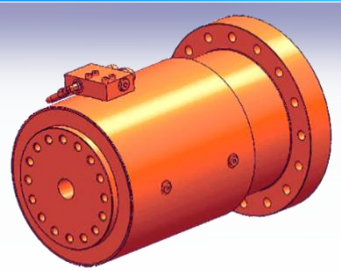

CT7系列
阀门控制器专用
Dedicated to valve control systems

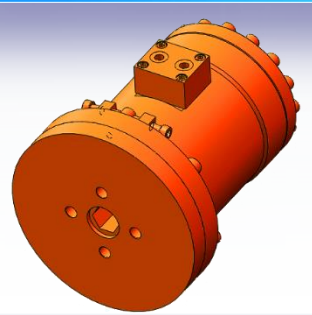

CT8系列
平键轴输出
Flat key shaft output

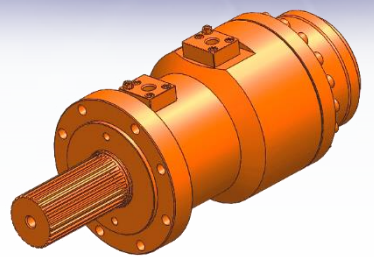

定制产品 Customized products

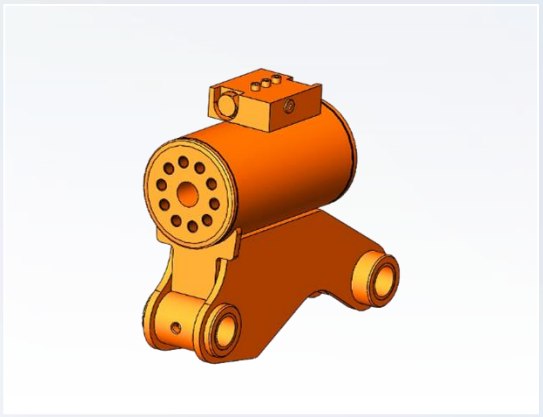
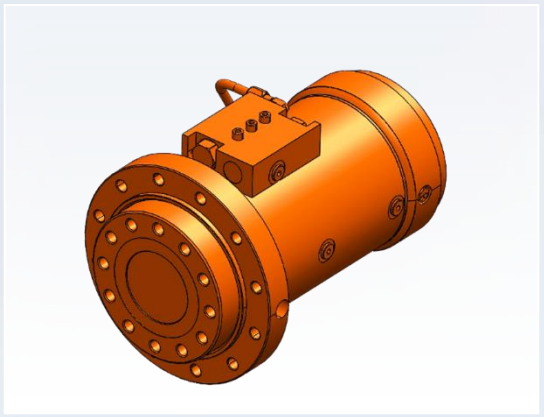
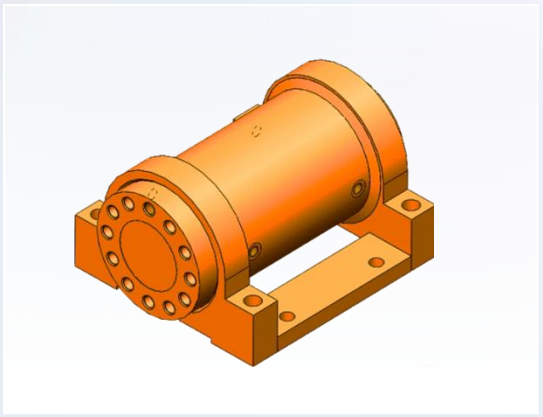
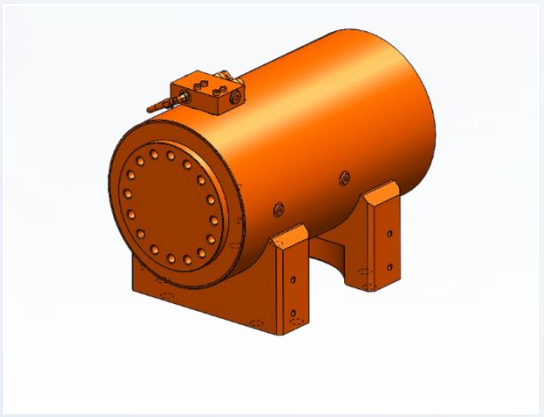
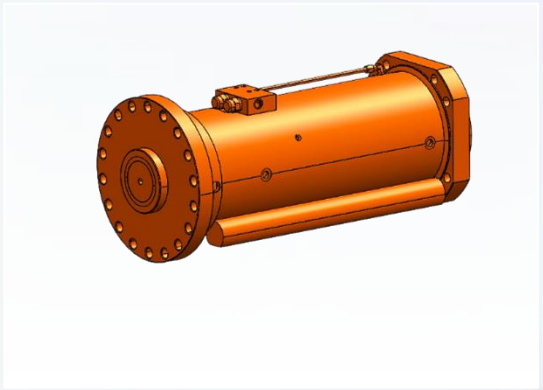
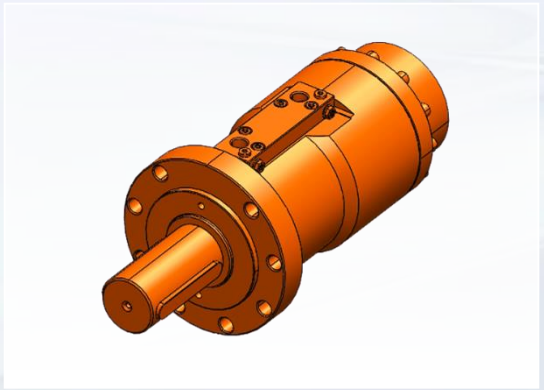
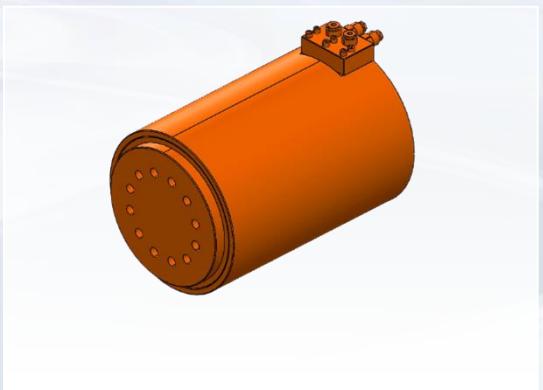
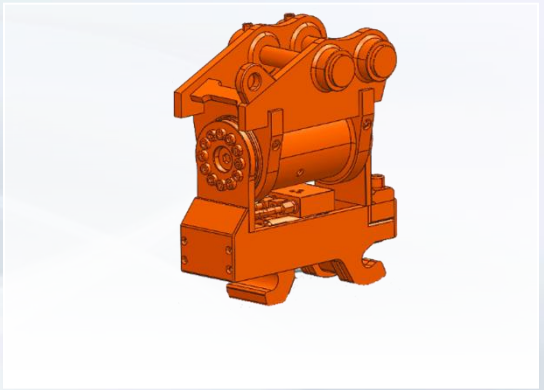

产品服务于中船重工713研究所、中铁工程集团、徐工集团等大型制造业企业。

The products serve large manufacturing enterprises such as the 713 Research Institute of China Shipbuilding Industry Corporation, China Railway Engineering Group, and XCMG Group.

04

应用场景

CUSTOMER PERFORMANCE



应用场景：拱架台车 Arched trolley



应用场景：凿岩台车 Rock drilling trolley



应用场景：掘锚机 Alpine bolter miner

掘锚护一体机

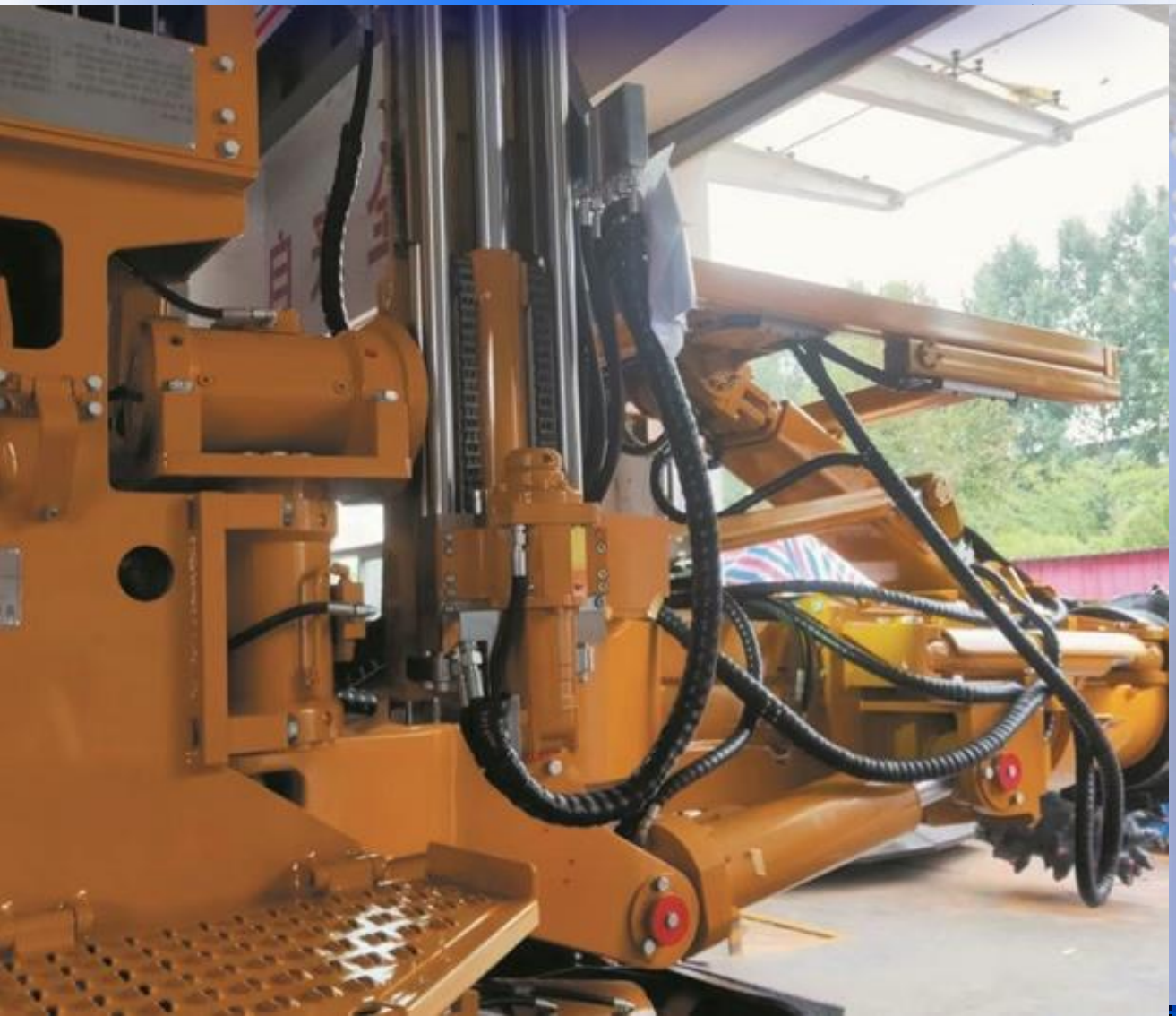

掘锚机



应用场景：高空车 Aerial Work Vehicle





应用场景：撬毛台车 Scaling rig



应用场景：湿喷台车 Concrete injector





应用场景：巷道修复 Laneway maintenance





应用场景：挖机倾斜快换 Excavator tilting quick change





应用场景：垃圾车 Garbage truck





应用场景：绿篱修剪车 Green hedge trimmer



05

未来展望

Future outlook

愿景与使命 Vision and Mission

发展愿景 Development Vision

成为领先的液压摆动油缸提供商

To become a leading provider of hydraulic swing cylinders.

企业使命 Corporate Mission

为全球工程机械、矿山机械等行业提供高品质的液压摆动油缸

To provide high-quality hydraulic swing cylinders for the global construction machinery, mining machinery, and other industries.



文化理念 Cultural Philosophy

核心价值观 Core Values

诚信 Integrity / 创新 / Innovation / 团队 / Teamwork / 感恩 / Gratitude

产品理念 Product Philosophy

专注，是优秀的开端 Focus, is the beginning of excellence / 水准，是修炼的过程 / Standard, is the process of cultivation

开拓，是成长的必然 Pioneering, is the necessity of growth / 进取，是成功的基因 / Progressiveness, is the gene of success

工作原则 Work Principles

制度规范化 / 工作流程化 / 管理人性化 / 执行严格化

System Standardization / Work Process / Management Humanization / Strict Execution

质量观 Quality View

没有挑剔的客户 There are no picky customers / 只有不完美的产品 / Only imperfect products

万泰创拓

行匠心 创未来

威海万泰创拓液压科技有限公司

WEIHAI TRATO HYDRAULIC TECHNOLOGY CO.LTD.