PINGLI®

Bringing Safety
to the World

Dongguan Pingli Hardware Co., Ltd.

Address: Building 1, No. 2, Sun'erpai Road, Zhutang
Village, Fenggang Town, Dongguan City
Telphone: 0769-82527907 0769-82078387
Website: http://en.dgplwj.com
Email: hwh@dgplwj.com

PINGLI®

Ceaselessly improve
product safety

Dongguan Pingli Hardware Co., Ltd.



Version: 5

Company Profile

Dongguan Pingli Hardware Co., Ltd. is a national high-tech enterprise integrating R&D, production and sales of eyebolts, swivel lifting eyebolts, chain slings and other safety components. Founded in November 2006 and established in November 2013,the company covers a plant area of over 7,700 square meters, with multiple dedicated production equipment and sets of advanced testing equipment, an independent product mechanical testing center,a physical and chemical test center as well as a professional technical design and management team.The company is certified to ISO9001 quality management system and holds numerous product patents.The products it develops and produces have passed the EU CE safety certification, the German DGUV certification and the China Classification Society (CCS)certification. The products have been insured globally by PICC (People's Insurance Company of China), including the United States and Canada.

Adhering to the quality concept of "Safety First" and the customer-oriented tenet of "Service Upmost", PINGLI is committed to providing customers with safe and reliable lifting products and developing "Pingli" into an international brand.

平力®

PINGLI® YTJ®

Vision: PINGLI products are applied to equipment worldwide.

Business Philosophy: Service Upmost, Safety First.

Quality Policy: Make each product with superior quality for safety guarantee, and ceaselessly improve product safety!









PINGLI Product Certification















PINGLI Product Patent Certificate

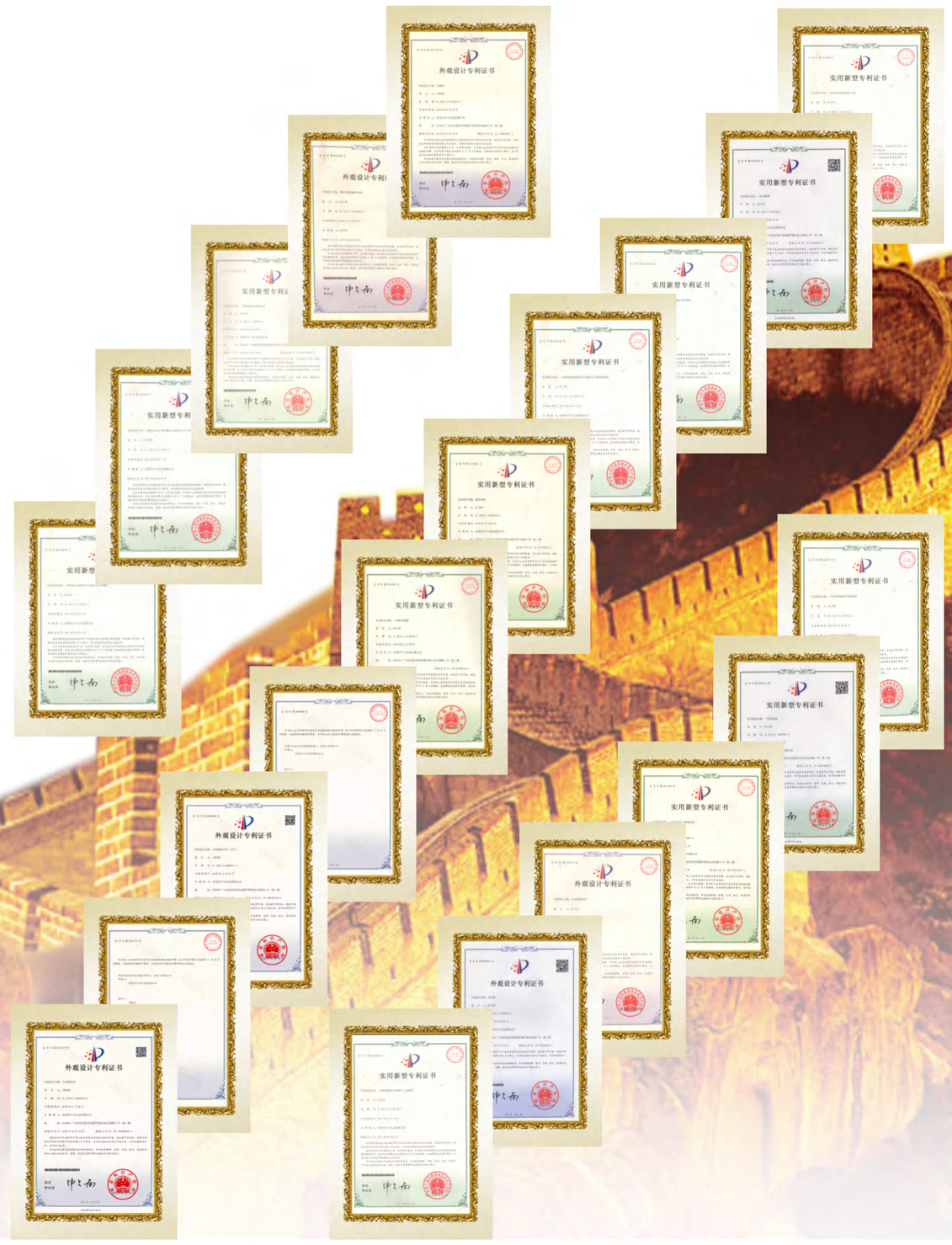

Product quality assurance



Raw material:
Implement spectroscopic detection and compositional analysis on raw materials to ensure that the alloy element content of all raw materials complies with standards.

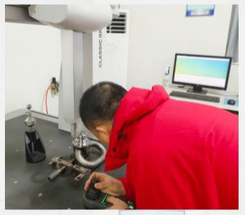

Processing process:
Each processing sequence strictly implements first article inspection, self-inspection, and special inspection to ensure that the product processing accuracy fully meets design specifications.



Heat treatment:
After heat treatment, hardness testing and metallographic micro control are conducted to ensure that the internal structure of the product material is uniform and meets technical requirements.



Thread:
The thread precision is 6g,100% inspected with a go/no-go gauge to ensure that the threads fully meet standard requirements.



MPI:
Magnetic particle tested to ensure that there are no cracks.



Tensile Test:
The product is tested at a load of 4 times the static strength safe working load to ensure that the product load meets technical requirements.

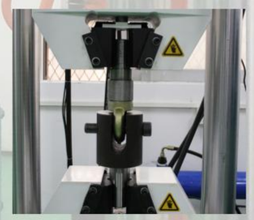

Fatigue test:
The product is subjected to a dynamic fatigue test of 20000 cycles at 1.5 times the WLL to ensure copmliance with technical requirements.



Shipment:
Each product is shipped with thread protection , packaged with model foam and a cardboard box, and accompanied by Conformity Certificate & Use and Maintenance Manual to prevent damage and ensure personnel receive guidance on standardized operations.



Liability insurance:
The product is covered by product liability insurance,and we will be responsible for any safety accidents caused by product quality while ensuring correct and standardized use of the product.



Technical support&annual inspection:
Obligation to provide technical support and training services to customers,and provide annual inspection services for our company's products to ensure their safe and sustainable use.

Product Catalog List

PA G100 Universal Swivel Lifting Eyebolts 01
PE G80 Universal Swivel Lifting Eyebolts 03
YTJ Universal Swivel Lifting Eyebolts 05
PDSS Universal Swivel Lifting Eyebolts 07
CX Lateral Swivel Lifting Eyebolts 11
PB G100 Swivel Lifting Eyebolts With Key 13
PSA Anchor Point for Personal Protective Equipment 15
PC G80 Alloy Steel Lifting Eyebolts 17
PD DIN580 Carbon Steel Lifting Eyebolts 19
S6 / T8 Bow Shackle 21
PW Universal Swivel Lifting Base 23
DMK11 Lifting Lugs With Lifting Pin and Safety Ring 24
DMK12 Lifting Lugs With Lifting Pin and Safety Ring 25
DMK10 Lifting Lugs With Lifting Pin and Safety Ring 26
DMK13 Lifting Lugs With Lifting Pin and Safety Ring 26
DMK15 Lifting Lugs With Lifting Pin and Safety Ring 27
DMZ G80 Alloy Steel Lifting Lugs 27
DB Lifting Pin 28
DB2 Lifting Pin 29
DB3 Lifting Pin 30
DB4 Lifting Pin 30
DMP/DMPL Lifting Hooks-Plate Type 31
DMH/DMHL Lifting Hooks(Lifting Studs) 33
DMU Lifting Hooks-Insert Type 35
DMPH Lifting Hooks 36
T-Shaped Bolts 37
PYC G80 Alloy Steel Extension Rods For Lifting Eyebolt 37
DMA G80 Alloy Steel Lifting Rods With Thread 38
DMN/DMNL Hooks- Bolt Type / Large Head Bolt Type 38
DMB Support Bolts 39
DMC Cast-in Lifting Bolts 39
DMD Cast-in Lifting Bolts 40
DMF/DMFL Cast-in Lifting Hooks 40
PL G80 Chain Slings 41
G80 Master Link Assembly / Self Locking Hooks 42
G80 Master Link / Connecting Link 43
G80 Lifting Chain 44
Storage Rack for Lifting Eyebolts 44

PA G100 Universal Swivel Lifting Eyebolts

Manufacture and test criteria:
EN ISO 12100:2010,EN ISO 3266:2010+A1:2015,EN 1677-1:2000+A1:2008
Patent No.:ZL 2016 3 0014589.0　ZL 2017 2 0145134.1　ZL 2021 3 0357121.2

Manufacturing process: high-strength alloy steel - forging forming - normalizing - rough machining - quenching and tempering - precision machining - surface finish

Drawing / Product specification

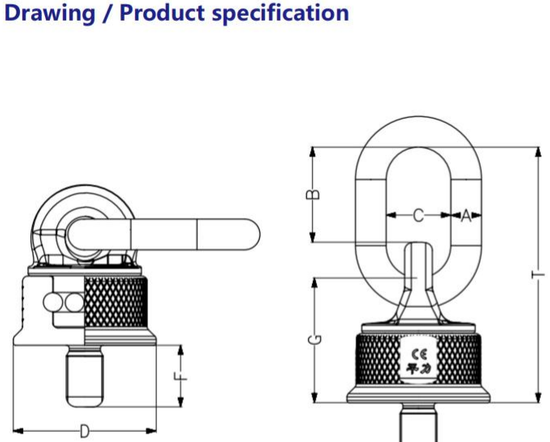

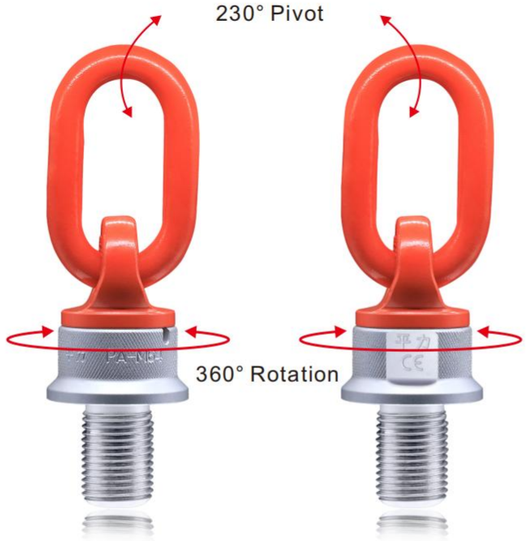

Metric Thread(PA)

Upgraded version

Model	M	A±1	B±5	C±3	D±0.5	F±0.2	G±2	T±5	Weight (KG)	Torque (Nm)
PA-M8	M8x1.25	14	44	37	60	13	62	122	1.2	10
PA-M10	M10x1.5	14	44	37	60	17	62	122	1.25	10
PA-M12	M12x1.75	14	44	37	60	21	62	122	1.3	10
PA-M16	M16x2.0	14	44	37	60	27	62	122	1.35	30
PA-M20	M20x2.5	20	67	42	70	33	78	162	2.4	70
PA-M24	M24x3.0	20	67	42	81	40	80	165	3.4	150
PA-M30	M30x3.5	25	82	51	93	50	91	201	4.34	350
PA-M36	M36x4.0	25	82	51	93	54	91	201	4.8	410
PA-M42	M42x4.5	26.5	111	65	105	63	93	235	6.48	550
PA-M48	M48x5.0	26.5	111	65	105	68	93	235	6.74	550
PA-M56	M56x5.5	32	119	70	125	84	110	265	10.8	800
PA-M64	M64x6.0	32	119	70	125	94	110	265	11.53	800
PA-M72	M72x6.0	45	132	90	170	108	150	330	26.7	1200
PA-M80	M80x6.0	45	132	90	170	120	150	330	27.8	1200
PA-M90	M90x6.0	45	132	90	170	135	150	330	30.6	1200

UNC Thread(PA)

Model	M	A±1	B±5	C±3	D±0.5	F±0.2	G±2	T±5	Weight (KG)	Torque (Nm)
PA-U5/16	UNC5/16-18	14	44	37	60	13	62	122	1.2	10
PA-U3/8	UNC3/8-16	14	44	37	60	17	62	122	1.25	10
PA-U1/2	UNC1/2-13	14	44	37	60	21	62	122	1.3	10
PA-U5/8	UNC5/8-11	14	44	37	60	27	62	122	1.35	30
PA-U3/4	UNC3/4-10	20	67	42	70	33	78	162	2.4	70
PA-U7/8	UNC7/8-9	20	67	42	81	40	80	165	3.4	150
PA-U1"	UNC1"-8	20	67	42	81	40	80	165	3.5	150
PA-U1 1/4	UNC1 1/4-7	25	82	51	93	50	91	201	4.4	350
PA-U1 1/2	UNC1 1/2-6	25	82	51	93	54	91	201	4.9	410
PA-U1 3/4	UNC1 3/4-5	26.5	111	65	105	63	93	235	6.5	550
PA-U2"	UNC2"-4 1/2	26.5	111	65	105	68	93	235	6.8	550
PA-U2 1/2	UNC2 1/2-4	32	119	70	125	94	110	265	11.5	800

Product Features:

- Unique ball bearing design,suitable for 360°rotation and 230°pivot. Safety factor 4:1 is guaranteed in all permitted load direction.
- Forged from G100 high-strength Cr-Mo alloy steel,quenched and tempered to ensure sufficient strength and toughness.
- Manufactured and tested in accordance with the relevant standards of EU specification EN1677-1;certified with EuroCert CE.
- All products can be traced for quality through production and testing records.
- Metric threads meet DIN EN 13 (M-6g),UNC threads comply with ASME/ANSI B18.3.1M (UNC-2A).100% go-no go tested, with a 6g outer diameter tolerance grade.
- 100% magnetic particle inspected to ensure zero cracks.
- Dynamic fatigue rated to 20,000 cycles at 1.5 times the WLL.
- Easy to attach or dismantle due to the circular knurling and handle hole.
- Unique item number facilitates easy use,safety records and traceability.

Eyebolt Operation:

- Ensure the tapped hole has sufficient threaded length to engage the eyebolt shank fully.
- The eyebolt must be mounted vertically on flat support surface and fully seated.
  (For a single lifting simply with a proper wrench or handle to manually tighten the bolts;If the lifting point will be permanently installed,a tool may be employed to lock in place with the specified torque).
- The minimum rated load can be used at full load in all permitted directions.Max rated load (show in parentheses) serves as the max working load when lifting vertically.
- The eyebolt can rotate under rated load,but not suitable for continual rotation under full load in 90° direction.
- Read the Use and Maintenance Manual carefully before use and strictly follow.

Periodic Inspection:

- In-service eyebolts are required to be inspected quarterly by company's internal personnel and record the inspection results.
- In-service eyebolts shall receive annual inspection by manufacturer or a competent third body.

Load Table with Different Lifting Methods

Lifting method

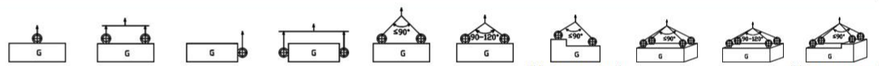

Number of lifting points		1	2	1	2	2	2	2	3-4	3-4	3-4
Lifting angle		0°	0°	90°	90°	≤90°	90–120°	≤90°	≤90°	90–120°	≤90°
Model	Thread	Working Load Limit (WLL) t									
PA-M8	M8x1.25	0.6	1.2	**0.3(0.4)**	0.6	0.4	0.3	0.3	0.6	0.4	0.3
PA-M10	M10x1.5	0.9	1.8	**0.45(0.6)**	0.9	0.6	0.4	0.4	0.9	0.6	0.4
PA-M12	M12x1.75	1.2	2.4	**0.6(0.8)**	1.2	0.8	0.6	0.6	1.2	0.9	0.6
PA-M16	M16x2.0	2.6	5.2	**1.3(1.5)**	2.6	1.8	1.3	1.3	2.7	1.9	1.3
PA-M20	M20x2.5	4	8	**2(2.5)**	4	2.8	2	2	4.2	3	2
PA-M24	M24x3.0	7	14	**3.5(4.0)**	7	4.9	3.5	3.5	7.3	5.2	3.5
PA-M30	M30x3.5	10	20	**5(6.0)**	10	7	5	5	10.5	7.5	5
PA-M36	M36x4.0	15	30	**8(9.0)**	16	11.2	8	8	16.8	12	8
PA-M42	M42x4.5	17	34	**12(12)**	24	16.8	12	12	25.2	18	12
PA-M48	M48x5.0	18	36	**13(15)**	26	18.2	13	13	27.3	19.5	13
PA-M56	M56x5.5	28	56	**16(22)**	32	22.4	16	16	33.6	24	16
PA-M64	M64x6.0	28	56	**16(25)**	32	22.4	16	16	33.6	24	16
PA-M72	M72x6.0	50	100	**31.5(38)**	63	44.1	31.5	31.5	66.15	47.25	31.5
PA-M80	M80x6.0	50	100	**35(42)**	70	49	35	35	73.5	52.5	35
PA-M90	M90x6.0	50	100	**40(45)**	80	56	40	40	84	60	40

Load Table with Different Lifting Methods

PA-U5/16	UNC5/16-18	0.6	1.2	**0.3(0.4)**	0.6	0.4	0.3	0.3	0.6	0.4	0.3
PA-U3/8	UNC3/8-16	0.9	1.8	**0.45(0.6)**	0.9	0.6	0.45	0.45	0.9	0.6	0.45
PA-U1/2	UNC1/2-13	1.2	2.4	**0.6(0.8)**	1.2	0.8	0.6	0.6	1.2	0.9	0.6
PA-U5/8	UNC5/8-11	2.6	5.2	**1.3(1.5)**	2.6	1.8	1.3	1.3	2.7	1.9	1.3
PA-U3/4	UNC3/4-10	4	8	**2(2.5)**	4	2.8	2	2	4.2	3.0	2
PA-U7/8	UNC7/8-9	6	12	**3(3.5)**	6	4.2	3	3	6.3	4.4	3
PA-U1"	UNC1"-8	7	14	**3.5(4.0)**	7	4.9	3.5	3.5	7.4	5.2	3.5
PA-U1 1/4	UNC1 1/4-7	10	20	**5(6.0)**	10	7.0	5	5	10.5	7.5	5
PA-U1 1/2	UNC1 1/2-6	16	32	**8(9.0)**	16	11.2	8	8	16.8	12.0	8
PA-U1 3/4	UNC1 3/4-5	17	48	**12(12)**	24	16.8	12	12	25.2	18.0	12
PA-U2"	UNC2"-4 1/2	18	52	**13(15)**	26	18.2	13	13	27.3	19.5	13
PA-U2 1/2	UNC2 1/2-4	28	56	**16(25)**	32	22.4	16	16	33.6	24.0	16

⚠ WARNING

NEVER EXCEED PUBLISHED WOKING LOAD LIMIT.

PE G80 Universal Swivel Lifting Eyebolts

Manufacture and test criteria:
EN ISO 12100:2010,EN ISO 3266:2010+A1:2015,EN 1677-1:2000+A1:2008
Patent No.:ZL 2021 3 0357121.2

Manufacturing process: high-strength alloy steel - forging forming - normalizing - rough machining - quenching and tempering - precision machining - surface finish

Drawing / Product specification

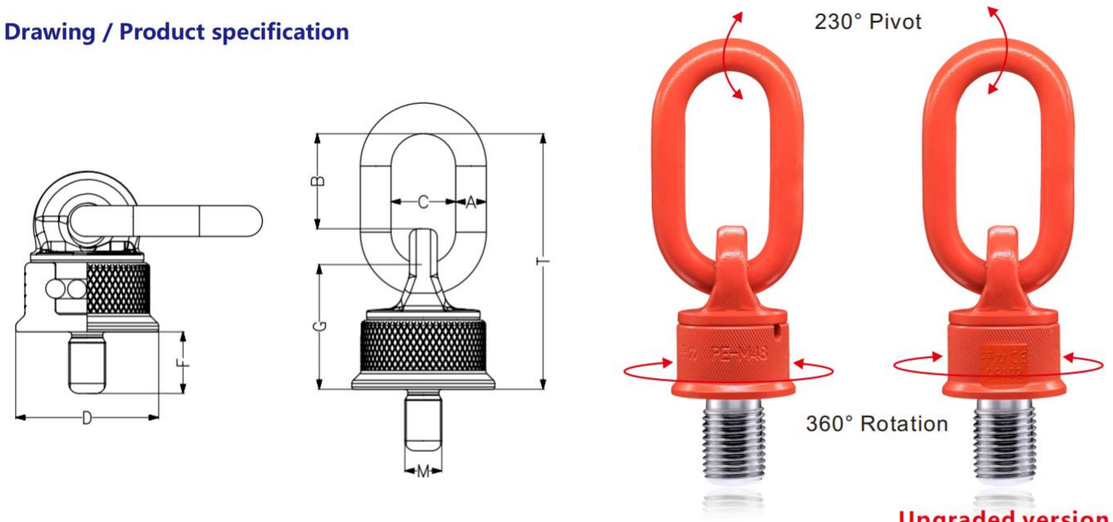

Upgraded version

Metric Thread(PE)

Model	M	A±1	B±5	C±3	D±0.5	F±0.2	G±2	T±5	Weight (KG)	Torque (Nm)
PE-M8	M8x1.25	13	44	31	40	13	44	98	1.08	10
PE-M10	M10x1.5	13	44	31	40	17	44	98	1.1	10
PE-M12	M12x1.75	13	44	35	60	21	62	122	1.1	10
PE-M16	M16x2.0	13	44	35	60	27	62	122	1.15	30
PE-M20	M20x2.5	20	68	42	70	33	78	163	2.3	70
PE-M24	M24x3.0	20	68	42	70	40	78	163	2.75	150
PE-M30	M30x3.5	26	83	52	81	50	90	198	3.8	350
PE-M36	M36x4.0	26	83	52	81	54	90	198	4.25	410
PE-M42	M42x4.5	26	112	63	93	63	97	236	5.85	550
PE-M48	M48x5.0	26	112	63	93	68	97	236	6.02	550
PE-M56	M56x5.5	32	126	70	105	84	124	278	9.91	800
PE-M64	M64x6.0	32	126	70	105	94	124	278	10.55	800
PE-M72	M72x6.0	45	139	90	160	108	165	344	24.8	1200
PE-M80	M80x6.0	45	139	90	160	120	165	344	25.53	1200
PE-M90	M90x6.0	45	139	90	170	135	165	344	29.05	1200
PE-M100	M100x6.0	45	139	90	170	150	165	344	30.5	1200

UNC Thread(PE)

Model	M	A±1	B±5	C±3	D±0.5	F±0.2	G±2	T±5	Weight (KG)	Torque (Nm)
PE-U5/16	UNC5/16-18	13	44	31	40	13	44	98	1.08	10
PE-U3/8	UNC3/8-16	13	44	31	40	17	44	98	1.1	10
PE-U1/2	UNC1/2-13	14	44	35	60	21	62	122	1.1	10
PE-U5/8	UNC5/8-11	14	44	35	60	27	62	122	1.15	30
PE-U3/4	UNC3/4-10	20	68	42	70	33	78	163	2.3	70
PE-U7/8	UNC7/8-9	20	68	42	70	40	78	163	2.75	150
PE-U1"	UNC1"-8	20	68	42	70	40	78	163	2.8	150
PE-U1 1/4	UNC1 1/4-7	26	83	52	81	50	90	198	3.96	350
PE-U1 1/2	UNC1 1/2-6	26	83	52	81	54	90	198	4.48	410
PE-U1 3/4	UNC1 3/4-5	26	112	63	93	63	97	236	6.23	550
PE-U2"	UNC2"-4 1/2	26	112	63	93	68	97	236	6.41	550
PE-U2 1/2	UNC2 1/2-4	32	126	70	105	94	124	278	10.54	800

Product Features:

- Unique ball bearing design,suitable for 360°rotation and 230°pivot. Safety factor 4:1 is guaranteed in all permitted load direction.
- Forged from G80 high-strength Cr-Mo alloy steel,quenched and tempered to ensure sufficient strength and toughness.
- Manufactured and tested in accordance with the relevant standards of EU specification EN1677-1;certified with EuroCert CE.
- All products can be traced for quality through production and testing records.
- Metric threads meet DIN EN 13 (M-6g),UNC threads comply with ASME/ANSI B18.3.1M (UNC-2A).100% go-no go tested, with a 6g outer diameter tolerance grade.
- 100% magnetic particle inspected to ensure zero cracks.
- Dynamic fatigue rated to 20,000 cycles at 1.5 times the WLL.
- Easy to attach or dismantle due to the circular knurling and handle hole.
- Unique item number facilitates easy use,safety records and traceability.

Eyebolt Operation:

- Ensure the tapped hole has sufficient threaded length to engage the eyebolt shank fully.
- The eyebolt must be mounted vertically on flat support surface and fully seated.
  (For a single lifting simply with a proper wrench or handle to manually tighten the bolts;If the lifting point will be permanently installed,a tool may be employed to lock in place with the specified torque).
- The minimum rated load can be used at full load in all permitted directions.Max rated load (show in parentheses) serves as the max working load when lifting vertically.
- The eyebolt can rotate under rated load,but not suitable for continual rotation under full load in 90° direction.
- Read the Use and Maintenance Manual carefully before use and strictly follow.

Periodic Inspection:

- In-service eyebolts are required to be inspected quarterly by company's internal personnel and record the inspection results.
- In-service eyebolts shall receive annual inspection by manufacturer or a competent third body.

Load Table with Different Lifting Methods

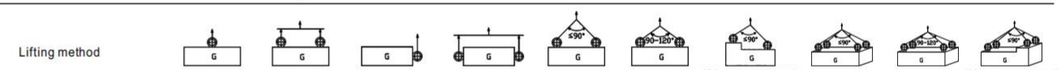

Number of lifting points		1	2	1	2	2	2	2	3-4	3-4	3-4
Lifting angle		0°	0°	90°	90°	≤90°	90–120°	≤90°	≤90°	90–120°	≤90°
Model	Thread	Working Load Limit (WLL) t									
PE-M8	M8x1.25	0.6	1.2	**0.3(0.4)**	0.6	0.4	0.3	0.3	0.6	0.4	0.3
PE-M10	M10x1.5	0.9	1.8	**0.45(0.6)**	0.9	0.6	0.4	0.4	0.9	0.6	0.4
PE-M12	M12x1.75	1.1	2.2	**0.55(0.8)**	1.1	0.77	0.55	0.55	1.1	0.83	0.55
PE-M16	M16x2.0	2.4	4.8	**1.2(1.5)**	2.4	1.68	1.2	1.2	2.4	1.8	1.2
PE-M20	M20x2.5	3.8	7.6	**1.9(2.1)**	3.8	2.66	1.9	1.9	3.8	2.85	1.9
PE-M24	M24x3.0	6.4	12.8	**3.2(3.5)**	6.4	4.48	3.2	3.2	6.4	4.8	3.2
PE-M30	M30x3.5	9	18	**4.5(5.0)**	9	6.3	4.5	4.5	9	6.75	4.5
PE-M36	M36x4.0	13	26	**7(7.5)**	14	9.8	7	7	14	10.5	7
PE-M42	M42x4.5	15	30	**10(11)**	20	14	10	10	20	15	10
PE-M48	M48x5.0	17	34	**12(13)**	24	16.8	12	12	24	18	12
PE-M56	M56x5.5	26	52	**15(18)**	30	21	15	15	30	22.5	15
PE-M64	M64x6.0	26	52	**15(20)**	30	21	15	15	30	22.5	15
PE-M72	M72x6.0	40	80	**25(25)**	50	35	25	25	50	37.5	25
PE-M80	M80x6.0	43	86	**30(30)**	60	42	30	30	60	45	30
PE-M90	M90x6.0	50	100	**35(35)**	70	49	35	35	70	52.5	35
PE-M100	M100x6.0	50	100	**40(40)**	80	56	40	40	80	60	40

Load Table with Different Lifting Methods

PE-U5/16	UNC5/16-18	0.6	1.2	**0.3(0.4)**	0.6	0.4	0.3	0.3	0.6	0.4	0.3
PE-U3/8	UNC3/8-16	0.9	1.8	**0.45(0.6)**	0.9	0.6	0.45	0.45	0.9	0.6	0.45
PE-U1/2	UNC1/2-13	1.1	2.2	**0.55(0.8)**	1.1	0.8	0.55	0.55	1.1	0.8	0.55
PE-U5/8	UNC5/8-11	2.4	4.8	**1.2(1.5)**	2.4	1.7	1.2	1.2	2.5	1.7	1.2
PE-U3/4	UNC3/4-10	3.8	7.6	**1.9(2.1)**	3.8	2.7	1.9	1.9	4.0	2.8	1.9
PE-U7/8	UNC7/8-9	6	12	**3(3.2)**	6	4.2	3	3	6.3	4.4	3
PE-U1"	UNC1"-8	6.4	12.8	**3.2(3.5)**	6.4	4.5	3.2	3.2	6.7	4.7	3.2
PE-U1 1/4	UNC1 1/4-7	9	18	**4.5(5.0)**	9	6.3	4.5	4.5	9.5	6.7	4.5
PE-U1 1/2	UNC1 1/2-6	13	26	**7(7.5)**	14	9.8	7	7	14.7	10.5	7
PE-U1 3/4	UNC1 3/4-5	15	30	**10(11)**	20	14.0	10	10	21.0	15.0	10
PE-U2"	UNC2"-4 1/2	17	34	**12(13)**	24	16.8	12	12	25.2	18.0	12
PE-U2 1/2	UNC2 1/2-4	26	52	**15(20)**	30	21.0	15	15	31.5	22.5	15

⚠ WARNING

NEVER EXCEED PUBLISHED WOKING LOAD LIMIT.

YTJ Universal Swivel Lifting Eyebolts

Manufacture and test criteria：
EN ISO 12100:2010,EN ISO 3266:2010+A1:2015,EN 1677–1:2000+A1:2008
Patent No.:ZL 2019 3 0600611.3

Manufacturing process: high-strength alloy steel - forging forming - normalizing - rough machining - quenching and tempering - precision machining - surface finish

Drawing / Product specification

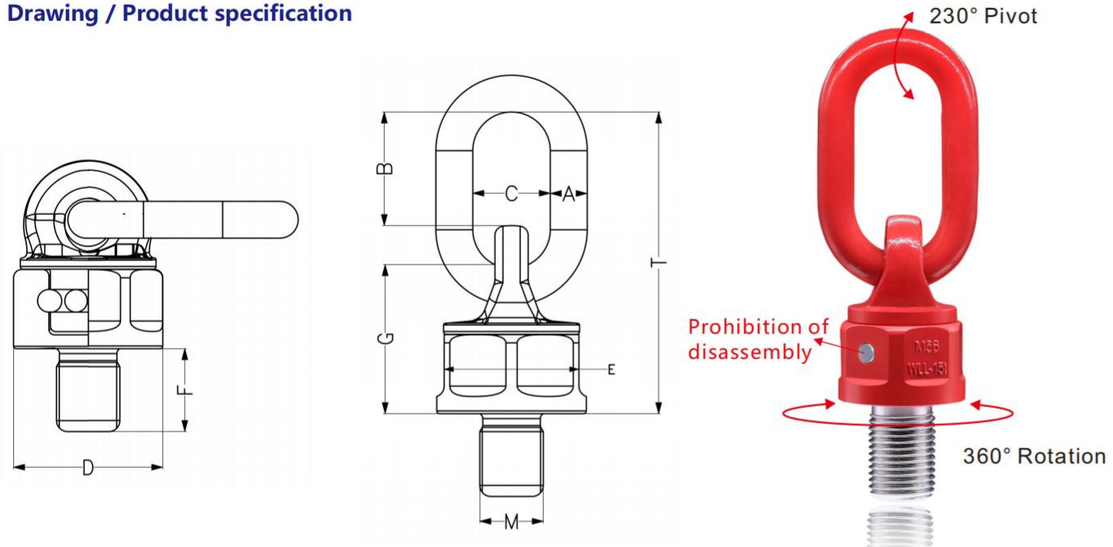

Metric Thread(YTJ)

Model	M	A±1	B±5	C±3	D±0.5	E±1	F±0.2	G±2	T±5	Weight (KG)	Torque (Nm)
YTJ-M8	M8x1.25	13	44	31	38	36	13	44	96	0.47	10
YTJ-M10	M10x1.5	13	44	31	38	36	17	44	96	0.48	10
YTJ-M12	M12x1.75	13	44	31	38	36	21	44	96	0.49	10
YTJ-M14	M14x2.0	13	44	31	38	36	24	44	96	0.5	30
YTJ-M16	M16x2.0	13	44	31	38	36	27	44	96	0.51	30
YTJ-M20	M20x2.5	18	68	42	60	55	33	62	147	1.59	70
YTJ-M24	M24x3.0	18	68	42	60	55	40	62	147	1.66	150
YTJ-M30	M30x3.5	22	97	52	70	65	50	78	193	2.95	350
YTJ-M36	M36x4.0	26	83	52	81	76	54	90	198	4.48	410
YTJ-M42	M42x4.5	26	111	63	93	86	63	96	235	6.11	550
YTJ-M48	M48x5.0	26	111	63	93	86	68	96	235	6.24	550
YTJ-M56	M56x5.5	32	126	70	105	96	84	123	277	10.1	800
YTJ-M64	M64x6.0	32	126	70	105	96	94	123	277	10.7	800
YTJ-M72	M72x6.0	45	140	90	145	130	108	163	342	24.7	1200
YTJ-M80	M80x6.0	45	140	90	145	130	120	163	342	26.5	1200
YTJ-M90	M90x6.0	45	140	90	158	142	135	174	342	28.7	1200
YTJ-M100	M100x6.0	45	140	90	158	142	135	174	342	30	1200

UNC Thread(YTJ)

Model	M	A±1	B±5	C±3	D±0.5	E±1	F±0.2	G±2	T±5	Weight (KG)	Torque (Nm)
YTJ-U5/16	UNC5/16-18	13	44	31	38	36	13	44	96	0.45	10
YTJ-U3/8	UNC3/8-16	13	44	31	38	36	17	44	96	0.45	10
YTJ-U1/2	UNC1/2-13	13	44	31	38	36	21	44	96	0.46	10
YTJ-U5/8	UNC5/8-11	13	44	31	38	36	27	44	96	0.51	30
YTJ-U3/4	UNC3/4-10	18	68	42	60	55	33	62	147	1.59	70
YTJ-U7/8	UNC7/8-9	18	68	42	60	55	40	62	147	1.66	150
YTJ-U1"	UNC1"-8	18	68	42	60	55	40	62	147	1.75	150
YTJ-U1 1/4	UNC1 1/4-7	22	97	52	70	65	50	78	193	3.8	350
YTJ-U1 1/2	UNC1 1/2-6	26	83	52	81	76	54	90	198	4.5	410
YTJ-U1 3/4	UNC1 3/4-5	26	111	63	93	86	63	96	235	6	550
YTJ-U2"	UNC2"-4 1/2	26	111	63	93	86	68	96	235	6.2	550
YTJ-U2 1/2	UNC2 1/2-4	32	126	70	105	96	94	123	277	10.7	800

Product Features:

- Unique ball bearing design,suitable for 360°rotation and 230°pivot. Safety factor 4:1 is guaranteed in all permitted load direction.
- Forged from high-strength Cr-Mo alloy steel,quenched and tempered to ensure sufficient strength and toughness.
- Manufactured and tested in accordance with the relevant standards of EU specification EN1677-1;certified with EuroCert CE.
- All products can be traced for quality through production and testing records.
- Metric threads meet DIN EN 13 (M-6g),UNC threads comply with ASME/ANSI B18.3.1M (UNC-2A).100% go-no go tested, with a 6g outer diameter tolerance grade.
- 100% magnetic particle inspected to ensure zero cracks.
- Dynamic fatigue rated to 20,000 cycles at 1.5 times the WLL.
- Easy to attach or dismantle due to the hexagonal design.

Eyebolt Operation:

- Ensure the tapped hole has sufficient threaded length to engage the eyebolt shank fully.
- The eyebolt must be mounted vertically on flat support surface and fully seated. (For a single lifting simply with a proper wrench or handle to manually tighten the bolts;If the lifting point will be permanently installed,a tool may be employed to lock in place with the specified torque).
- The minimum rated load can be used at full load in all permitted directions.Max rated load (show in parentheses) serves as the max working load when lifting vertically.
- The eyebolt can rotate under rated load,but not suitable for continual rotation under full load in 90° direction.
- Read the Use and Maintenance Manual carefully before use and strictly follow.

Periodic Inspection:

- In-service eyebolts are required to be inspected quarterly by company's internal personnel and record the inspection results.
- In-service eyebolts shall receive annual inspection by manufacturer or a competent third body.

Load Table with Different Lifting Methods

Lifting method											
Number of lifting points		1	2	1	2	2	2	2	3-4	3-4	3-4
Lifting angle		0°	0°	90°	90°	≤90°	90–120°	≤90°	≤90°	90–120°	≤90°
Model	Thread	Working Load Limit (WLL) t									
YTJ-M8	M8x1.25	0.6	1.2	**0.3(0.4)**	0.6	0.4	0.3	0.3	0.6	0.4	0.3
YTJ-M10	M10x1.5	0.9	1.8	**0.45(0.6)**	0.9	0.6	0.4	0.4	0.9	0.6	0.4
YTJ-M12	M12x1.75	1.1	2.2	**0.55(0.8)**	1.1	0.77	0.55	0.55	1.1	0.83	0.55
YTJ-M14	M14x2.0	2	4	**1(1.0)**	2	1.4	1	1	2	1.5	1
YTJ-M16	M16x2.0	2.4	4.8	**1.2(1.5)**	2.4	1.68	1.2	1.2	2.4	1.8	1.2
YTJ-M20	M20x2.5	3.8	7.6	**1.9(2.1)**	3.8	2.66	1.9	1.9	3.8	2.85	1.9
YTJ-M24	M24x3.0	6.4	12.8	**3.2(3.5)**	6.4	4.48	3.2	3.2	6.4	4.8	3.2
YTJ-M30	M30x3.5	9	18	**4.5(5.0)**	9	6.3	4.5	4.5	9	6.75	4.5
YTJ-M36	M36x4.0	13	26	**7(7.5)**	14	9.8	7	7	14	10.5	7
YTJ-M42	M42x4.5	15	30	**10(11)**	20	14	10	10	20	15	10
YTJ-M48	M48x5.0	17	34	**12(13)**	24	16.8	12	12	24	18	12
YTJ-M56	M56x5.5	26	52	**15(18)**	30	21	15	15	30	22.5	15
YTJ-M64	M64x6.0	26	52	**15(20)**	30	21	15	15	30	22.5	15
YTJ-M72	M72x6.0	40	80	**25(25)**	50	35	25	25	50	37.5	25
YTJ-M80	M80x6.0	43	86	**30(30)**	60	42	30	30	60	45	30
YTJ-M90	M90x6.0	45	90	**35(35)**	70	49	35	35	70	52.5	35
YTJ-M100	M100x6.0	50	100	**40(40)**	80	56	40	40	80	60	40

Load Table with Different Lifting Methods

YTJ-U5/16	UNC5/16-18	0.6	1.2	**0.3(0.4)**	0.6	0.4	0.3	0.3	0.6	0.4	0.3
YTJ-U3/8	UNC3/8-16	0.9	1.8	**0.45(0.6)**	0.9	0.6	0.45	0.45	0.9	0.6	0.45
YTJ-U1/2	UNC1/2-13	1.1	2.2	**0.55(0.8)**	1.1	0.77	0.55	0.55	1.1	0.8	0.55
YTJ-U5/8	UNC5/8-11	2.4	4.8	**1.2(1.5)**	2.4	1.68	1.2	1.2	2.4	1.7	1.2
YTJ-U3/4	UNC3/4-10	3.8	7.6	**1.9(2.1)**	3.8	2.66	1.9	1.9	3.8	2.8	1.9
YTJ-U7/8	UNC7/8-9	6	12	**3(3.2)**	6	4.2	3	3	6	4.4	3
YTJ-U1"	UNC1"-8	6.4	12.8	**3.2(3.5)**	6.4	4.5	3.2	3.2	6.4	4.7	3.2
YTJ-U1 1/4	UNC1 1/4-7	9	18	**4.5(5.0)**	9	6.3	4.5	4.5	9	6.7	4.5
YTJ-U1 1/2	UNC1 1/2-6	13	26	**7(7.5)**	14	9.8	7	7	14.7	10.5	7
YTJ-U1 3/4	UNC1 3/4-5	15	30	**10(11)**	20	14.0	10	10	21.0	15.0	10
YTJ-U2"	UNC2"-4 1/2	17	34	**12(13)**	24	16.8	12	12	25.2	18.0	12
YTJ-U2 1/2	UNC2 1/2-4	26	52	**15(20)**	30	21.0	15	15	31.5	22.5	15

⚠ WARNING

NEVER EXCEED PUBLISHED WOKING LOAD LIMIT.

PDSS Universal Swivel Lifting Eyebolts

Manufacture and test criteria：
EN ISO 12100:2010,EN ISO 3266:2010+A1:2015
Patent No.:ZL 2021 3 0053172.6　ZL 2021 2 0159089.1

Manufacturing process: high-strength alloy steel - forging forming - rough machining - quenching and tempering - precision machining - surface finish

Drawing / Product specification

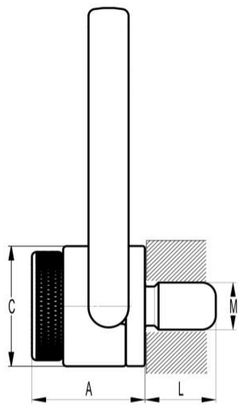

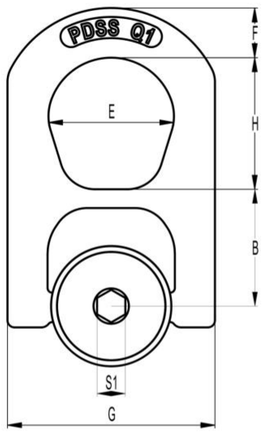



Bolts lengths are available on request

Metric Thread(PDSS)

Model	D	L±0.2	S1+0.3	A±1	B±1	C±0.5	H±1	E±1	F±1	G±1	Weight (KG)	Torque (Nm)
PDSS-M8	M8x1.25	14	8	34	34.5	33	38	35	13	57	0.39	10
PDSS-M10	M10x1.5	17	8	34	34.5	33	38	35	13	57	0.4	10
PDSS-M12	M12x1.75	21	8	34	34.5	33	38	35	13	57	0.4	10
PDSS-M14	M14x2.0	24	12	48	50	51	56	53	21	88	1.35	30
PDSS-M16	M16x2.0	27	12	48	50	51	56	53	21	88	1.36	30
PDSS-M18	M18x2.5	27	12	48	50	51	56	53	21	88	1.4	70
PDSS-M20	M20x2.0	30	12	48	50	51	56	53	21	88	1.41	70
PDSS-M20	M20x2.5	30	12	48	50	51	56	53	21	88	1.41	70
PDSS-M22	M22x2.5	33	12	61.5	64	71	66	74	28	120	3.3	150
PDSS-M24	M24x2.0	36	12	61.5	64	71	66	74	28	120	3.35	150
PDSS-M24	M24x3.0	36	12	61.5	64	71	66	74	28	120	3.35	150

UNC Thread(PDSS)

Model	D	L±0.2	S1+0.3	A±1	B±1	C±0.5	H±1	E±1	F±1	G±1	Weight (KG)	Torque (Nm)
PDSS-U5/16	UNC5/16-18	14	8	34	34.5	33	38	35	13	57	0.39	10
PDSS-U3/8	UNC3/8-16	17	8	34	34.5	33	38	35	13	57	0.4	10
PDSS-U1/2	UNC1/2-13	21	8	34	34.5	33	38	35	13	57	0.4	10
PDSS-U5/8	UNC5/8-11	24	12	48	50	51	56	53	21	88	1.39	30
PDSS-U3/4	UNC3/4-10	30	12	48	50	51	56	53	21	88	1.41	70
PDSS-U7/8	UNC7/8-9	33	12	61.5	64	71	66	74	28	120	3.37	150
PDSS-U1*	UNC1*-8	36	12	61.5	64	71	66	74	28	120	3.37	150

Product Features:

- Unique ball bearing design,suitable for 360°rotation and 180°pivot. Safety factor 4:1 is guaranteed in all permitted load direction.
- Forged from high-strength Cr-Mo alloy steel,quenched and tempered to ensure sufficient strength and toughness.
- Manufactured and tested in accordance with the relevant standards of EU specification EN1677-1;certified with EuroCert CE.
- All products can be traced for quality through production and testing records.
- Metric threads meet DIN EN 13 (M-6g),UNC threads comply with ASME/ANSI B18.3.1M (UNC-2A).100% go-no go tested, with a 6g outer diameter tolerance grade.
- 100% magnetic particle inspected to ensure zero cracks.
- Dynamic fatigue rated to 20,000 cycles at 1.5 times the WLL.
- Adjustable to the direction of pull. Easy to attach or dismantle due to the hexagonal design.
- Unique item number facilitates easy use,safety records and traceability.

Eyebolt Operation:

- Ensure the tapped hole has sufficient threaded length to engage the eyebolt shank fully.
- The eyebolt must be mounted vertically on flat support surface and fully seated.
- The minimum rated load can be used at full load in all permitted directions. The max. working load can be reached when lifting vertically..
- Read the Use and Maintenance Manual carefully before use and strictly follow.

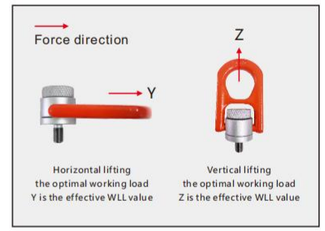

Periodic Inspection:

- In-service eyebolts are required to be inspected quarterly by company's internal personnel and record the inspection results.
- In-service eyebolts shall receive annual inspection by manufacturer or a competent third body.

Load Table with Different Lifting Methods

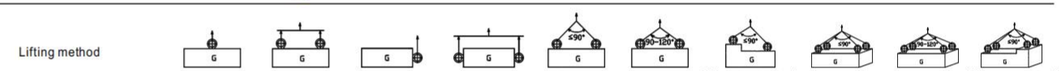

Number of lifting points		1	2	1	2	2	2	2	3-4	3-4	3-4
Lifting angle		0°	0°	90°	90°	≤90°	90–120°	≤90°	≤90°	90–120°	≤90°
Model	Thread	Working Load Limit (WLL) t									
PDSS-M8	M8x1.25	0.8	1.6	**0.5**	1	0.7	0.5	0.5	1.05	0.5	0.5
PDSS-M10	M10x1.5	1.2	2.4	**0.7**	1.4	0.98	0.7	0.7	1.47	0.7	0.7
PDSS-M12	M12x1.75	1.2	2.4	**1**	2	1.4	1	1	2.1	1	1
PDSS-M14	M14x2.0	2.4	4.8	**1.5**	3	2.1	1.5	1.5	3.15	1.5	1.5
PDSS-M16	M16x2.0	3	6	**2**	4	2.8	2	2.5	4.2	2	2
PDSS-M18	M18x2.5	3	6	**2.5**	5	3.5	2.5	2.5	5.25	2.5	2.5
PDSS-M20	M20x2.5	3	6	**2.5**	5	3.5	2.5	2.5	5.25	2.5	2.5
PDSS-M20	M20x2.0	3	6	**2.5**	5	3.5	2.5	3.5	5.25	2.5	2.5
PDSS-M22	M22x2.5	6.5	13	**3.5**	7	4.9	3.5	4.5	7.35	3.5	3.5
PDSS-M24	M24x3.0	7	14	**4.5**	9	6.3	4.5	4.5	9.45	4.5	4.5
PDSS-M24	M24x2.0	4.5	9	**4.5**	9	6.3	4.5	4.5	9.45	4.5	4.5

Load Table with Different Lifting Methods

PDSS-U5/16	UNC5/16-18	0.8	1.6	**0.5**	1	0.7	0.5	0.5	1.05	0.5	0.5
PDSS-U3/8	UNC3/8-16	1.2	2.4	**0.7**	1.4	0.98	0.7	0.7	1.47	0.7	0.7
PDSS-U1/2	UNC1/2-13	1.2	2.4	**1**	2	1.4	1	1	2.1	1	1
PDSS-U5/8	UNC5/8-11	2.4	4.8	**2**	4	2.8	2	2	4.2	2	2
PDSS-U3/4	UNC3/4-10	3	6	**2.5**	5	3.5	2.5	2.5	5.25	2.5	2.5
PDSS-U7/8	UNC7/8-9	6.5	13	**3.5**	7	4.9	3.5	3.5	7.35	3.5	3.5
PDSS-U1*	UNC1*-8	7	14	**4.5**	9	6.3	4.5	4.5	9.45	4.5	4.5

⚠ WARNING
NEVER EXCEED PUBLISHED WOKING LOAD LIMIT.

PDSS Universal Swivel Lifting Eyebolts

Manufacture and test criteria：
EN ISO 12100:2010,EN ISO 3266:2010+A1:2015
Patent No.:ZL 2021 3 0053171.1　ZL 2021 2 0159114.6

Manufacturing process: high-strength alloy steel - forging forming - rough machining - quenching and tempering - precision machining - surface finish

Drawing / Product specification

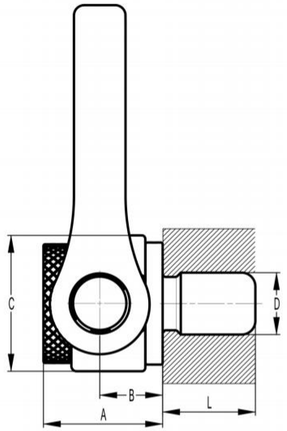

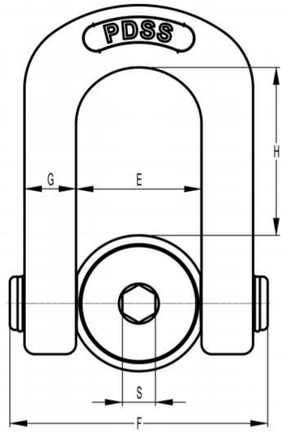



Bolts lengths are available on request

Metric Thread(PDSS)

Model	D	L±0.2	S+0.3	A±1	B±1	C±0.5	E±1	F±0.5	G±1	H±2	Weight (KG)	Torque (Nm)
PDSS-M27	M27x3.0	40	19	69	33	79	73	147	30	100	5.7	350
PDSS-M30	M30x3.5	50	19	69	33	79	73	147	30	100	5.95	350
PDSS-M33	M33x3.5	50	19	69	33	79	73	147	30	100	6	410
PDSS-M36	M36x4.0	54	19	69	33	79	73	147	30	100	6.02	410
PDSS-M39	M39x4.0	54	19	69	33	79	73	147	30	100	6.15	550
PDSS-M42	M42x4.5	63	19	69	33	79	73	147	30	100	6.3	550
PDSS-M45	M45x4.5	68	19	87	42	104	93	182	36	120	11.99	550
PDSS-M48	M48x5.0	68	19	87	42	104	93	182	36	120	11.99	550
PDSS-M52	M52x5.0	68	19	87	42	104	93	182	36	120	12.4	800
PDSS-M56	M56x5.5	84	19	87	42	104	93	182	36	120	12.42	800
PDSS-M60	M60x5.5	84	19	87	42	104	93	182	36	120	12.97	800
PDSS-M64	M64x6.0	90	19	87	42	104	93	182	36	120	13.25	800
PDSS-M72	M72x6.0	110	27	144	69	142	148	278	58	186	50.5	1200
PDSS-M80	M80x6.0	120	27	144	69	142	148	278	58	186	51.77	1200
PDSS-M90	M90x6.0	135	27	144	69	142	148	278	58	186	52.77	1200
PDSS-M100	M100x6.0	150	27	144	69	142	148	278	58	186	55.3	1200

UNC Thread(PDSS)

Model	D	L±0.2	S+0.3	A±1	B±1	C±0.5	E±1	F±0.5	G±1	H±2	Weight (KG)	Torque (Nm)
PDSS-U1 1/4	UNC1 1/4-7	50	19	69	33	79	73	147	30	100	6.05	350
PDSS-U1 1/2	UNC1 1/2-6	61	19	69	33	79	73	147	30	100	6.1	410
PDSS-U1 3/4	UNC1 3/4-5	68	19	87	42	104	93	182	36	120	11.99	550
PDSS-U2"	UNC2"-4 1/2	76	19	87	42	104	93	182	36	120	12	550
PDSS-U2 1/2	UNC2 1/2-4	90	19	87	42	104	93	182	36	120	13.3	800

Product Features:

- Unique ball bearing design,suitable for 360°rotation and 180°pivot. Safety factor 4:1 is guaranteed in all permitted load direction.
- Forged from high-strength Cr-Mo alloy steel,quenched and tempered to ensure sufficient strength and toughness.
- Manufactured and tested in accordance with the relevant standards of EU specification EN1677-1;certified with EuroCert CE.
- All products can be traced for quality through production and testing records.
- Metric threads meet DIN EN 13 (M-6g),UNC threads comply with ASME/ANSI B18.3.1M (UNC-2A).100% go-no go tested, with a 6g outer diameter tolerance grade.
- 100% magnetic particle inspected to ensure zero cracks.
- Dynamic fatigue rated to 20,000 cycles at 1.5 times the WLL.
- Adjustable to the direction of pull. Easy to attach or dismantle due to the hexagonal design.
- Unique item number facilitates easy use,safety records and traceability.

Eyebolt Operation:

- Ensure the tapped hole has sufficient threaded length to engage the eyebolt shank fully.
- The eyebolt must be mounted vertically on flat support surface and fully seated.
- The minimum rated load can be used at full load in all permitted directions. The max. working load can be reached when lifting vertically..
- Read the Use and Maintenance Manual carefully before use and strictly follow.

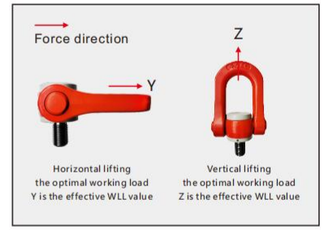

Periodic Inspection:

- In-service eyebolts are required to be inspected quarterly by company's internal personnel and record the inspection results.
- In-service eyebolts shall receive annual inspection by manufacturer or a competent third body.

Load Table with Different Lifting Methods

Lifting method								(Unsymmetry)			(Unsymmetry)
Number of lifting points		1	2	1	2	2	2	2	3-4	3-4	3-4
Lifting angle		0°	0°	90°	90°	≤90°	90–120°	≤90°	≤90°	90–120°	≤90°
Model	Thread	Working Load Limit (WLL) t									
PDSS-M27	M27x3.0	9	18	**5.6**	11.2	7.84	5.6	5.6	11.76	5.6	5.6
PDSS-M30	M30x3.5	12	24	**7.8**	15.6	10.92	7.8	7.8	16.38	7.8	7.8
PDSS-M33	M33x3.5	14.5	29	**9**	18	12.6	9	9	18.9	9	9
PDSS-M36	M36x4.0	15	30	**12**	24	16.8	12	12	25.2	12	12
PDSS-M39	M39x4.0	17	34	**14**	28	19.6	14	14	29.4	14	14
PDSS-M42	M42x4.5	19	38	**15**	30	21	15	15	31.5	15	15
PDSS-M45	M45x4.5	20	40	**16**	32	22.4	16	16	33.6	16	15
PDSS-M48	M48x5.0	25	50	**20**	40	28	20	20	42	20	20
PDSS-M52	M52x5.0	26	52	**21**	42	29.4	21	21	44.1	21	21
PDSS-M56	M56x5.5	30	60	**25**	50	35	25	25	52.5	25	25
PDSS-M60	M60x5.5	30	60	**25**	50	35	25	25	52.5	25	25
PDSS-M64	M64x6.0	35	70	**32**	64	44.8	32	32	67.2	32	32
PDSS-M72	M72x6.0	50	100	**38**	76	53..2	38	38	79.8	38	38
PDSS-M80	M80x6.0	55	110	**45**	90	63	45	45	94.5	45	45
PDSS-M90	M90x6.0	55	110	**50**	100	70	50	50	105	50	50
PDSS-M100	M100x6.0	60	120	**60**	120	84	60	60	126	60	60

Load Table with Different Lifting Methods

PDSS-U1 1/4	UNC1 1/4-7	12	24	**8**	16	11.2	8	8	16.8	8	8
PDSS-U1 1/2	UNC1 1/2-6	15	30	**12**	24	16.8	12	12	25.2	10	12
PDSS-U1 3/4	UNC1 3/4-5	19	38	**15**	30	21	15	15	31.5	15	15
PDSS-U2"	UNC2"-4 1/2	25	50	**20**	40	28	20	20	42	20	20
PDSS-U2 1/2	UNC2 1/2-4	35	70	**32**	64	44.8	32	32	67.2	32	32

⚠ WARNING

NEVER EXCEED PUBLISHED WOKING LOAD LIMIT.

CX Lateral Swivel Lifting Eyebolts

Manufacture and test criteria：
EN ISO 12100:2010,EN ISO 3266:2010+A1:2015
Patent No.:ZL 2022 3 0520978.6　ZL 2022 2 2392142.X

Manufacturing process: high-strength alloy steel - forging forming - normalizing - rough machining - quenching and tempering - precision machining - surface finish

Drawing / Product specification

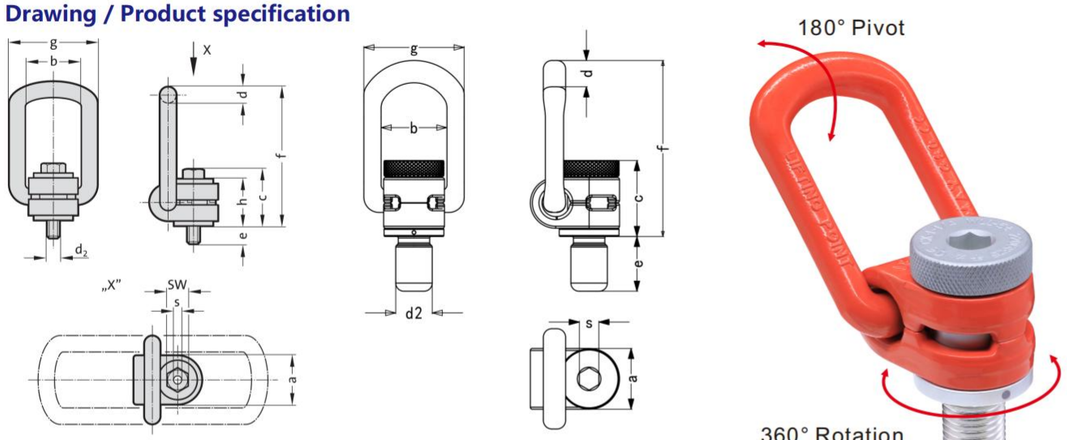

Bolts lengths are available on request

Metric Thread(CX)

Model	Load(t)	d_2	e±0.2	g±1	a±1	b±1	c±1	d±1	f±5	h±1	s+0.3	sw	Torque (Nm)	Weight (KG)
CX-M8	0.3	M8×1.25	11	57	33	37	45.7	14	99	36.7	8	18	10	0.48
CX-M10	0.63	M10×1.5	16	57	33	37	45.7	14	99	36.7	8	18	10	0.48
CX-M12	1	M12×1.75	18	57	33	37	45.7	14	100	36.7	8	18	10	0.55
CX-M14	1.2	M14×2.0	24	57	33	37	45.7	14	100	36.7	12	29.5	30	0.56
CX-M16	1.5	M16×2.0	27	57	33	37	45.7	14	100	36.7	12	29.5	30	0.57
CX-M18	2	M18×2.5	27	82	50	54	58.2	17	143	47	12	35.6	70	1.3
CX-M20	2.5	M20×2.5	30	82	50	54	58.2	17	143	47	12	35.6	70	1.37
CX-M24	4	M24×3.0	36	82	50	54	58.2	17	143	47	12	35.6	150	1.43
CX-M27	4	M27×3.0	38	99	60	65	72.7	23	171		19		350	2.8
CX-M30	5	M30×3.5	48	99	60	65	72.7	23	171		19		350	2.81
CX-M36	7	M36×4.0	54	99	60	65	72.7	23	171		19		410	3
CX-M36-Z	8	M36×4.0	62	124	77	85	84.2	27	225		19		410	5.5
CX-M42	10	M42×4.5	63	124	77	85	84.2	27	225		19		550	5.7
CX-M42-Z	15	M42×4.5	72	158	95	104	103	36	260		19		550	11
CX-M48	20	M48×5.0	72	158	95	104	103	36	260		19		550	11.28
CX-M52	22	M52x5.0	78	158	95	104	103	36	260		19		800	
CX-M56	24	M56x5.5	84	158	95	104	103	36	260		19		800	
CX-M64	25	M64x6.0	94	158	95	104	103	36	260		19		800	

UNC Thread(CX)

Model	Load(t)	d_2	e±0.2	g±1	a±1	b±1	c±1	d±1	f±5	h±1	s+0.3	sw	Torque (Nm)	Weight (KG)
CX-5/16	0.3	UNC-5/16-18	11	57	33	37	45.7	14	99	36.7	8	18	10	0.48
CX-3/8	0.63	UNC-3/8-16	16	57	33	37	45.7	14	99	36.7	8	18	10	0.48
CX-7/16	1	UNC-7/16-14	21	57	33	37	45.7	14	100	36.7	8	18	10	0.55
CX-1/2	1	UNC-1/2-13	21	57	33	37	45.7	14	100	36.7	8	18	10	0.56
CX-5/8	1.5	UNC-5/8-11	24	57	33	37	45.7	14	100	36.7	12	29.5	30	0.57
CX-3/4	2.5	UNC-3/4-10	30	82	50	54	58.2	17	143	47	12	35.6	70	1.3
CX-7/8	2.5	UNC-7/8-9	30	82	50	54	58.2	17	143	47	12	35.6	150	1.37
CX-1"	4	UNC-1"-8	36	82	50	54	58.2	17	143	47	12	35.6	150	1.43
CX-1 1/4	5	UNC-1 1/4-7	48	99	60	65	72.7	23	171		19		350	2.8
CX-1 1/2	8	UNC-1 1/2-6	62	124	77	85	84.2	27	225		19		410	3
CX-1 3/4	15	UNC-1 3/4-5	72	158	95	104	103	36	225		19		550	5.7
CX-2"	20	UNC-2"-4 1/2	72	158	95	104	103	36	260		19		550	11.3
CX-2 1/2"	25	UNC-2 1/2-4	94	158	95	104	103	36	260		19		800	

Product Features:

- Unique ball bearing design,suitable for 360°rotation and 180°pivot. Safety factor 4:1 is guaranteed in all permitted load direction.
- Forged from high-strength Cr-Mo alloy steel,quenched and tempered to ensure sufficient strength and toughness.
- Manufactured and tested in accordance with the relevant standards of EU specification EN1677-1;certified with EuroCert CE.
- All products can be traced for quality through production and testing records.
- Metric threads meet DIN EN 13 (M-6g),UNC threads comply with ASME/ANSI B18.3.1M (UNC-2A).100% go-no go tested, with a 6g outer diameter tolerance grade.
- 100% magnetic particle inspected to ensure zero cracks.
- Dynamic fatigue rated to 20,000 cycles at 1.5 times the WLL.
- Unique item number facilitates easy use,safety records and traceability.

Eyebolt Operation:

- Ensure the tapped hole has sufficient threaded length to engage the eyebolt shank fully.
- The eyebolt must be mounted vertically on flat support surface and fully seated.
- The minimum rated load can be used at full load in all permitted directions.
  The max. working load can be reached when lifting laterally.
- Read the Use and Maintenance Manual carefully before use and strictly follow.

Periodic Inspection:

- In-service eyebolts are required to be inspected quarterly by company's internal personnel and record the inspection results.
- In-service eyebolts shall receive annual inspection by manufacturer or a competent third body.

Load Table with Different Lifting Methods

Lifting method									
									(Unsymmetry)
Number of lifting points		1	2	2	2	3-4	3-4	2	3-4
Lifting angle		90°	≤90°	≤90°	90–120°	≤90°	90–120°	≤90°	≤90°
Model	Thread	Working Load Limit (WLL) t							
CX-M8	M8×1.25	**0.3**	0.6	0.42	0.3	0.63	0.45	0.3	0.3
CX-M10	M10×1.5	**0.63**	1.26	0.88	0.63	1.32	0.95	0.63	0.63
CX-M12	M12×1.75	**1**	2	1.4	1	2.1	1.5	1	1
CX-M14	M14×2.0	**1.2**	2.4	1.7	1.2	2.5	1.8	1.2	1.2
CX-M16	M16×2.0	**1.5**	3	2.1	1.5	3.1	2.2	1.5	1.5
CX-M18	M18×2.5	**2**	4	2.8	2	4.2	3	2	2
CX-M20	M20×2.5	**2.5**	5	3.5	2.5	5.2	3.7	2.5	2.5
CX-M24	M24×3.0	**4**	8	5.6	4	8.4	6	4	4
CX-M27	M27×3.0	**4**	8	5.6	4	8.4	6	4	4
CX-M30	M30×3.5	**5**	10	7	5	10.5	7.5	5	5
CX-M36	M36×4.0	**7**	14	9.8	7	14.7	10.5	7	7
CX-M36-Z	M36×4.0	**8**	16	11.2	8	16.8	12	8	8
CX-M42	M42×4.5	**10**	20	14	10	21	15	10	10
CX-M42-Z	M42×4.5	**15**	30	21	15	31.5	22.5	15	15
CX-M48	M48×5.0	**20**	40	28	20	42	30	20	20
CX-M52	M52x5.0	**22**	44	30.8	22	46.2	33	22	22
CX-M56	M56x5.5	**24**	48	33.6	24	50.4	36	24	24
CX-M64	M64x6.0	**25**	50	35	25	52.5	37.5	25	25

Note: The maximum conveying weight "G" unit "t" depends on different lifting methods.

Load Table with Different Lifting Methods

CX-5/16	UNC-5/16-18	**0.3**	0.6	0.42	0.3	0.63	0.45	0.3	0.3
CX-3/8	UNC-3/8-16	**0.63**	1.26	0.88	0.63	1.32	0.95	0.63	0.63
CX-7/16	UNC-7/16-14	**1**	2	1.4	1	2.1	1.5	1	1
CX-1/2	UNC-1/2-13	**1**	2	1.4	1	2.1	1.5	1	1
CX-5/8	UNC-5/8-11	**1.5**	3	2.1	1.5	3.1	2.2	1.5	1.5
CX-3/4	UNC-3/4-10	**2.5**	5	3.5	2.5	5.2	3.7	2.5	2.5
CX-7/8	UNC-7/8-9	**2.5**	5	3.5	2.5	5.2	3.7	2.5	2.5
CX-1"	UNC-1"-8	**4**	8	5.6	4	8.4	6	4	4
CX-1 1/4	UNC-1 1/4-7	**5**	10	7	5	10.5	7.5	5	5
CX-1 1/2	UNC-1 1/2-6	**8**	16	11.2	8	16.8	12	8	8
CX-1 3/4	UNC-1 3/4-5	**15**	30	21	15	31.5	22.5	15	15
CX-2"	UNC-2"-4 1/2	**20**	40	28	20	42	30	20	20
CX-2 1/2"	UNC-2 1/2-4	**25**	50	35	25	52.5	37.5	25	25

⚠ WARNING

NEVER EXCEED PUBLISHED WOKING LOAD LIMIT.

PB G100 Swivel Lifting Eyebolts With Key

Manufacture and test criteria：
EN ISO 12100:2010,EN ISO 3266:2010+A1:2015
Patent No.:ZL 2018 2 0036340.3　ZL 2015 3 0461925.1　ZL 2018 2 0035895.6

Manufacturing process: high-strength alloy steel - forging forming - normalizing - rough machining - quenching and tempering - precision machining - surface finish

Drawing / Product specification

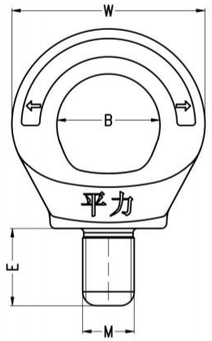

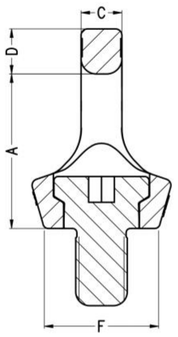



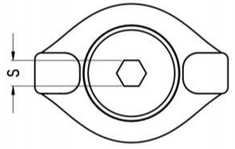

Metric Thread(PB)

Model	M	A±2	B±1.5	C±1	D±1	E±0.2	F±2	W±1	S+0.3	Weight (KG)	Torque (Nm)
PB-M8	M8x1.25	45	30	10	13	13	30	54	8	0.3	10
PB-M10	M10x1.5	45	30	10	13	17	30	54	8	0.3	10
PB-M12	M12x1.75	45	30	10	13	21	30	54	8	0.3	10
PB-M16	M16x2.0	52	35	14	15	27	40	65	8	0.55	30
PB-M20	M20x2.5	60	40	16	17	30	46	75	12	0.72	70
PB-M24	M24x3.0	69	48	19	21	36	53	90	12	1.2	150
PB-M30	M30x3.5	92	60	24	26	45	64	100	17	2.26	350
PB-M36	M36x4.0	103	72	29	32	54	75	135	17	3.87	410
PB-M42	M42x4.5	127	82	34	38	63	90	158	24	6.35	550
PB-M48	M48x5.0	139	94	38	43	68	100	180	24	9.77	550

UNC Thread(PB)

Model	M	A±2	B±1.5	C±1	D±1	E±0.2	F±2	W±1	S+0.3	Weight (KG)	Torque (Nm)
PB-U5/16	UNC5/16-18	45	30	10	13	13	30	54	8	0.32	10
PB-U3/8	UNC3/8-16	45	30	10	13	17	30	54	8	0.38	10
PB-U1/2	UNC1/2-13	45	30	10	13	21	30	54	8	0.38	10
PB-U5/8	UNC5/8-11	52	35	14	15	27	40	65	8	0.55	30
PB-U3/4	UNC3/4-10	60	40	16	17	30	46	75	12	0.7	70
PB-U7/8	UNC7/8-9	69	48	19	21	36	53	90	12	1.2	150
PB-U1"	UNC1"-8	69	48	19	21	36	53	90	12	1.2	150
PB-U1 1/4	UNC1 1/4-7	92	60	24	26	45	64	100	17	2.26	350
PB-U1 1/2	UNC1 1/2-6	103	72	29	32	54	75	135	17	3.87	410
PB-U1 3/4	UNC1 3/4-5	127	82	34	38	63	90	158	24	6.35	550
PB-U2"	UNC2"-4 1/2	139	94	38	43	68	100	180	24	9.77	550

Product Features:

- 360°rotation for lifting. Safety factor 4:1 is guaranteed in all load direction.
- Forged from G100 high-strength Cr-Mo alloy steel,quenched and tempered to ensure sufficient strength and toughness.
- Manufactured and tested in accordance with the relevant standards of EU specification EN1677-1;certified with EuroCert CE .
- All products can be traced for quality through production and testing records.
- Metric threads meet DIN EN 13 (M-6g),UNC threads comply with ASME/ANSI B18.3.1M (UNC-2A).100% go-no go tested, with a 6g outer diameter tolerance grade.
- 100% magnetic particle inspected to ensure zero cracks.
- Dynamic fatigue rated to 20,000 cycles at 1.5 times the WLL.
- Supplied with a stopper/ a wrench,quick and simple assembly.
- Unique item number facilitates easy use,safety records and traceability.

Eyebolt Operation:

- Ensure the tapped hole has sufficient threaded length to engage the eyebolt shank fully.
- The eyebolt must be mounted vertically on flat support surface and fully seated.
  (For a single lifting simply with a proper wrench or handle to manually tighten the bolts;If the lifting point will be permanently installed,a tool may be employed to lock in place with the specified torque).
- Read the Use and Maintenance Manual carefully before use and strictly follow.

Periodic Inspection:

- In-service eyebolts are required to be inspected quarterly by company's internal personnel and record the inspection results.
- In-service eyebolts shall receive annual inspection by manufacturer or a competent third body.

Load Table with Different Lifting Methods

Lifting method										
							(Unsymmetry)			(Unsymmetry)
Number of lifting points	1	2	1	2	2	2	2	3-4	3-4	3-4
Lifting angle	0°	0°	90°	90°	≤90°	90–120°	≤90°	≤90°	90–120°	≤90°
Model / Thread	Working Load Limit (WLL) t									
PB-M8 M8x1.25	0.8	1.6	**0.3**	0.6	0.42	0.3	0.3	0.63	0.45	0.3
PB-M10 M10x1.5	1	2	**0.4**	0.8	0.56	0.4	0.4	0.8	0.6	0.4
PB-M12 M12x1.75	2	4	**0.75**	1.5	1	0.7	0.7	1.5	1.3	0.7
PB-M16 M16x2.0	4	8	**1.5**	3	2.1	1.5	1.5	3.1	2.2	1.5
PB-M20 M20x2.5	6	12	**2.3**	4.6	3.2	2.3	2.3	4.8	3.4	2.3
PB-M24 M24x3.0	8	16	**3.2**	6.4	4.5	3.2	3.2	6.7	4.8	3.2
PB-M30 M30x3.5	12	24	**4.5**	9	6.3	4.5	4.5	9.4	6.7	4.5
PB-M36 M36x4.0	16	32	**7**	14	9.8	7	7	14.7	10.5	7
PB-M42 M42x4.5	24	48	**9**	18	12.6	9	9	18.9	13.5	9
PB-M48 M48x5.0	32	64	**12**	24	16.8	12	12	25	18	12

Load Table with Different Lifting Methods

PB-U5/16	UNC5/16-18	0.8	1.6	**0.3**	0.6	0.4	0.3	0.3	0.6	0.5	0.3
PB-U3/8	UNC3/8-16	1	2	**0.4**	0.8	0.6	0.4	0.4	0.8	0.6	0.4
PB-U1/2	UNC1/2-13	2	4	**0.75**	1.5	1.1	0.75	0.75	1.5	1.3	0.75
PB-U5/8	UNC5/8-11	4	8	**1.5**	3	2.1	1.5	1.5	3.2	2.2	1.5
PB-U3/4	UNC3/4-10	6	12	**2.3**	4.6	3.2	2.3	2.3	4.8	3.4	2.3
PB-U7/8	UNC7/8-9	7	14	**3**	6	4.2	3	3	6.3	4.4	3
PB-U1"	UNC1"-8	8	16	**3.2**	6.4	4.5	3.2	3.2	6.7	4.8	3.2
PB-U1 1/4	UNC1 1/4-7	12	24	**4.5**	9	6.3	4.5	4.5	9.5	6.7	4.5
PB-U1 1/2	UNC1 1/2-6	16	32	**7**	14	9.8	7	7	14.7	10.5	7
PB-U1 3/4	UNC1 3/4-5	24	48	**9**	18	12.6	9	9	18.9	13.5	9
PB-U2"	UNC2"-4 1/2	32	64	**12**	24	16.8	12	12	25.2	18.0	12

⚠ WARNING
NEVER EXCEED PUBLISHED WOKING LOAD LIMIT.

PSA Anchor Point for Personal Protective Equipment

Manufacture and test criteria：
EN795/12　CEN/TS 16415：2013　OSHA 1926.502:2010

Manufacturing process: high-strength alloy steel - forging forming - normalizing - rough machining - quenching and tempering - precision machining - surface finish

Drawing / Product specification

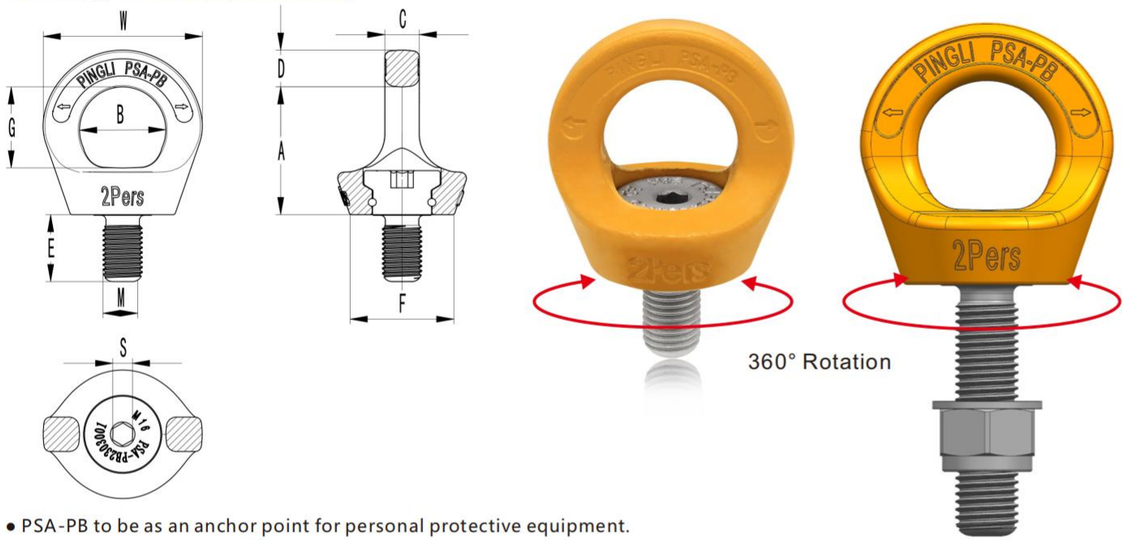

- PSA-PB to be as an anchor point for personal protective equipment.
- Certified with German DGUV test.
- Rotates 360°, adjustable to the direction of pull.
- Forged from G100 grade Cr-Mo alloy steel, quenched and tempered to ensure the strength and toughness.
- Manufactured and tested in compliance with CEN/TS 16415 EN795/12 standards.
- In accordance with EN 365, each eyebolt is clearly marked with the maximum carrying capacity and rated load, suitable for full-load use in all directions.
- Passed 22.2kN/person load testing.
- Load rated parts are 100% crack-tested.
- Color: Traffic yellow for high visiblity.
- Unique item number and identification such as thread specifications facilitate easy use,safety records and traceability.
- Meets all requirements of EU standards EN 795, EN 50308, OSHA1926.502.
- In-service eyebolts are required to be inspected quarterly by company's internal personnel and record the inspection results.
- In-service eyebolts shall receive annual inspection by manufacturer or a competent third body.

Metric dimension chart of PSA-PB

Model	Working Load Limit(t)	Thread Version	Dimension(MM)									Torque	Net Weight
		M	A±2	B±1.5	C±1	D±1	E+0.2	F±2	G±1	S+0.3	W±1	N-m	Kg
PSA-PB-M16	2Pers	M16×2.0	52	35	14	15	27	40	33	8	65	30	0. 50
PSA-PB-M20	2Pers	M20×2.5	60	40	16	17	30	46	37	12	75	70	0. 66

Note: Special specifications of thread length can be customized according to customer requirements, as shown in the picture. (The longest thread length of PSA-PB-M16 is 80mm, and the longest thread length of PSA-PB-M20 is 90mm)

American dimension chart of PSA-PB

Model	Working Load Limit(t)	Thread Version	Dimension(MM)									Torque	Net Weight
		M	A±2	B±1.5	C±1	D±1	E+0.2	F±2	G±1	S+0.3	W±1	N-m	Kg
PSA-PB-U5/8	2Pers	U5/8-11	52	35	14	15	27	40	33	8	65	30	0. 50
PSA-PB-U3/4	2Pers	U3/4-10	60	40	16	17	30	46	37	12	75	70	0. 66

Note: Special specifications of thread length can be customized according to customer requirements, as shown in the picture. (The longest thread length for PSA-PB-U 5/8 is 80mm, and the longest thread length for PSA-PB-U 3/4 is 90mm)

PSA Stainless Steel Anchor Point for Personal Protective Equipment

Manufacture and test criteria：
EN795/12　CEN/TS 16415：2013　OSHA 1926.502:2010

Manufacturing process: S32205 duplex stainless steel - forging forming - rough machining - solution treatment - precision machining - surface treatment

Drawing / Product specification

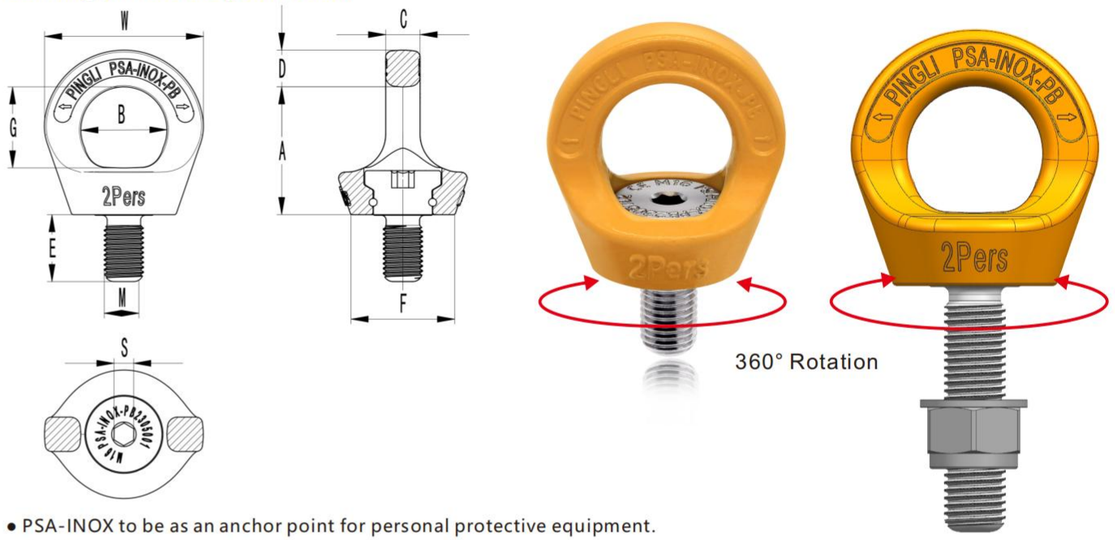

- PSA-INOX to be as an anchor point for personal protective equipment.
- Certified with German DGUV test.
- Rotates 360°, adjustable to the direction of pull.
- Forged from duplex stainless steel.
- Manufactured and tested in compliance with CEN/TS 16415 EN795/12 standards.
- In accordance with EN 365, each eyebolt is clearly marked with the maximum carrying capacity and rated load, suitable for full-load use in all directions.
- Passed 22.2kN/person load testing.
- Load rated parts are 100% crack-tested.
- Color: Traffic yellow for high visiblity.
- Unique item number and identification such as thread specifications facilitate easy use,safety records and traceability.
- Meets all requirements of EU standards EN 795, EN 50308, OSHA1926.502.
- In-service eyebolts are required to be inspected quarterly by company's internal personnel and record the inspection results.
- In-service eyebolts shall receive annual inspection by manufacturer or a competent third body.

Metric dimension chart of PSA-INOX-PB

Stainless Steel

Model	Working Load Limit(t)	Thread Version	Dimension(MM)									Torque	Net Weight
		M	A±2	B±1.5	C±1	D±1	E+0.2	F±2	G±1	S+0.3	W±1	N-m	Kg
PSA-INOX-PB-M16	2Pers	M16×2.0	52	35	14	15	27	40	33	8	65	30	0. 50
PSA-INOX-PB-M20	2Pers	M20×2.5	60	40	16	17	30	46	37	12	75	70	0. 66

Note: Special specifications of thread length can be customized according to customer requirements, as shown in the picture. (The longest thread length of PSA-INOX-PB-M16 is 80mm, and the longest thread length of PSA-INOX-PB-M20 is 90mm)

American dimension chart of PSA-INOX-PB

Stainless Steel

Model	Working Load Limit(t)	Thread Version	Dimension(MM)									Torque	Net Weight
		M	A±2	B±1.5	C±1	D±1	E+0.2	F±2	G±1	S+0.3	W±1	N-m	Kg
PSA-INOX-PB-U5/8	2Pers	U5/8-11	52	35	14	15	27	40	33	8	65	30	0. 50
PSA-INOX-PB-U3/4	2Pers	U3/4-10	60	40	16	17	30	46	37	12	75	70	0. 66

Note: Special specifications of thread length can be customized according to customer requirements, as shown in the picture. (The longest thread length for PSA-INOX-PB-U 5/8 is 80mm, and the longest thread length for PSA-INOX-PB-U 3/4 is 90mm)

⚠ WARNING
NEVER EXCEED PUBLISHED WOKING LOAD LIMIT.

PC G80 Alloy Steel Lifting Eyebolts

Manufacture and test criteria：
EN ISO 12100:2010,EN ISO 3266:2010+A1:2015
Patent No.:ZL 2019 3 0600612.8

Manufacturing process: high-strength alloy steel - forging forming - normalizing - rough machining - quenching and tempering - precision machining - surface finish

Drawing / Product specification

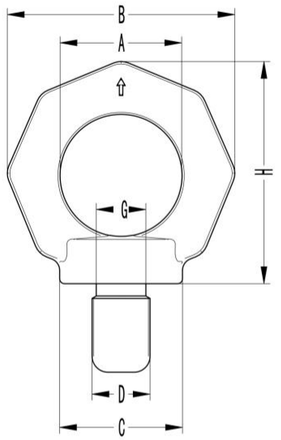

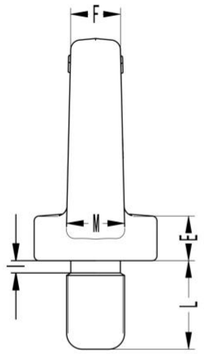



Metric Thread(PC)

Model	D	A	B	C	E	F	M	G±0. 1	H	I	L+0.2	Weight (KG)
PC-M8	M8x1.25	25 $^{+0.6}_{-1.2}$	45 $^{+1.2}_{-0.6}$	25 $^{+1.2}_{-0.6}$	8 $^{+1}_{-0.5}$	10 $^{+1.1}_{-0.5}$	12 $^{+1.1}_{-0.5}$	6	44 $^{+1.2}_{-0.6}$	2.5	13	0.11
PC-M10	M10x1.5	25 $^{+0.6}_{-1.2}$	45 $^{+1.2}_{-0.6}$	25 $^{+1.2}_{-0.6}$	8 $^{+1}_{-0.5}$	10 $^{+1.1}_{-0.5}$	12 $^{+1.1}_{-0.5}$	7.7	44 $^{+1.2}_{-0.6}$	3	17	0.11
PC-M12	M12x1.75	30 $^{+0.6}_{-1.2}$	54 $^{+1.2}_{-0.6}$	30 $^{+1.2}_{-0.6}$	10 $^{+1}_{-0.5}$	12 $^{+1.1}_{-0.5}$	14 $^{+1.1}_{-0.5}$	9.4	53 $^{+1.2}_{-0.6}$	3.5	21	0.19
PC-M14	M14x2.0	35 $^{+0.6}_{-1.2}$	63 $^{+1.2}_{-0.6}$	35 $^{+1.2}_{-0.6}$	12 $^{+1}_{-0.5}$	14 $^{+1.1}_{-0.5}$	16 $^{+1.1}_{-0.5}$	11	62 $^{+1.2}_{-0.6}$	4	24	0.28
PC-M16	M16x2.0	35 $^{+0.6}_{-1.2}$	63 $^{+1.2}_{-0.6}$	35 $^{+1.2}_{-0.6}$	12 $^{+1}_{-0.5}$	14 $^{+1.1}_{-0.5}$	16 $^{+1.1}_{-0.5}$	13	63 $^{+1.2}_{-0.6}$	4	27	0.31
PC-M20	M20x2.5	40 $^{+0.6}_{-1.2}$	72 $^{+1.2}_{-0.6}$	40 $^{+1.2}_{-0.6}$	14 $^{+1}_{-0.5}$	16 $^{+1.1}_{-0.5}$	19 $^{+1.1}_{-0.5}$	16.4	72 $^{+1.2}_{-0.6}$	5	30	0.49
PC-M24	M24x3.0	50 $^{+0.6}_{-1.2}$	90 $^{+1.2}_{-0.6}$	50 $^{+1.2}_{-0.6}$	18 $^{+1}_{-0.5}$	20 $^{+1.1}_{-0.5}$	24 $^{+1.1}_{-0.5}$	19.6	90 $^{+1.2}_{-0.6}$	6	36	0.93
PC-M30	M30x3.5	60 $^{+0.7}_{-1.3}$	108 $^{+1.5}_{-0.7}$	65 $^{+1.3}_{-0.7}$	22 $^{+1.2}_{-0.6}$	24 $^{+1.2}_{-0.6}$	28 $^{+1.2}_{-0.6}$	25	109 $^{+1.5}_{-0.7}$	7	45	1.76
PC-M36	M36x4.0	70 $^{+0.7}_{-1.3}$	126 $^{+1.5}_{-0.7}$	75 $^{+1.3}_{-0.7}$	26 $^{+1.2}_{-0.6}$	28 $^{+1.2}_{-0.6}$	32 $^{+1.2}_{-0.6}$	30.3	128 $^{+1.5}_{-0.7}$	8	54	2.65
PC-M42	M42x4.5	80 $^{+0.8}_{-1.3}$	144 $^{+2.1}_{-1.1}$	85 $^{+1.7}_{-0.8}$	30 $^{+1.7}_{-0.8}$	32 $^{+1.2}_{-0.6}$	38 $^{+1.2}_{-0.6}$	35.6	146 $^{+1.5}_{-0.7}$	9	63	3.96
PC-M48	M48x5.0	90 $^{+0.8}_{-1.3}$	166 $^{+2.1}_{-1.1}$	100 $^{+1.7}_{-0.8}$	35 $^{+1.7}_{-0.8}$	38 $^{+1.2}_{-0.6}$	46 $^{+1.2}_{-0.6}$	41	168 $^{+1.5}_{-0.7}$	10	68	6.5
PC-M56	M56x5.5	100 $^{+0.8}_{-1.3}$	184 $^{+2.1}_{-1.1}$	110 $^{+1.7}_{-0.8}$	38 $^{+1.7}_{-0.8}$	42 $^{+1.2}_{-0.6}$	50 $^{+1.2}_{-0.6}$	49.8	187 $^{+1.5}_{-0.7}$	11	78	8.8
PC-M64	M64x6.0	110 $^{+0.8}_{-1.3}$	206 $^{+2.1}_{-1.1}$	120 $^{+1.7}_{-0.8}$	42 $^{+1.7}_{-0.8}$	48 $^{+1.2}_{-0.6}$	58 $^{+1.2}_{-0.6}$	55.7	207 $^{+1.5}_{-0.7}$	12	90	12.46
PC-M72	M72x6.0	140 $^{+1.2}_{-2.4}$	260 $^{+3}_{-1.5}$	150 $^{+2.4}_{-1.2}$	50 $^{+2.1}_{-1.1}$	60 $^{+2.1}_{-1.1}$	72 $^{+2.1}_{-1.1}$	63.7	260 $^{+3}_{-1.5}$	12	100	20
PC-M80	M80x6.0	160 $^{+1.2}_{-2.4}$	296 $^{+3}_{-1.5}$	170 $^{+2.4}_{-1.2}$	55 $^{+2.1}_{-1.1}$	68 $^{+2.1}_{-1.1}$	80 $^{+2.1}_{-1.1}$	71.7	298 $^{+3}_{-1.5}$	12	112	34.2
PC-M100	M100x6.0	180 $^{+1.2}_{-2.4}$	330 $^{+3}_{-1.5}$	190 $^{+2.4}_{-1.2}$	60 $^{+2.1}_{-1.1}$	75 $^{+2.1}_{-1.1}$	88 $^{+2.1}_{-1.1}$	91.7	330 $^{+3}_{-1.5}$	12	130	49.1

UNC Thread(PC)

Model	D	A	B	C	E	F	M	G±0.1	H	I	L+0.2	Weight (KG)
PC-U5/16	UNC5/16-18	25 $^{+0.6}_{-1.2}$	45 $^{+1.2}_{-0.6}$	25 $^{+1.2}_{-0.6}$	8 $^{+1}_{-0.5}$	10 $^{+1.1}_{-0.5}$	12 $^{+1.1}_{-0.5}$	6	44 $^{+1.2}_{-0.6}$	2.5	13	0.11
PC-U3/8	UNC3/8-16	25 $^{+0.6}_{-1.2}$	45 $^{+1.2}_{-0.6}$	25 $^{+1.2}_{-0.6}$	8 $^{+1}_{-0.5}$	10 $^{+1.1}_{-0.5}$	12 $^{+1.1}_{-0.5}$	7.3	44 $^{+1.2}_{-0.6}$	3	17	0.11
PC-U1/2	UNC1/2-13	30 $^{+0.6}_{-1.2}$	54 $^{+1.2}_{-0.6}$	30 $^{+1.2}_{-0.6}$	10 $^{+1}_{-0.5}$	12 $^{+1.1}_{-0.5}$	14 $^{+1.1}_{-0.5}$	9.9	53 $^{+1.2}_{-0.6}$	3.5	21	0.19
PC-U5/8	UNC5/8-11	35 $^{+0.6}_{-1.2}$	63 $^{+1.2}_{-0.6}$	35 $^{+1.2}_{-0.6}$	12 $^{+1}_{-0.5}$	14 $^{+1.1}_{-0.5}$	16 $^{+1.1}_{-0.5}$	12.7	63 $^{+1.2}_{-0.6}$	4	27	0.33
PC-U3/4	UNC3/4-10	40 $^{+0.6}_{-1.2}$	72 $^{+1.2}_{-0.6}$	40 $^{+1.2}_{-0.6}$	14 $^{+1}_{-0.5}$	16 $^{+1.1}_{-0.5}$	19 $^{+1.1}_{-0.5}$	15.6	72 $^{+1.2}_{-0.6}$	5	30	0.55
PC-U7/8	UNC7/8-9	50 $^{+0.6}_{-1.2}$	90 $^{+1.2}_{-0.6}$	50 $^{+1.2}_{-0.6}$	18 $^{+1}_{-0.5}$	20 $^{+1.1}_{-0.5}$	24 $^{+1.1}_{-0.5}$	18.5	90 $^{+1.2}_{-0.6}$	6	36	0.74
PC-U1"	UNC1"-8	50 $^{+0.6}_{-1.2}$	90 $^{+1.2}_{-0.6}$	50 $^{+1.2}_{-0.6}$	18 $^{+1}_{-0.5}$	20 $^{+1.1}_{-0.5}$	24 $^{+1.1}_{-0.5}$	21.2	90 $^{+1.2}_{-0.6}$	6	36	0.74
PC-U1 1/4	UNC1 1/4-7	60 $^{+0.7}_{-1.3}$	108 $^{+1.5}_{-0.7}$	65 $^{+1.3}_{-0.7}$	22 $^{+1.2}_{-0.6}$	24 $^{+1.2}_{-0.6}$	28 $^{+1.2}_{-0.6}$	27.1	109 $^{+1.5}_{-0.7}$	7	45	1.66
PC-U1 1/2	UNC1 1/2-6	70 $^{+0.7}_{-1.3}$	126 $^{+1.5}_{-0.7}$	75 $^{+1.3}_{-0.7}$	26 $^{+1.2}_{-0.6}$	28 $^{+1.2}_{-0.6}$	32 $^{+1.2}_{-0.6}$	32.7	128 $^{+1.5}_{-0.7}$	8	54	2.65
PC-U1 3/4	UNC1 3/4-5	80 $^{+0.8}_{-1.3}$	144 $^{+2.1}_{-1.1}$	85 $^{+1.7}_{-0.8}$	30 $^{+1.7}_{-0.8}$	32 $^{+1.2}_{-0.6}$	38 $^{+1.2}_{-0.6}$	37.8	149 $^{+1.5}_{-0.7}$	9	63	4.03
PC-U2"	UNC2"-4 1/2	90 $^{+0.8}_{-1.3}$	166 $^{+2.1}_{-1.1}$	100 $^{+1.7}_{-0.8}$	35 $^{+1.7}_{-0.8}$	38 $^{+1.2}_{-0.6}$	46 $^{+1.2}_{-0.6}$	43.7	168 $^{+1.5}_{-0.7}$	10	68	6.38
PC-U2 1/2	UNC2 1/2-4	110 $^{+0.8}_{-1.3}$	206 $^{+2.1}_{-1.1}$	120 $^{+1.7}_{-0.8}$	42 $^{+1.7}_{-0.8}$	48 $^{+1.2}_{-0.6}$	58 $^{+1.2}_{-0.6}$	55.4	207 $^{+1.5}_{-0.7}$	12	90	12.4

Product Features:

- Forged from G80 high-strength Cr-Mo alloy steel,quenched and tempered to ensure sufficient strength and toughness.
- Manufactured and tested in accordance with the relevant standards of EU specification EN1677-1;certified with EuroCert CE.
- All products can be traced for quality through production and testing records.
- Metric threads meet DIN EN 13 (M-6g),UNC threads comply with ASME/ANSI B18.3.1M (UNC-2A).100% go-no go tested, with a 6g outer diameter tolerance grade.
- 100% magnetic particle inspected to ensure zero cracks.
- Dynamic fatigue rated to 20,000 cycles at 1.5 times the WLL.

Eyebolt Operation:

- Ensure the tapped hole has sufficient threaded length to engage the eyebolt shank fully.
- The eyebolt must be mounted vertically on flat support surface and fully seated.
- Read the Use and Maintenance Manual carefully before use and strictly follow.

Periodic Inspection:

- In-service eyebolts are required to be inspected quarterly by company's internal personnel and record the inspection results.
- In-service eyebolts shall receive annual inspection by manufacturer or a competent third body.

Particular Attention

The plane of the eye of each of a pair of eyebolts should ideally be within ± 5° of the plane containing the axes of the two eyebolts (see the figure).If at first this condition is not fulfilled, it can be achieved by the insertion of shims (spacing washers) which should not exceed in thickness, half the pitch of the relevant screw thread, or by machining the contacting surface.Under no circumstances should the eyebolt be over-tightened in an attempt to achieve correct alignment.Care should also be taken to avoid an alignment whereby the application of the angular load tends to unscrew the eyebolt from its seating.

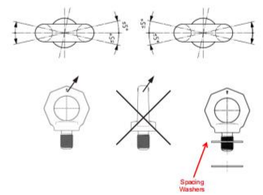

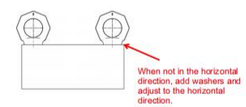

Load Table with Different Lifting Methods

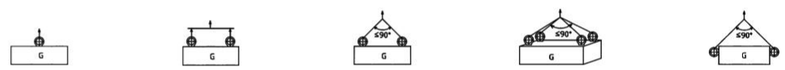

Model	Thread	Lifting capacity a single lifting point axial (WLL)t	Lifting capacity double lifting points axial (WLL)t	Lifting capacity double lifting points axial ≤ 90°(WLL)t	Lifting capacity four lifting points axial ≤ 90 °(WLL)t	Lifting capacity double lifting points with bolt fitted at sides of load ≤ 90°(WLL)t
PC-M8	M8x1.25	**0.6**	1.2	0.5	0.7	0.6
PC-M10	M10x1.5	**1**	2	0.9	1.3	0.9
PC-M12	M12x1.75	**1.6**	3.2	1.4	2.0	1.5
PC-M16	M16x2.0	**3**	6	2.7	3.8	2.8
PC-M20	M20x2.5	**4.5**	9	4.0	5.6	4.2
PC-M24	M24x3.0	**7**	14	6.2	8.7	6.6
PC-M30	M30x3.5	**11**	22	9.8	13.7	10.3
PC-M36	M36x4.0	**13**	26	11.5	16.1	12.2
PC-M42	M42x4.5	**18**	36	16	22.4	16.9
PC-M48	M48x5.0	**24**	48	21.3	29.8	22.5
PC-M56	M56x5.5	**34**	68	30.2	42.3	31.9
PC-M64	M64x6.0	**38**	76	33.7	47.2	36.6
PC-M72	M72x6.0	**42**	84	37.3	52.2	39.4
PC-M80	M80x6.0	**56**	112	49.7	69.6	52.5
PC-M100	M100x6.0	**80**	160	71	99.4	75

Load Table with Different Lifting Methods

PC-U5/16	UNC5/16-18	**0.6**	1.2	0.5	0.7	0.6
PC-U3/8	UNC3/8-16	**1**	2	0.9	1.3	0.9
PC-U1/2	UNC1/2-13	**1.6**	3.2	1.4	2	1.5
PC-U5/8	UNC5/8-11	**3**	6	2.7	3.8	2.8
PC-U3/4	UNC3/4-10	**4.5**	9	4.0	5.6	4.2
PC-U7/8	UNC7/8-9	**6**	12	5.3	7.5	5.7
PC-U1"	UNC1"-8	**7**	14	6.2	8.7	6.6
PC-U1 1/4	UNC1 1/4-7	**11**	22	9.8	13.7	10.3
PC-U1 1/2	UNC1 1/2-6	**13**	26	11.5	16.1	12.2
PC-U1 3/4	UNC1 3/4-5	**18**	36	16	22.4	16.9
PC-U2"	UNC2"-4 1/2	**24**	48	21.3	29.8	22.5
PC-U2 1/2	UNC2 1/2-4	**38**	76	33.7	47.2	36.6

⚠ WARNING

NEVER EXCEED PUBLISHED WOKING LOAD LIMIT.

PD DIN580 Carbon Steel Lifting Eyebolts

Manufacture and test criteria：
EN ISO 12100:2010,DIN 580:2024–05

Manufacturing process: C20 forging forming - normalizing - CNC precision machining

Drawing / Product specification

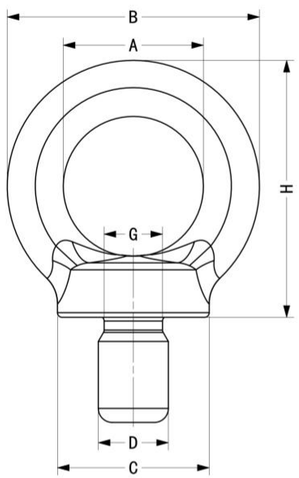

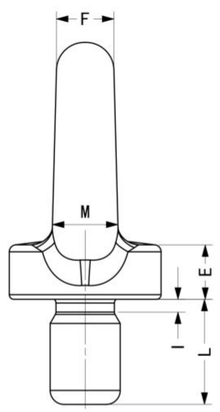



Metric Thread(PD)

Model	D	A	B	C	E	F	M	G±0.1	H	I	L+0.2	Weight (KG)
PD-M8	M8x1.25	20 $^{+0.6}_{-1.2}$	36 $^{+1.2}_{-0.6}$	20 $^{+1.2}_{-0.6}$	6 $^{+1}_{-0.5}$	8 $^{+1.1}_{-0.5}$	10 $^{+1.1}_{-0.5}$	6	36 $^{+1.2}_{-0.6}$	2.5	13	0.11
PD-M10	M10x1.5	25 $^{+0.6}_{-1.2}$	45 $^{+1.2}_{-0.6}$	25 $^{+1.2}_{-0.6}$	8 $^{+1}_{-0.5}$	10 $^{+1.1}_{-0.5}$	12 $^{+1.1}_{-0.5}$	7.7	44 $^{+1.2}_{-0.6}$	3	17	0.11
PD-M12	M12x1.75	30 $^{+0.6}_{-1.2}$	54 $^{+1.2}_{-0.6}$	30 $^{+1.2}_{-0.6}$	10 $^{+1}_{-0.5}$	12 $^{+1.1}_{-0.5}$	14 $^{+1.1}_{-0.5}$	9.4	53 $^{+1.2}_{-0.6}$	3.5	21	0.16
PD-M14	M14x2.0	35 $^{+0.6}_{-1.2}$	63 $^{+1.2}_{-0.6}$	35 $^{+1.2}_{-0.6}$	12 $^{+1}_{-0.5}$	14 $^{+1.1}_{-0.5}$	16 $^{+1.1}_{-0.5}$	11	62 $^{+1.2}_{-0.6}$	4	24	0.27
PD-M16	M16x2.0	35 $^{+0.6}_{-1.2}$	63 $^{+1.2}_{-0.6}$	35 $^{+1.2}_{-0.6}$	12 $^{+1}_{-0.5}$	14 $^{+1.1}_{-0.5}$	16 $^{+1.1}_{-0.5}$	13	63 $^{+1.2}_{-0.6}$	4	27	0.28
PD-M20	M20x2.5	40 $^{+0.6}_{-1.2}$	72 $^{+1.2}_{-0.6}$	40 $^{+1.2}_{-0.6}$	14 $^{+1}_{-0.5}$	16 $^{+1.1}_{-0.5}$	19 $^{+1.1}_{-0.5}$	16.4	72 $^{+1.2}_{-0.6}$	5	30	0.47
PD-M24	M24x3.0	50 $^{+0.6}_{-1.2}$	90 $^{+1.2}_{-0.6}$	50 $^{+1.2}_{-0.6}$	18 $^{+1}_{-0.5}$	20 $^{+1.1}_{-0.5}$	24 $^{+1.1}_{-0.5}$	19.6	90 $^{+1.2}_{-0.6}$	6	36	0.86
PD-M30	M30x3.5	60 $^{+0.7}_{-1.3}$	108 $^{+1.9}_{-0.7}$	65 $^{+1.9}_{-0.7}$	22 $^{+1.2}_{-0.6}$	24 $^{+1.2}_{-0.6}$	28 $^{+1.2}_{-0.6}$	25	109 $^{+1.9}_{-0.7}$	7	45	1.74
PD-M36	M36x4.0	70 $^{+0.7}_{-1.3}$	126 $^{+1.5}_{-0.7}$	75 $^{+1.3}_{-0.7}$	26 $^{+1.2}_{-0.6}$	28 $^{+1.2}_{-0.6}$	32 $^{+1.2}_{-0.6}$	30.3	128 $^{+1.5}_{-0.7}$	8	54	2.65
PD-M42	M42x4.5	80 $^{+0.8}_{-1.3}$	144 $^{+2.1}_{-1.1}$	85 $^{+1.7}_{-0.8}$	30 $^{+1.7}_{-0.8}$	32 $^{+1.2}_{-0.6}$	38 $^{+1.2}_{-0.6}$	35.6	146 $^{+1.5}_{-0.7}$	9	63	3.68
PD-M48	M48x5.0	90 $^{+0.8}_{-1.3}$	166 $^{+2.1}_{-1.1}$	100 $^{+1.7}_{-0.8}$	35 $^{+1.7}_{-0.8}$	38 $^{+1.2}_{-0.6}$	46 $^{+1.2}_{-0.6}$	41	168 $^{+1.5}_{-0.7}$	10	68	6
PD-M56	M56x5.5	100 $^{+0.8}_{-1.3}$	184 $^{+2.1}_{-1.1}$	110 $^{+1.7}_{-0.8}$	38 $^{+1.7}_{-0.8}$	42 $^{+1.2}_{-0.6}$	50 $^{+1.2}_{-0.6}$	49.8	187 $^{+1.5}_{-0.7}$	11	78	8.8
PD-M64	M64x6.0	110 $^{+0.8}_{-1.3}$	206 $^{+2.1}_{-1.1}$	120 $^{+1.7}_{-0.8}$	42 $^{+1.7}_{-0.8}$	48 $^{+1.2}_{-0.6}$	58 $^{+1.2}_{-0.6}$	55.7	207 $^{+1.5}_{-0.7}$	12	90	12.23
PD-M72	M72x6.0	140 $^{+1.2}_{-2.4}$	260 $^{+3}_{-1.5}$	150 $^{+2.4}_{-1.2}$	50 $^{+2.1}_{-1.1}$	60 $^{+2.1}_{-1.1}$	72 $^{+2.1}_{-1.1}$	63.7	260 $^{+3}_{-1.5}$	12	100	23.68
PD-M80	M80x6.0	160 $^{+1.2}_{-2.4}$	296 $^{+3}_{-1.5}$	170 $^{+2.4}_{-1.2}$	55 $^{+2.1}_{-1.1}$	68 $^{+2.1}_{-1.1}$	80 $^{+2.1}_{-1.1}$	71.7	298 $^{+3}_{-1.5}$	12	112	34.55
PD-M100	M100x6.0	180 $^{+1.2}_{-2.4}$	330 $^{+3}_{-1.5}$	190 $^{+2.4}_{-1.2}$	60 $^{+2.1}_{-1.1}$	75 $^{+2.1}_{-1.1}$	88 $^{+2.1}_{-1.1}$	91.7	330 $^{+3}_{-1.5}$	12	130	49.1

UNC Thread(PD)

Model	D	A	B	C	E	F	M	G±0.1	H	I	L+0.2	Weight (KG)
PD-U5/16	UNC5/16-18	20 $^{+0.6}_{-1.2}$	36 $^{+1.2}_{-0.6}$	20 $^{+1.2}_{-0.6}$	6 $^{+1}_{-0.5}$	8 $^{+1.1}_{-0.5}$	10 $^{+1.1}_{-0.5}$	6	36 $^{+1.2}_{-0.6}$	2.5	13	0.06
PD-U3/8	UNC3/8-16	25 $^{+0.6}_{-1.2}$	45 $^{+1.2}_{-0.6}$	25 $^{+1.2}_{-0.6}$	8 $^{+1}_{-0.5}$	10 $^{+1.1}_{-0.5}$	12 $^{+1.1}_{-0.5}$	7.3	44 $^{+1.2}_{-0.6}$	3	17	0.11
PD-U1/2	UNC1/2-13	30 $^{+0.6}_{-1.2}$	54 $^{+1.2}_{-0.6}$	30 $^{+1.2}_{-0.6}$	10 $^{+1}_{-0.5}$	12 $^{+1.1}_{-0.5}$	14 $^{+1.1}_{-0.5}$	9.9	53 $^{+1.2}_{-0.6}$	3.5	21	0.18
PD-U5/8	UNC5/8-11	35 $^{+0.6}_{-1.2}$	63 $^{+1.2}_{-0.6}$	35 $^{+1.2}_{-0.6}$	12 $^{+1}_{-0.5}$	14 $^{+1.1}_{-0.5}$	16 $^{+1.1}_{-0.5}$	12.7	63 $^{+1.2}_{-0.6}$	4	27	0.28
PD-U3/4	UNC3/4-10	40 $^{+0.6}_{-1.2}$	72 $^{+1.2}_{-0.6}$	40 $^{+1.2}_{-0.6}$	14 $^{+1}_{-0.5}$	16 $^{+1.1}_{-0.5}$	19 $^{+1.1}_{-0.5}$	15.6	72 $^{+1.2}_{-0.6}$	5	30	0.43
PD-U7/8	UNC7/8-9	50 $^{+0.6}_{-1.2}$	90 $^{+1.2}_{-0.6}$	50 $^{+1.2}_{-0.6}$	18 $^{+1}_{-0.5}$	20 $^{+1.1}_{-0.5}$	24 $^{+1.1}_{-0.5}$	18.5	90 $^{+1.2}_{-0.6}$	6	36	0.74
PD-U1"	UNC1"-8	50 $^{+0.6}_{-1.2}$	90 $^{+1.2}_{-0.6}$	50 $^{+1.2}_{-0.6}$	18 $^{+1}_{-0.5}$	20 $^{+1.1}_{-0.5}$	24 $^{+1.1}_{-0.5}$	21.2	90 $^{+1.2}_{-0.6}$	6	36	0.97
PD-U1 1/4	UNC1 1/4-7	60 $^{+0.7}_{-1.3}$	108 $^{+1.9}_{-0.7}$	65 $^{+1.9}_{-0.7}$	22 $^{+1.2}_{-0.6}$	24 $^{+1.2}_{-0.6}$	28 $^{+1.2}_{-0.6}$	27.1	109 $^{+1.9}_{-0.7}$	7	45	1.66
PD-U1 1/2	UNC1 1/2-6	70 $^{+0.7}_{-1.3}$	126 $^{+1.5}_{-0.7}$	75 $^{+1.3}_{-0.7}$	26 $^{+1.2}_{-0.6}$	28 $^{+1.2}_{-0.6}$	32 $^{+1.2}_{-0.8}$	32.7	128 $^{+1.5}_{-0.7}$	8	54	2.54
PD-U1 3/4	UNC1 3/4-5	80 $^{+0.8}_{-1.3}$	144 $^{+2.1}_{-1.1}$	85 $^{+1.7}_{-0.8}$	30 $^{+1.7}_{-0.8}$	32 $^{+1.2}_{-0.6}$	38 $^{+1.2}_{-0.6}$	37.8	149 $^{+1.5}_{-0.7}$	9	63	4.03
PD-U2"	UNC2"-4 1/2	90 $^{+0.8}_{-1.3}$	166 $^{+2.1}_{-1.1}$	100 $^{+1.7}_{-0.8}$	35 $^{+1.7}_{-0.8}$	38 $^{+1.2}_{-0.6}$	46 $^{+1.2}_{-0.8}$	43.7	168 $^{+1.5}_{-0.7}$	10	68	6.38
PD-U2 1/2	UNC2 1/2-4	110 $^{+0.8}_{-1.3}$	206 $^{+2.1}_{-1.1}$	120 $^{+1.7}_{-0.8}$	42 $^{+1.7}_{-0.8}$	48 $^{+1.2}_{-0.6}$	58 $^{+1.2}_{-0.6}$	55.4	207 $^{+1.5}_{-0.7}$	12	90	12.4

Product Features:
- Forged from C20 carbon steel, normalized to ensure sufficient strength and toughness.
- Manufactured and tested in accordance with the relevant standards of EU specification DIN 580; certified with EuroCert CE.
- All products can be traced for quality through production and testing records.
- Metric threads meet DIN EN 13 (M-6g),UNC threads comply with ASME/ANSI B18.3.1M (UNC-2A).100% go-no go tested, with a 6g outer diameter tolerance grade.
- 100% magnetic particle inspected to ensure zero cracks.
- Dynamic fatigue rated to 20,000 cycles at 1.5 times the WLL.

Eyebolt Operation:
- Ensure the tapped hole has sufficient threaded length to engage the eyebolt shank fully.
- The eyebolt must be mounted vertically on flat support surface and fully seated.
- Read the Use and Maintenance Manual carefully before use and strictly follow.

Periodic Inspection:
- In-service eyebolts are required to be inspected quarterly by company's internal personnel and record the inspection results.
- In-service eyebolts shall receive annual inspection by manufacturer or a competent third body.

Particular Attention

The plane of the eye of each of a pair of eyebolts should ideally be within ± 5° of the plane containing the axes of the two eyebolts (see the figure).If at first this condition is not fulfilled, it can be achieved by the insertion of shims (spacing washers) which should not exceed in thickness, half the pitch of the relevant screw thread, or by machining the contacting surface.Under no circumstances should the eyebolt be over-tightened in an attempt to achieve correct alignment.Care should also be taken to avoid an alignment whereby the application of the angular load tends to unscrew the eyebolt from its seating.

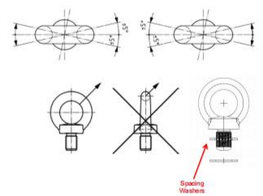

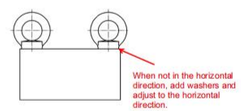

Load Table with Different Lifting Methods



Model	Thread	Lifting capacity a single lifting point axial (WLL)t	Lifting capacity double lifting points axial (WLL)t	Lifting capacity double lifting points with bolt fitted at sides of load ≤ 90°(WLL)t
PD-M8	M8x1.25	**0.14**	0.2	0.14
PD-M10	M10x1.5	**0.23**	0.34	0.23
PD-M12	M12x1.75	**0.34**	0.48	0.34
PD-M14	M14x2.0	**0.6**	0.86	0.6
PD-M16	M16x2.0	**0.7**	1	0.7
PD-M20	M20x2.5	**1.2**	1.72	1.2
PD-M24	M24x3.0	**1.8**	2.58	1.8
PD-M30	M30x3.5	**3.6**	5.04	3.6
PD-M36	M36x4.0	**5.1**	7.14	5.1
PD-M42	M42x4.5	**7**	9.8	7
PD-M48	M48x5.0	**8.6**	12.2	8.6
PD-M56	M56x5.5	**11.5**	16.4	11.5
PD-M64	M64x6.0	**16**	22.4	16
PD-M72	M72x6.0	**21**	29.4	21
PD-M80	M80x6.0	**28**	40	28
PD-M100	M100x6.0	**40**	58	40

Load Table with Different Lifting Methods

PD-U5/16	UNC5/16-18	**0.14**	0.2	0.14
PD-U3/8	UNC3/8-16	**0.23**	0.34	0.23
PD-U1/2	UNC1/2-13	**0.34**	0.48	0.34
PD-U5/8	UNC5/8-11	**0.7**	1	0.7
PD-U3/4	UNC3/4-10	**1.2**	1.72	1.2
PD-U7/8	UNC7/8-9	**1.4**	1.96	1.4
PD-U1"	UNC1"-8	**1.8**	2.58	1.8
PD-U1 1/4	UNC1 1/4-7	**3.6**	5.04	3.6
PD-U1 1/2	UNC1 1/2-6	**5.1**	7.14	5.1
PD-U1 3/4	UNC1 3/4-5	**7**	9.8	7
PD-U2"	UNC2"-4 1/2	**8.6**	12.2	8.6
PD-U2 1/2	UNC2 1/2-4	**16**	22.4	16

⚠ WARNING

NEVER EXCEED PUBLISHED WOKING LOAD LIMIT.

S6 Bow Shackle

Manufacture and test criteria：
EN 13889:2003+A1:2008 RR–C–271F Type IVA Grade A

Manufacturing process: 40Cr forging forming - rough machining - quenching and tempering - precision machining - surface Dacromet finish (salt spray test 720H)

(G-209) Drawing / Product specification

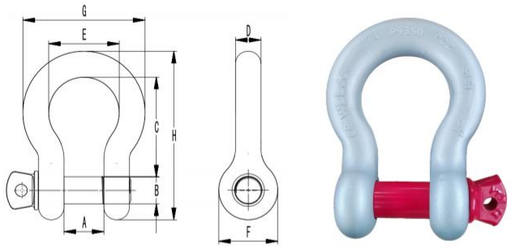

(G-2130) Drawing / Product specification

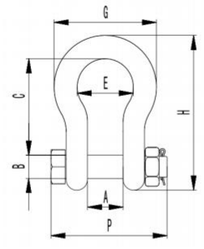





(G-209) Specifications Table

Model	A±2.5	B±1	C±2	D±1.5	E±3	F±2.5	G±3	H±5	Weight(KG)	Working Load Limit (WLL) t
PSS-BW-3/16	9.7	6.4	22.4	4.8	15.2	14.2	24.9	37.3	0.03	0.33
PSS-BW-1/4	11.9	7.9	28.7	6.4	19.8	15.5	32.5	46.7	0.05	0.5
PSS-BW-5/16	13.5	9.7	30.9	7.9	21.3	19.1	37.3	53.1	0.09	0.75
PSS-BW-3/8	16.8	11.2	36.6	9.7	26.2	23.1	45.2	63.2	0.14	1
PSS-BW-7/16	19.1	12.7	42.9	11.2	29.5	26.9	51.6	73.9	0.17	1.5
PSS-BW-1/2	20.6	16.0	47.8	12.7	33.3	30.2	58.7	83.3	0.33	2
PSS-BW-5/8	26.9	19.1	60.5	16.0	42.9	38.1	74.7	106.4	0.62	3.25
PSS-BW-3/4	31.8	22.4	71.4	19.1	50.8	46.0	88.9	126.2	1.07	4.75
PSS-BW-7/8	36.6	25.4	84.1	22.4	57.9	53.1	102.4	148.1	1.64	6.5
PSS-BW-1"	42.9	28. 7	95.3	25. 4	68. 3	60.5	119.1	166.6	2.28	8.5
PSS-BW-1 1/8	45.0	31. 8	108.0	29. 5	73. 9	68.3	131.1	189.7	3.36	9.5
PSS-BW-1 1/4	51.6	35. 1	119.1	32. 8	82. 6	76.2	146.1	209.6	4.31	12
PSS-BW-1 3/8	57.2	38. 1	133.4	36. 1	92. 2	84.1	162.1	232.7	6.14	13.5
PSS-BW-1 1/2	60.5	41. 4	146.1	39. 1	98. 6	92.2	174.8	254.0	7.80	17
PSS-BW-1 3/4	73.2	50. 8	177.8	46. 7	127. 0	106.4	225.0	314.4	12.6	25
PSS-BW-2"	82.6	57. 2	196.9	52. 8	146. 1	122.2	253.2	347.5	20.41	35
PSS-BW-2 1/2	104.9	69. 9	266.7	68. 8	184. 2	144.5	326.9	453.1	38.9	55

(G-2130) Specifications Table

Model	A±2.5	B±1	C±2	D±1.5	E±3	F±2.5	G±3	H±5	P±3	Weight(KG)	Working Load Limit (WLL) t
PSS-BX-3/16	9.7	6.4	22.4	4.8	15.2	14.2	24.9	37.3	33	0.04	0.33
PSS-BX-1/4	11.9	7.9	28.7	6.4	19.8	15.5	32.5	46.7	40	0.07	0.5
PSS-BX-5/16	13.5	9.7	30.9	7.9	21.3	19.1	37.3	53.1	47	0.12	0.75
PSS-BX-3/8	16.8	11.2	36.6	9.7	26.2	23.1	45.2	63.2	57	0.19	1
PSS-BX-7/16	19.1	12.7	42.9	11.2	29.5	26.9	51.6	73.9	66	0.23	1.5
PSS-BX-1/2	20.6	16.0	47.8	12.7	33.3	30.2	58.7	83.3	72	0.36	2
PSS-BX-5/8	26.9	19.1	60.5	16.0	42.9	38.1	74.7	106.4	91	0.76	3.25
PSS-BX-3/4	31.8	22.4	71.4	19.1	50.8	46.0	88.9	126.2	106	1.23	4.75
PSS-BX-7/8	36.6	25.4	84.1	22.4	57.9	53.1	102.4	148.1	122	1.97	6.5
PSS-BX-1"	42.9	28. 7	95.3	25. 4	68. 3	60.5	119.1	166.6	138	2.57	8.5
PSS-BX-1 1/8	45.0	31. 8	108.0	29. 5	73. 9	68.3	131.1	189.7	152	3.75	9.5
PSS-BX-1 1/4	51.6	35. 1	119.1	32. 8	82. 6	76.2	146.1	209.6	173	5.31	12
PSS-BX-1 3/8	57.2	38. 1	133.4	36. 1	92. 2	84.1	162.1	232.7	185	7.18	13.5
PSS-BX-1 1/2	60.5	41. 4	146.1	39. 1	98. 6	92.2	174.8	254.0	199	9.43	17
PSS-BX-1 3/4	73.2	50. 8	177.8	46. 7	127. 0	106.4	225.0	314.4	238	15.38	25
PSS-BX-2"	82.6	57. 2	196.9	52. 8	146. 1	122.2	253.2	347.5	270	23.7	35
PSS-BX-2 1/2	104.9	69. 9	266.7	66.5	184. 2	144.5	326.9	453.1	345	44.57	55
PSS-BX-3"	127. 0	82.6	330. 2	76.2	200.2	165. 1	364.7	546. 1	400	69.85	85
PSS-BX-3 1/2	133. 4	95.3	371. 6	91.9	228.6	203. 2	419.1	625. 6	470	120.2	120
PSS-BX-4"	139. 7	108.0	368. 3	104.1	254.0	228. 6	467.9	652. 5	518	153.32	150

⚠ WARNING

NEVER EXCEED PUBLISHED WOKING LOAD LIMIT.

T8 Bow Shackle

Manufacture and test criteria：
RR–C–271F Type IVA Grade B

Manufacturing process: 35CrMoA forging forming - rough machining - quenching and tempering - precision machining - surface Dacromet finish (salt spray test 720H)

(G-209A) Drawing / Product specification

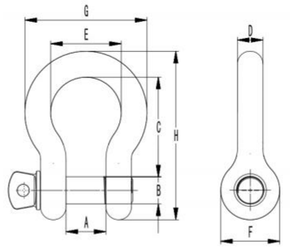



(G-2140) Drawing / Product specification

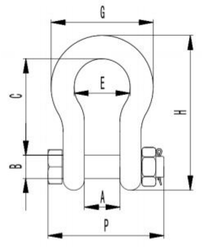





(G-209A) Specifications Table

Model	A±2.5	B±1	C±2	D±1.5	E±3	F±2.5	G±3	H±5	Weight(KG)	Working Load Limit (WLL) t
PST-BW-3/16	9.7	6.4	22.4	4.8	15.2	14.2	24.9	37.3	0.03	0.5
PST-BW-1/4	11.9	7.9	28.7	6.4	19.8	15.5	32.5	46.7	0.05	0.75
PST-BW-5/16	13.5	9.7	30.9	7.9	21.3	19.1	37.3	53.1	0.09	1.2
PST-BW-3/8	16.8	11.2	36.6	9.7	26.2	23.1	45.2	63.2	0.14	2
PST-BW-7/16	19.1	12.7	42.9	11.2	29.5	26.9	51.6	73.9	0.17	2.5
PST-BW-1/2	20.6	16.0	47.8	12.7	33.3	30.2	58.7	83.3	0.33	3.3
PST-BW-5/8	26.9	19.1	60.5	16.0	42.9	38.1	74.7	106.4	0.62	5
PST-BW-3/4	31.8	22.4	71.4	19.1	50.8	46.0	88.9	126.2	1.07	7
PST-BW-7/8	36.6	25.4	84.1	22.4	57.9	53.1	102.4	148.1	1.64	9.5
PST-BW-1"	42.9	28. 7	95.3	25. 4	68. 3	60.5	119.1	166.6	2.28	12.5
PST-BW-1 1/8	45.0	31. 8	108.0	29. 5	73. 9	68.3	131.1	189.7	3.36	15
PST-BW-1 1/4	51.6	35. 1	119.1	32. 8	82. 6	76.2	146.1	209.6	4.31	18
PST-BW-1 3/8	57.2	38. 1	133.4	36. 1	92. 2	84.1	162.1	232.7	6.14	21
PST-BW-1 1/2	60.5	41. 4	146.1	39. 1	98. 6	92.2	174.8	254.0	7.80	30
PST-BW-1 3/4	73.2	50. 8	177.8	46. 7	127. 0	106.4	225.0	314.4	12.6	40
PST-BW-2"	82.6	57. 2	196.9	52. 8	146. 1	122.2	253.2	347.5	20.41	55
PST-BW-2 1/2	104.9	69. 9	266.7	68. 8	184. 2	144.5	326.9	453.1	38.9	85

(G-2140) Specifications Table

Model	A±2.5	B±1	C±2	D±1.5	E±3	F±2.5	G±3	H±5	P±3	Weight(KG)	Working Load Limit (WLL) t
PST-BX-3/16	9.7	6.4	22.4	4.8	15.2	14.2	24.9	37.3	33	0.04	0.5
PST-BX-1/4	11.9	7.9	28.7	6.4	19.8	15.5	32.5	46.7	40	0.07	0.75
PST-BX-5/16	13.5	9.7	30.9	7.9	21.3	19.1	37.3	53.1	47	0.12	1.2
PST-BX-3/8	16.8	11.2	36.6	9.7	26.2	23.1	45.2	63.2	57	0.19	2
PST-BX-7/16	19.1	12.7	42.9	11.2	29.5	26.9	51.6	73.9	66	0.23	2.5
PST-BX-1/2	20.6	16.0	47.8	12.7	33.3	30.2	58.7	83.3	72	0.36	3.3
PST-BX-5/8	26.9	19.1	60.5	16.0	42.9	38.1	74.7	106.4	91	0.76	5
PST-BX-3/4	31.8	22.4	71.4	19.1	50.8	46.0	88.9	126.2	106	1.23	7
PST-BX-7/8	36.6	25.4	84.1	22.4	57.9	53.1	102.4	148.1	122	1.97	9.5
PST-BX-1"	42.9	28.7	95.3	25.4	68.3	60.5	119.1	166.6	138	2.57	12.5
PST-BX-1 1/8	45.0	31.8	108.0	29.5	73.9	68.3	131.1	189.7	152	3.75	15
PST-BX-1 1/4	51.6	35.1	119.1	32.8	82.6	76.2	146.1	209.6	173	5.31	18
PST-BX-1 3/8	57.2	38.1	133.4	36.1	92.2	84.1	162.1	232.7	185	7.18	21
PST-BX-1 1/2	60.5	41.4	146.1	39.1	98.6	92.2	174.8	254.0	199	9.43	30
PST-BX-1 3/4	73.2	50.8	177.8	46.7	127.0	106.4	225.0	314.4	238	15.38	40
PST-BX-2"	82.6	57.2	196.9	52.8	146.1	122.2	253.2	347.5	270	23.7	55
PST-BX-2 1/2	104.9	69.9	266.7	66.5	184.2	144.5	326.9	453.1	345	44.57	85
PST-BX-3"	127.0	82.6	330.2	76.2	200.2	165.1	364.7	546.1	400	69.85	120
PST-BX-3 1/2	133.4	95.3	371.6	91.9	228.6	203.2	419.1	625.6	470	120.2	150
PST-BX-4"	139.7	108.0	368.3	104.1	254.0	228.6	467.9	652.5	518	153.32	175
PST-BX-4 3/4	184.0	121.0	386.0	121.0	279.0	267.0	529.0	706.0	587	205	200
PST-BX-5"	216.0	127.0	470.0	127.0	330.0	305.0	600.0	829.0	617	269	250
PST-BX-6"	213.0	152.0	475.0	149.0	330.0	330.0	629.0	871.0	646	359	300

⚠ WARNING

NEVER EXCEED PUBLISHED WOKING LOAD LIMIT.

PW Universal Swivel Lifting Base

Manufacture and test criteria:
EN ISO 12100:2010, EN 1677-1:2000+A1:2008

Patent No.:ZL2024 3 0138263.3 ZL 2024 2 0522087.8

Manufacturing process: high-strength alloy steel - forging forming - normalizing - rough machining - quenching and tempering - precision machining - surface finisht

Drawing / Product specification

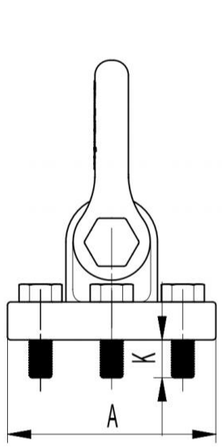

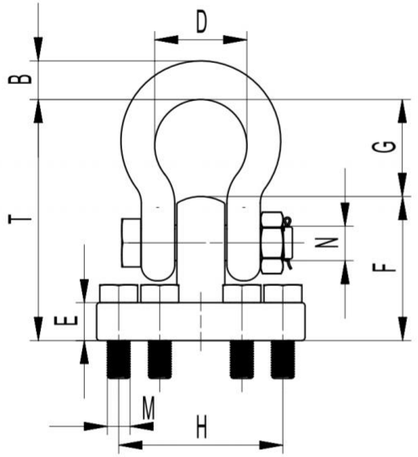



Specifications Table

Model	Load (t)	Weight(KG)	T±3	A±0.5	B±2	D±3	E±0.5	F±1	G±3	H±0.2	K±0.5	M±0.2	N±3	Bolt specification	Torque(Nm)
PW-55T	55	80	382	330	61	146	60	228	154	260	60	36	56	6XM36-120-12.9	600Nm
PW-85T	85	167	508	400	79	184	89	305	211.5	310	71	48	68	6XM48-160-12.9	1100Nm
PW-100T	100	198	587	400	92	200	89	315	272.5	310	71	48	82	6XM48-160-12.9	1100Nm
PW-120T	120	340	608.5	571	92	200	110	350.5	258	445	75	48	82	6XM48-185-12.9	1100Nm
PW-150T	150	400	657	570	105	229	110	358.5	299	420	63	42	95	10XM42-173-12.9	800Nm
PW-200T	200	615	734.5	650	125	279	100	440	294.5	500	71	48	121	10XM48-171-12.9	1100Nm
PW-250T	250	965	872	730	142	330	138	520	352	580	72	48	127	12XM48-210-12.9	1100Nm
PW-300T	300	1235	899	790	154	330	160	550	349	670	75	48	152	16XM48-225-12.9	1100Nm

Load Table with Different Lifting Methods

Lifting method								 (Unsymmetry)			 (Unsymmetry)
Number of lifting points		1	2	1	2	2	2	2	3-4	3-4	3-4
Lifting angle		0°	0°	90°	90°	≤90°	90–120°	≤90°	≤90°	90–120°	≤90°
Model	Shackle	Working Load Limit (WLL) t									
PW-55T	PST-BX-2"	55	110	**55**	110	77	55	55	115	82	55
PW-85T	PST-BX-2 1/2	85	170	**85**	170	119	85	85	178	127	85
PW-100T	PST-BX-3"	100	200	**100**	200	140	100	100	210	150	100
PW-120T	PST-BX-3"	120	240	**120**	240	168	120	120	252	180	120
PW-150T	PST-BX-3 1/2	150	300	**150**	300	210	150	150	315	225	150
PW-200T	PST-BX-4 3/4	200	400	**200**	400	280	200	200	420	300	200
PW-250T	PST-BX-5"	250	500	**250**	500	350	250	250	525	375	250
PW-300T	PST-BX-6"	300	600	**300**	600	420	300	300	630	450	300

⚠ WARNING
NEVER EXCEED PUBLISHED WOKING LOAD LIMIT.

DMK11 Lifting Lugs With Lifting Pin and Safety Ring

Manufacture and test criteria:
EN ISO 12100:2010, Meets VDI 3366(2021-07-00)

Patent No.:ZL 2021 3 0356963.6 ZL 2019 2 0459722.1

Manufacturing process:
Lifting Lugs: C20(C45) forging forming – normalizing – CNC precision machining
Lifting Pin: chromium–molybdenum alloy steel – rough machining – quenching and tempering – precision machining

Drawing / Product specification

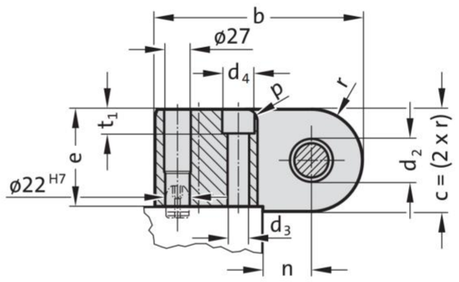

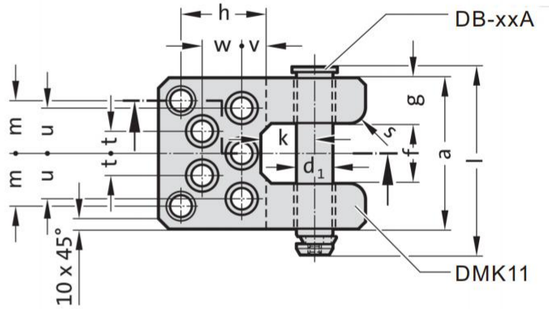

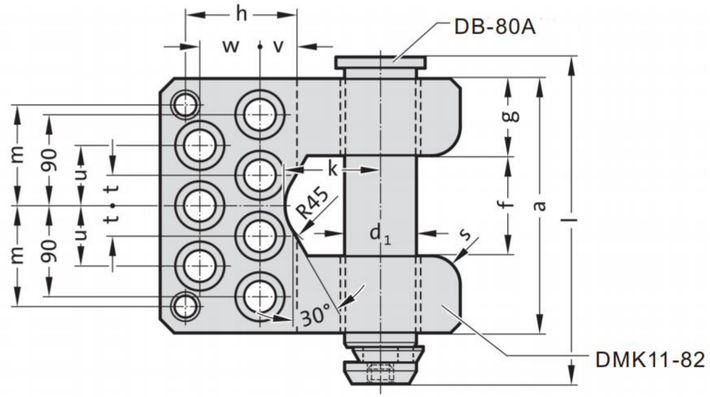



Specifications Table

Model	Max. load capacity of each pair(kg)	d1 $^{+0.5}_{-1}$	d2 $^{+0.5}_{-1}$	a $^{+0.5}_{-0.5}$	b $^{+5}_{-2}$	c $^{+1.5}_{-0.5}$	e $^{+1}_{-0.5}$	f $^{+1}_{-1}$	g $^{+1.5}_{-1}$	h $^{+0.5}_{-0.2}$	k $^{+1}_{-1}$	l $^{+1.5}_{-1.5}$	m $^{+0.1}_{-0.1}$	n $^{+0.5}_{-0.5}$	s $^{+5}_{-5}$	t $^{+0.1}_{-0.1}$	u $^{+0.1}_{-0.1}$	v $^{+0.2}_{-0.2}$	w $^{+0.1}_{-0.1}$	d3 $^{+0.5}_{-0.5}$	d4 $^{+0.5}_{-0.5}$	t1 $^{+1}_{-0.5}$	Weight (KG)	Lifting Pin
DMK11-32	6400	30	32	126	185	80	75	50	38	85	50	160.5	45	40	16	20	40	30	35	17.5	26	17.5	9	DB-30A
DMK11-42	10000	40	42	150	210	100	95	60	45	87	55	190	52	50	20	22.5	45	25	40	22	33	21.5	14.6	DB-40A
DMK11-52	16000	50	52	175	240	120	115	75	50	95	70	222	62.5	60	24	25	50	35	45	26	40	25.5	22.7	DB-50A
DMK11-62	25000	60	62	200	300	140	130	80	60	145	80	247	77.5	65	30	35	65	60	65	39	57	38	36.54	DB-60A
DMK11-82	36000	80	82	250	300	160	150	100	75	105	95	307	100	90	30	30	60	30	60	33	48	32	62.20	DB-80A

Note: When calculating the maximum allowable load capacity, at least two lifting modules should be used under the situations where molds are available or utilized.
For special specifications,customization is available as required.

⚠ WARNING
NEVER EXCEED PUBLISHED WOKING LOAD LIMIT.

DMK12 Lifting Lugs With Lifting Pin and Safety Ring

Manufacture and test criteria:EN ISO 12100:2010, Meets VDI 3366(2021-07-00)

Manufacturing process:
Lifting Lugs: C20(C45) forging forming – normalizing – CNC precision machining
Lifting Pin: chromium–molybdenum alloy steel – rough machining – quenching and tempering – precision machining

Drawing / Product specification



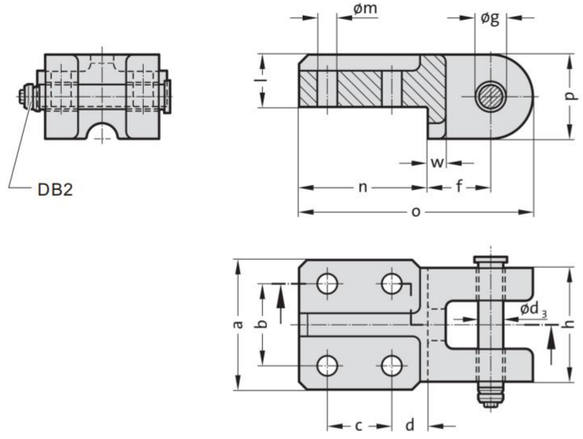

Specifications Table

Model	Max. load capacity of each pair(kg)	a	b	c	d	f	g(H13)	h	l	m	n	o	p	w	d3	Weight(KG)	Lifting Pin
DMK12-16	1200	80	50	40	22.5	39	16	70	32	12.5	80	145	52	11	15.6	1.92	DB2-16
DMK12-21	2000	90	60	40	27.5	42	21	79	36	16.5	90	160	56	13	20.6	2.57	DB2-21
DMK12-26	4000	100	65	65	32.5	60	26	90	50	21	120	215	70	20	25.6	5.52	DB2-26

Note: When calculating the maximum allowable load capacity, at least two lifting modules should be used under the situations where molds are available or utilized.
For special specifications,customization is available as required.

Drawing / Product specification



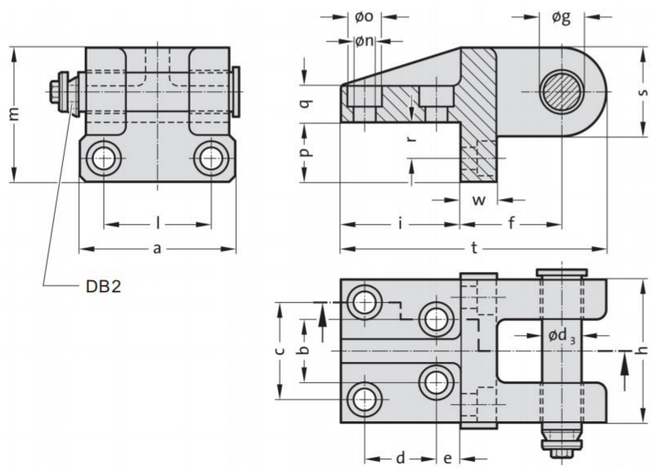

Specifications Table

Model	Max. load capacity of each pair(kg)	a	b	c	d	e	f	g(H13)	h	i	l	m	n	o	p	q	r	s	t	w	d3	Weight(KG)	Lifting Pin
DMK12-34	8000	135	56	84	60	20	85	34	125	100	96	111	18	28	50	30	30	72	221	30	33	8.63	DB2-34
DMK12-44	14000	180	80	110	70	30	100	44	160	125	130	140	22	36	60	40	35	90	270	40	43	17.27	DB2-44

Note: When calculating the maximum allowable load capacity, at least two lifting modules should be used under the situations where molds are available or utilized.
For special specifications,customization is available as required.

⚠ WARNING
NEVER EXCEED PUBLISHED WOKING LOAD LIMIT.

DMK10 Lifting Lugs With Lifting Pin and Safety Ring

Manufacture and test criteria:EN ISO 12100:2010, Meets VDI 3366(2021-07-00)

Manufacturing process:
Lifting Lugs: C20(C45) forging forming – normalizing – CNC precision machining
Lifting Pin: chromium–molybdenum alloy steel – rough machining – quenching and tempering – precision machining

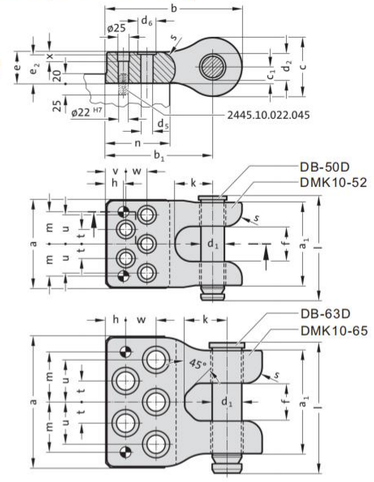

Drawing / Product specification



Specifications Table

Model	Max. load capacity of each pair(kg)	d1	d2	a	a1	b	b1	c	c1	e	f	h	k	l	m	n	s	t	u	v	w	x	d5	d6	e2	Lifting Pin
DMK10-52	16000	50	52	188	177	290	227.5	125	35	67	75	37.5	80	221	68.5	135	35	31	62	42.5	45	20	26	40	65	DB-50D
DMK10-65	25000	63	65	280	220	333	258	150	47	91	80	42	90	277	107	150	35	45	90	42	65	46	39	58	84	DB-63D

Note: When calculating the maximum allowable load capacity, at least two lifting modules should be used under the situations where molds are available or utilized.
For special specifications,customization is available as required.

DMK13 Lifting Lugs With Lifting Pin and Safety Ring

Manufacture and test criteria:EN ISO 12100:2010, Meets VDI 3366(2021-07-00)

Manufacturing process:
Lifting Lugs: C20(C45) forging forming – normalizing – CNC precision machining
Lifting Pin: chromium–molybdenum alloy steel – rough machining – quenching and tempering – precision machining

Drawing / Product specification



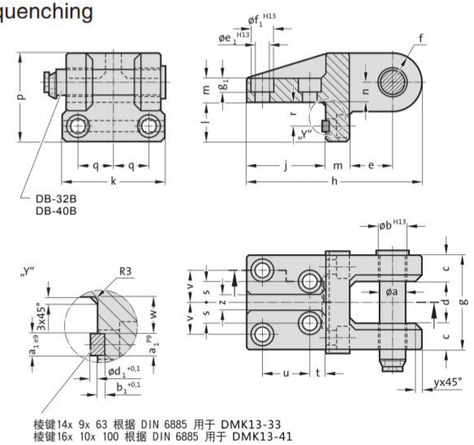

Specifications Table

Model	Max. load capacity of each pair(kg)	a	b	c	d	e	f	g(H13)	h	j	k	l	m	n	p	q	r	s	t	u	v	w	y	z	a1	b1	d2	e1	f1	g1	Lifting Pin
DMK13-33	8000	32	33	35	55	55	36	125	221	100	135	50	30	25	111	48	30	28	20	60	42	24	10	20	14	4.5	4.5	18	28	17	DB-32B
DMK13-41	12600	40	41	50	60	60	45	160	270	125	180	60	40	35	140	65	35	40	30	70	55	27	12.5	25	16	5	5	22	36	21	DB-40B

Note: When calculating the maximum allowable load capacity, at least two lifting modules should be used under the situations where molds are available or utilized.
For special specifications,customization is available as required.

⚠ WARNING
NEVER EXCEED PUBLISHED WOKING LOAD LIMIT.

DMK15 Lifting Lugs With Lifting Pin and Safety Ring

Manufacture and test criteria:EN ISO 12100:2010, Meets VDI 3366(2021-07-00)

Manufacturing process:
Lifting Lugs: C20(C45) forging forming – normalizing – CNC precision machining
Lifting Pin: chromium–molybdenum alloy steel – rough machining – quenching and tempering – precision machining

Drawing / Product specification

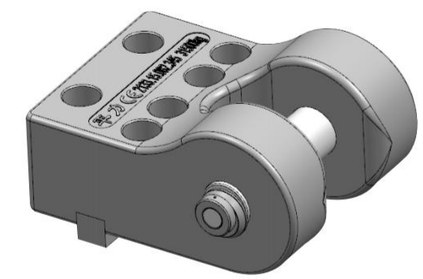

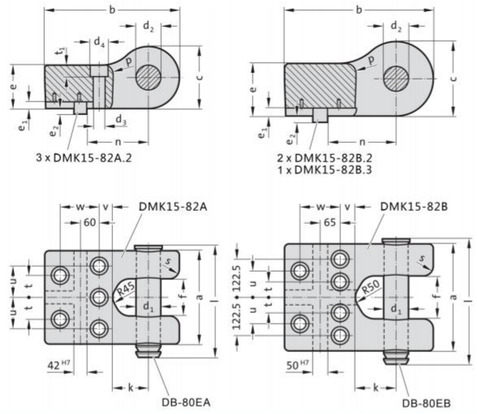

Specifications Table

Model	Max. load capacity of each pair(kg)	d_1	d_2	a	b	c	e	f	k	l	n	p	s	t	u	v	w	d_3	d_4	t_1	e_1	e_2	Lifting Pin
DMK15-82A	50000	80	82	300	435	200	140	120	115	360	199	30	30	70	100	45	125	39	58	37	21	19	DB-80EA
DMK15-82B	63000	80	82	345	480	240	170	135	130	405	220	30	30	50	85	50	130	39	58	37	26	22	DB-80EB

Note: When calculating the maximum allowable load capacity, at least two lifting modules should be used under the situations where molds are available or utilized.
For special specifications,customization is available as required.

DMZ G80 Alloy Steel Lifting Lugs

Manufacture and test criteria: Made by custom

Manufacturing process: high-strength chromium-molybdenum alloy steel - forging forming - normalizing - rough machining - quenching and tempering - precision machining

Drawing / Product specification

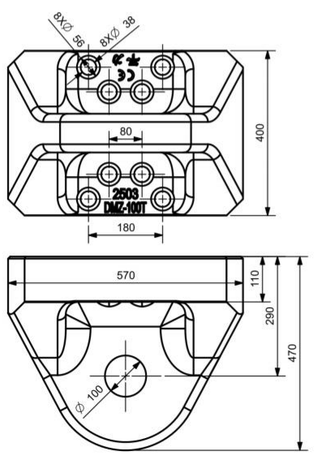

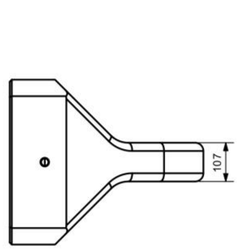



Lifting method	G	A G	β G
Number of lifting points	1	2	2
Lifting angle	0°	0°	β≤45°
Working Load Limit (WLL) t	100	200	140

⚠ WARNING
NEVER EXCEED PUBLISHED WOKING LOAD LIMIT.

DB Lifting Pin

Manufacture and test criteria: EN ISO 12100:2010, Meets VDI 3366(2021-07-00)

Patent No.:ZL 2021 2 1291877.2

Manufacturing process: 42CrMoA alloy steel - rough machining - quenching and tempering - precision machining

Drawing / Product specification

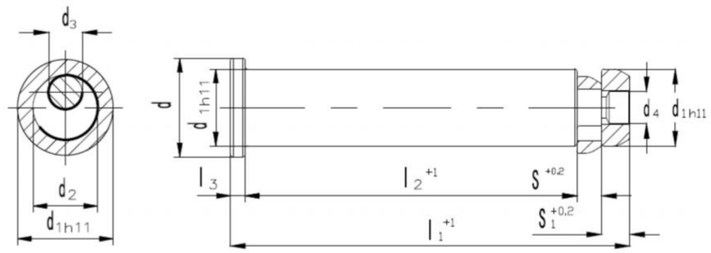



A handle can be added

Specifications Table

Model	Max. load capacity of each pair(kg)	d	d_1	d_2	d_3	d_4	l_1	l_2	l_3	S	S_1	Weight(KG)
DB-30A	6400	40	30	22	13	M10	160.5	135	6	10.5	9	0.88
DB-40A	10000	50	40	28	15	M14	190	155	10	15	10	1.83
DB-50A	16000	60	50	32	20	M20	222	180	11	16	15	3.34
DB-60A	25000	75	60	42	28	M28	247	205	11	16	15	5.38
DB-80A	36000	90	80	56	36	M36	307	257	12	21	17	11.85
DB-32B	12000	40	32	22	13	M10	157.5	132	6	10.5	9	0.96
DB-40B	18000	50	40	28	15	M14	203	170	8	15	10	1.96
DB-50B	28000	60	50	32	20	M20	253	212	10	16	15	3.81
DB-63B	45000	75	63	42	28	M28	308	265	12	16	15	7.4
DB-32C	6400	40	32	22	13	M10	170.5	145	6	10.5	9	1.08
DB-40C	10000	50	40	28	15	M14	221	188	8	15	10	2.15
DB-50C	16000	60	50	32	20	M20	271	230	10	16	15	4.09
DB-63C	25000	75	63	42	28	M28	338	295	12	16	15	8.2
DB-76C	63000	95	76	56	36	M36	420	360	12	21	27	14.5
DB-50D	16000	60	50	32	20	M20	224	182	11	16	15	5.6
DB-63D	25000	75	63	42	28	M28	270	225	14	16	15	7
DB-80EA	50000	95	80	56	36	M36	360	310	12	21	17	13.5
DB-80EB	63000	95	80	56	36	M36	405	355	12	21	17	15.7
DB-40F	4000	50	40	28	15	M14	193	160	8	15	10	
DB-50F	6000	70	50	32	20	M20	266	220	15	16	15	
DB-60F	10000	80	60	42	28	M28	276	230	15	16	15	
DB-63FC	16000	75	63	42	28	M28	275	230	14	16	15	
DB-63F	24000	75	63	42	28	M28	320	275	14	16	15	
DB-70F	15000	90	70	56	36	M36	312	250	15	20	27	
DB-80FA	35000	100	80	56	36	M36	362	300	15	20	27	
DB-80FB	40000	95	80	56	36	M36	402	340	15	20	27	
DB-99F	85000	125	99	56	36	M36	414	350	17	20	27	

Note: When calculating the maximum allowable load capacity, at least two lifting modules should be used under the situations where molds are available or utilized.
For special specifications,customization is available as required.

Installation Instructions

- Reserve a safety space on the two outer sides of the cast iron wall and a installation space on one side.
- The mold lifting bar shall always be inserted into the middle of the mold from the outside.
- The mold lifting bar shall be fully inserted into the safety ring. The stop ring at the front end of the mold lifting bar can clamp the safety ring to make the lifting rod not slide out of the safety ring.

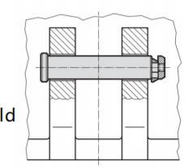

⚠ WARNING
NEVER EXCEED PUBLISHED WOKING LOAD LIMIT.

DB2 Lifting Pin

Manufacture and test criteria: EN ISO 12100:2010, Meets VDI 3366(2021-07-00)

Patent No.:ZL 2021 2 1291877.2

Manufacturing process: 42CrMoA alloy steel - rough machining - quenching and tempering - precision machining

Drawing / Product specification

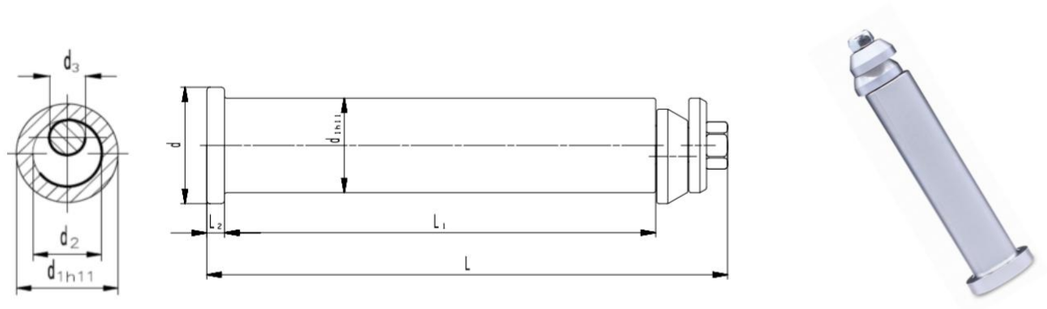

Specifications Table

Model	Max. load capacity of each pair(kg)	d	d_1	d_2	d_3	L	L_1	L_2	Weight(KG)
DB2-16	1200	25	15.6	11	6	103	77	6	0.16
DB2-21	2000	30	20.6	14	7	114	86	6	0.29
DB2-26	4000	35	25.6	17	9	130.5	100	6	0.5
DB2-34	8000	43	33	22	13	168.5	105	6	1.07
DB2-44	14000	53	43	28	15	215	175	8	2.31
DB2-29C	4000	38	29	22	13	178.5	150	6	0.9
DB2-33C	6400	43	33	22	13	200.5	170	6	1.5
DB2-43C	10000	53	43	28	15	235	195	8	2.54
DB2-53C	16000	65	53	32	20	227	180	10	4.8
DB2-53	16000	65	53	32	20	282	235	10	4.68
DB2-63C	26000	78	63	42	28	272.5	215	12	8.4
DB2-63	24000	78	63	42	28	352.5	295	12	8.21
DB2-78	60000	95	78	56	36	421.5	355	14	15.04

Note: When calculating the maximum allowable load capacity, at least two lifting modules should be used under the situations where molds are available or utilized. For special specifications,customization is available as required.

Installation Instructions

- Reserve a safety space on the two outer sides of the cast iron wall and a installation space on one side.
- The mold lifting bar shall always be inserted into the middle of the mold from the outside.
- The mold lifting bar shall be fully inserted into the safety ring. The stop ring at the front end of the mold lifting bar can clamp the safety ring to make the lifting rod not slide out of the safety ring.

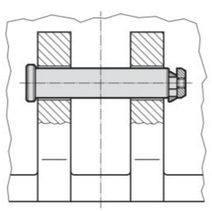

⚠ WARNING

NEVER EXCEED PUBLISHED WOKING LOAD LIMIT.

DB3 Lifting Pin

Manufacture and test criteria: EN ISO 12100:2010, Meets VDI 3366(2021-07-00)

Patent No.:ZL 2021 2 1291877.2

Manufacturing process: 42CrMoA alloy steel – rough machining – quenching and tempering – precision machining

Drawing / Product specification

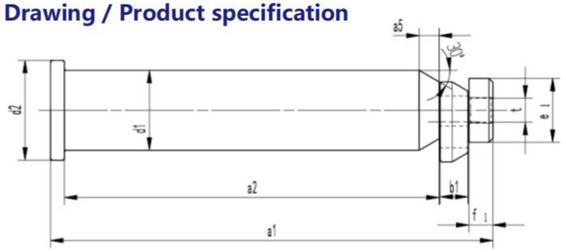





Specifications Table

Model	Max. load capacity of each pair(kg)	d_1	d_2	a_1	a_2	a_5	b_1	f_1	e_1	t	Weight(KG)
DB3-32	3400	32	40	177	155	4	8	8	28	M14×2.0	1.08
DB3-40	5650	40	50	220	188	10	14	10	32	M14×2.0	2.06
DB3-50	8950	50	60	270	230	10	15	15	38	M20×2.5	3.29
DB3-63	14350	63	75	342	295	10	15	15	50	M28×2.0	8.15
DB3-80	26700	80	89	387	335	10	15	20	63	M36×4.0	14.54
DB3-35C	6000	35	45	165	125	5	14	15	30	M14×2.0	1.05
DB3-50C	9500	50	63	230	190	8	14	15	35	M20×2.5	3.37
DB3-63C	20000	63	76	320	280	8	14	15	50	M28×2.0	7.46
DB3-80C	30000	80	89	370	320	15	16.5	17.5	63	M36×4.0	13.9

Note: When calculating the maximum allowable load capacity, at least two lifting modules should be used under the situations where molds are available or utilized. For special specifications,customization is available as required.

DB4 Lifting Pin

Manufacture and test criteria: EN ISO 12100:2010, Meets VDI 3366(2021-07-00)

Patent No.:ZL 2021 3 0593638.1

Manufacturing process: 42CrMoA alloy steel - rough machining - quenching and tempering - precision machining

Drawing / Product specification

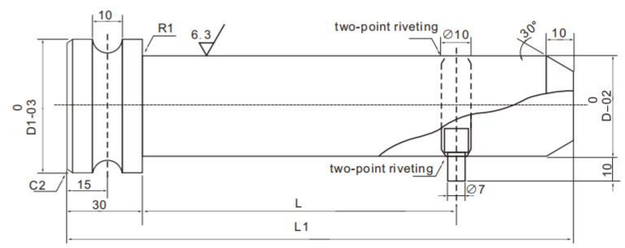



Specifications Table

型号 /Model	D1	L1	L	D	Max. load capacity (kg) of 4 pcs
DB4-25	34	185	135	25	3000
DB4-35	44	240	190	35	5000
DB4-40	50	260	210	40	9000
DB4-50	60	290	240	50	14000
DB4-65	75	330	280	65	17000

Installation Instructions

- Ensure the stopblock faces downward during installation and operation.
- Do not let the flange protrude from the mold during use.

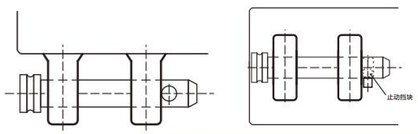

⚠ WARNING

NEVER EXCEED PUBLISHED WOKING LOAD LIMIT.

DMP Lifting Hooks-Plate Type

Manufacture and test criteria:
EN ISO 12100:2010, Meets VDI 3366(2021-07-00)
Patent No.:ZL 2021 3 0357115.7
ZL 2021 2 1293530.1

Manufacturing process: C20(C45) forging forming - normalizing - CNC precision machining

Drawing / Product specification

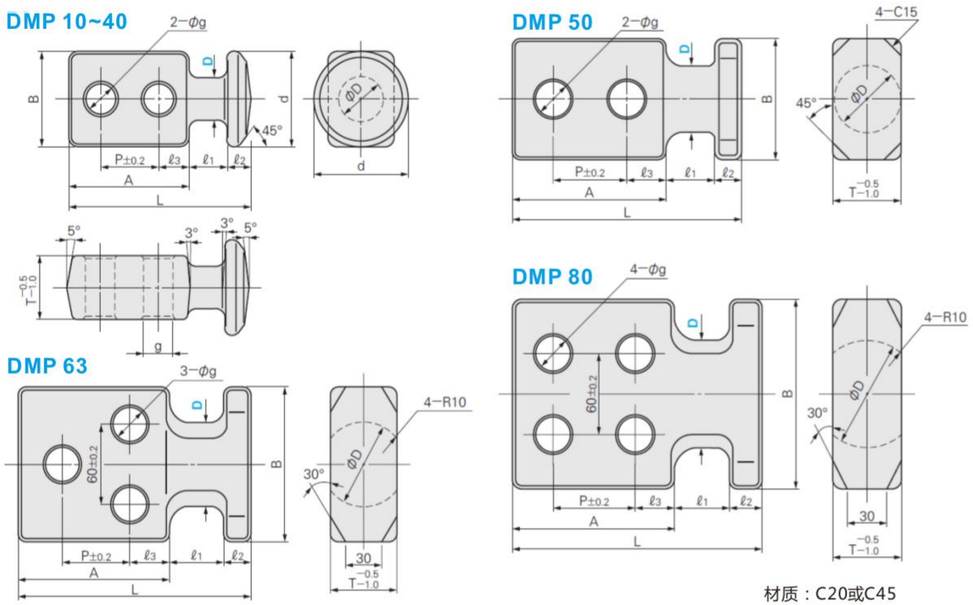



Specifications Table

Model	D	d	B	T	L	A	ℓ_1	ℓ_2	ℓ_3	p	g	Single maximum load (kg)	Weight(KG)
DMP-10	10	28	28	18	50	32	10	8	8	16	7	160	0.13
DMP-12	12	32	32	20	56	38	10	8	10	18	9	360	0.19
DMP-16	16	36	36	24	67	46	13	8	12	22	11	460	0.32
DMP-20	20	40	40	26	88	60	18	10	15	30	14	560	0.5
DMP-25	25	48	48	35	92	60	20	12	15	30	14	670	0.87
DMP-32	32	55	55	40	118	80	25	13	20	40	18	1240	1.44
DMP-40	40	70	70	50	138	93	30	15	24	45	22	1950	2.7
DMP-50	50	-	90	50	170	115	35	20	30	55	26	2800	4.4
DMP-63	63	-	115	50	175	115	40	20	30	55	26	4000	5.8
DMP-80	80	-	140	50	185	120	40	25	30	60	26	5200	7.5

WARNING
NEVER EXCEED PUBLISHED WOKING LOAD LIMIT.

DMPL Lifting Hooks-Large Head Plate Type

Manufacture and test criteria:
EN ISO 12100:2010, Meets VDI 3366(2021-07-00)
Patent No.:ZL 2021 3 0357115.7
ZL 2021 2 1293530.1

Manufacturing process: C20(C45) forging forming - normalizing - CNC precision machining

Drawing / Product specification

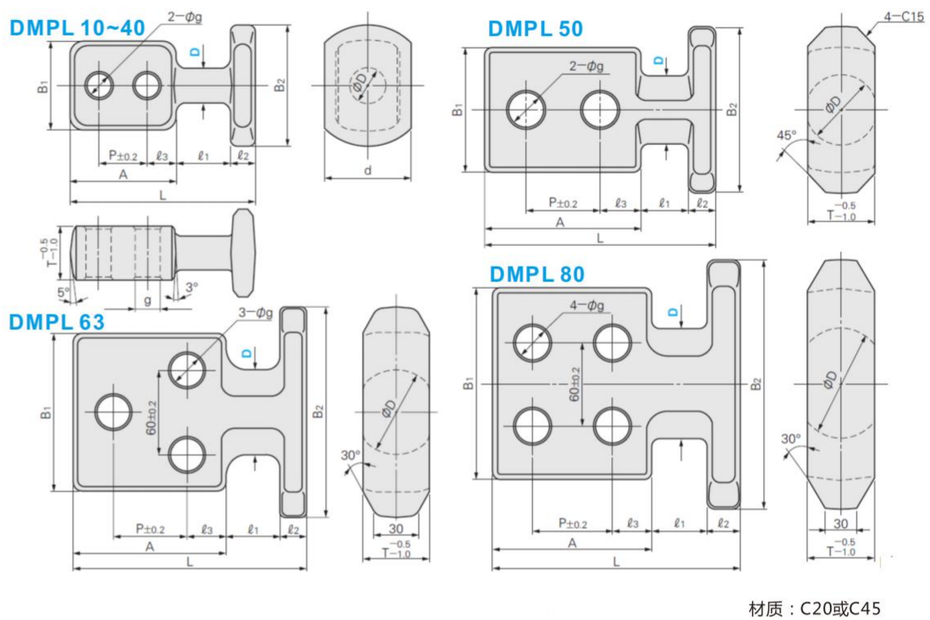



Specifications Table

Model	D	d	B_1	B_2	T	L	A	ℓ_1	ℓ_2	ℓ_3	p	g	Single maximum load (kg)	Weight(KG)
DMPL-10	10	28	28	38	18	61	32	20	9	8	16	7	160	0.17
DMPL-12	12	32	32	44	20	67	38	20	9	10	18	9	360	0.24
DMPL-16	16	36	36	50	24	78	46	20	12	12	22	11	460	0.41
DMPL-20	20	40	40	56	26	97	60	25	12	15	30	14	560	0.61
DMPL-25	25	48	48	68	35	98	60	25	13	15	30	14	670	0.96
DMPL-32	32	55	55	77	40	125	80	30	15	20	40	18	1240	1.73
DMPL-40	40	70	70	100	50	143	93	35	15	24	45	22	1950	3.05
DMPL-50	50	-	90	120	50	170	115	35	20	30	55	26	2800	4.7
DMPL-63	63	-	115	155	50	175	115	40	20	30	55	26	4000	6.2
DMPL-80	80	-	140	180	50	185	120	40	25	30	60	26	5200	8.14

WARNING
NEVER EXCEED PUBLISHED WOKING LOAD LIMIT.

DMH Lifting Hooks(Lifting Studs)

Manufacture and test criteria:
EN ISO 12100:2010, Meets VDI 3366(2021-07-00)

Manufacturing process: C20(C45) forging forming - normalizing - CNC precision machining

Drawing / Product specification

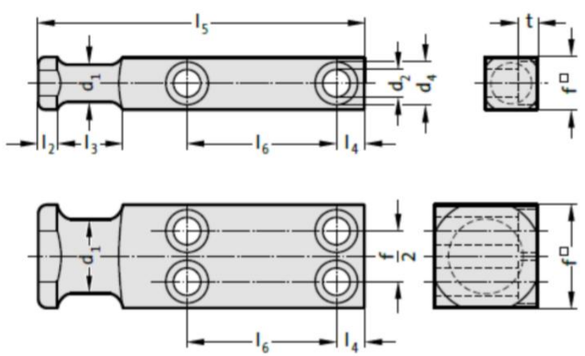



Specifications Table

Model	d_1	d_2	d_4	f	l_2	l_3	l_4	l_5	l_6	t	Number of bolts	Single maximum load (kg)	Weight(KG)
DMH-16	16	9	15	20	6	20	10	80	34	9	2	320	0.19
DMH-20	20	11	18	25	8	25	10	90	37	11	2	630	0.32
DMH-25	25	13.5	20	35	8	30	12	100	38	13	2	1250	0.67
DMH-32	32	17.5	26	40	10	32	16	120	46	17.5	2	2000	1.01
DMH-40	40	22	33	50	10	40	18	140	54	21.5	2	3200	1.8
DMH-50	50	26	40	60	12	45	22	160	59	25.5	2	5000	3.11
DMH-63	63	22	33	80	12	50	20	200	78	21.5	4	8000	7.1
DMH-80	80	26	40	100	15	65	25	250	100	25.5	4	12500	14.7
DMH-100	100	33	48	120	15	80	30	300	125	32	4	20000	25.4

Installation instructions

- When installing, ensure the lifting direction aligns with the axis of the installation bolt.
- Use bolts of grade 12.9 or 10.9 for installation.

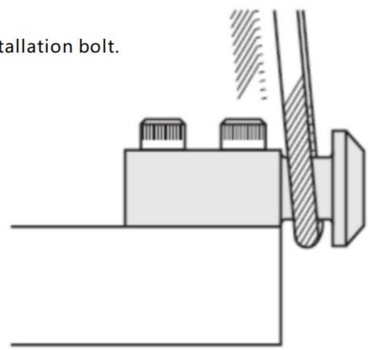

WARNING
NEVER EXCEED PUBLISHED WOKING LOAD LIMIT.

DMHL Lifting Hooks(Lifting Studs)

Manufacture and test criteria:
EN ISO 12100:2010, Meets VDI 3366(2021-07-00)

Manufacturing process: C20(C45) forging forming - normalizing - CNC precision machining

Drawing / Product specification

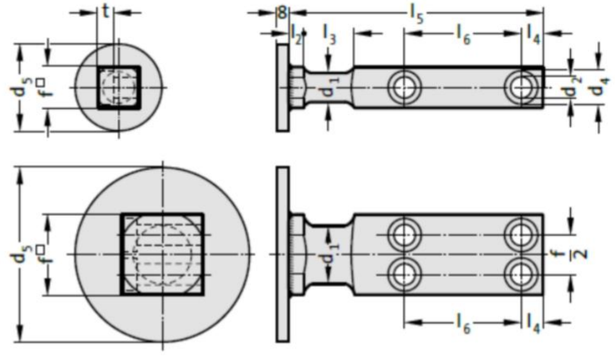



Note: DMHL Plate-type lifting hooks (Lifting studs)with rope-locking protection, fitted with welded anti-slip collars (the anti-slip collars are welded to the hooks)

Specifications Table

Model	d_1	d_2	d_4	d_5*	f	l_2	l_3	l_4	l_5	l_6	t	Number of bolts	Single maximum load (kg)	Weight(KG)
DMHL-16	16	9	15	60	20	6	20	10	80	34	9	2	320	0.35
DMHL-20	20	11	18	70	25	8	25	10	90	37	11	2	630	0.55
DMHL-25	25	13.5	20	70	35	8	30	12	100	38	13	2	1250	0.9
DMHL-32	32	17.5	26	110	40	10	32	16	120	46	17.5	2	2000	1.65
DMHL-40	40	22	33	110	50	10	40	18	140	54	21.5	2	3200	2.45
DMHL-50	50	26	40	150	60	12	45	22	160	59	25.5	2	5000	4.2
DMHL-63	63	22	33	150	80	12	50	20	200	78	21.5	4	8000	8.2
DMHL-80	80	26	40	150	100	15	65	25	250	100	25.5	4	12500	15.8
DMHL-100	100	33	48	150	120	15	80	30	300	125	32	4	20000	26.5

Installation instructions

- When installing, ensure the lifting direction aligns with the axis of the installation bolt.
- Use bolts of grade 12.9 or 10.9 for installation.

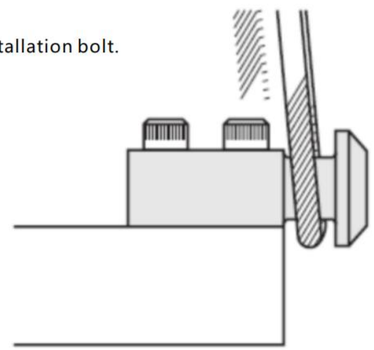

WARNING
NEVER EXCEED PUBLISHED WOKING LOAD LIMIT.

DMU Lifting Hooks-Insert Type

Manufacture and test criteria:
EN ISO 12100:2010, Meets VDI 3366(2021-07-00)

Manufacturing process: C20(C45) forging forming - normalizing - CNC precision machining

Drawing / Product specification

DMU 60A

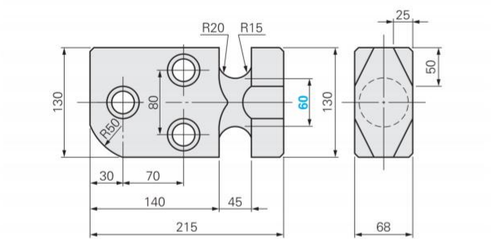

DMU 70A

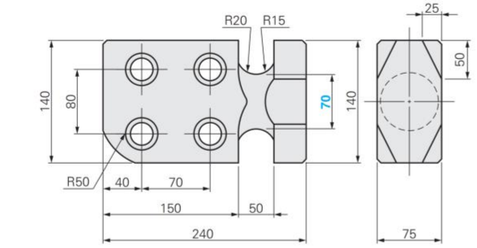

DMU 60B

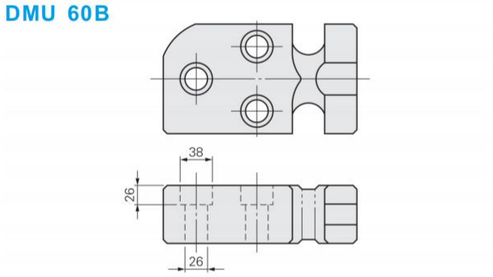



DMU 70B

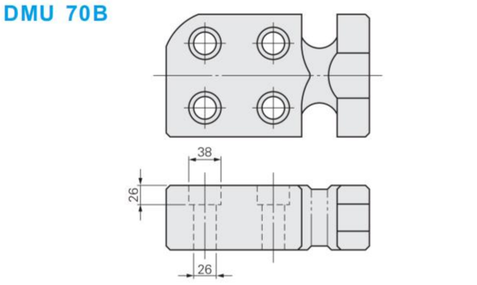



N{kgf}/1个 (SF: 10:1)	Catalog No.	
42170{4300}	DMU	60A
		60B
47070{4800}		70A
		70B

Load (kgf)= load N × 0.101972

DMU For installation bolts (Strength Grade: 10.9)

Length of thread	Catalog No.
	Type M-L
Full thread	CB 24 — 80
60	90 100 120

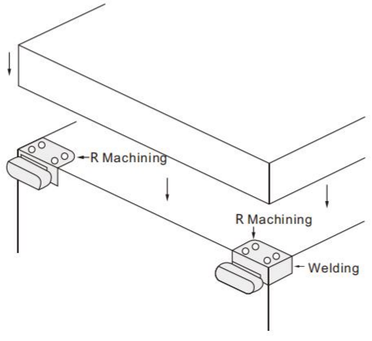

WARNING
NEVER EXCEED PUBLISHED WOKING LOAD LIMIT.

DMPH Lifting Hooks

Manufacture and test criteria:
EN ISO 12100:2010, Meets VDI 3366(2021-07-00)

Manufacturing process: C20(C45) forging forming – normalizing – CNC precision machining

Drawing / Product specification

DMPH 25~50

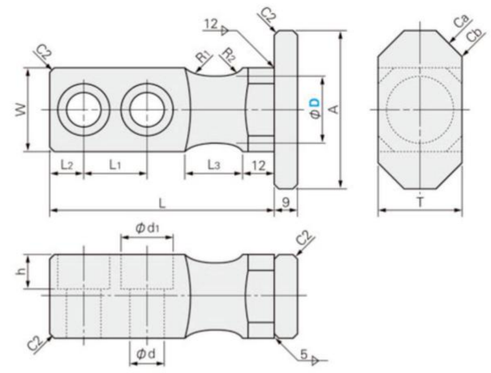



DMPH 60

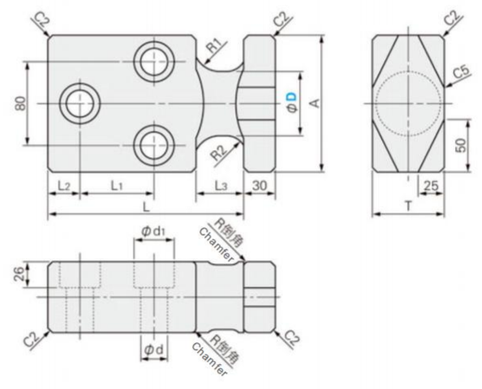

DMPH 70

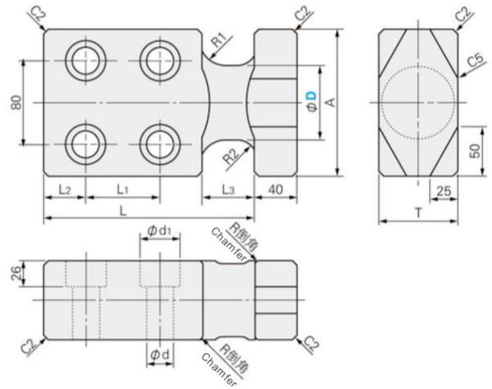

Specifications Table

A	L	L_1	L_2	L_3	W	R_1	R_2	d	d_1	T	Ca	Cb	Allowable load(kgf/1P)	Catalog No.	D
60	85	24	13	22	32	15	10	13	20	32	10	2	800	DMPH	25
80	120	44	16	32	40	15	10	18	26	40	10	2	1500		32
90	140	52	18	40	50	20	12	22	32	50	10	2	2400		40
120	160	59	22	45	60	20	12	26	38	60	20	5	3500		50
130	185	70	30	45	-	20	15	26	38	68	-	-	6000		60
140	200	70	40	50	-	20	15	26	38	75	-	-	8000		70

WARNING
NEVER EXCEED PUBLISHED WOKING LOAD LIMIT.

T-Shaped Bolts

Manufacture and test criteria: EN ISO 12100:2010, EN ISO 3266:2010+A1:2015

Patent No.:ZL 2022 2 3392646.8 ZL 2022 3 0837815.0

Manufacturing process: high-strength alloy steel - forging forming - normalizing - rough machining - quenching and tempering - precision machining

Drawing / Product specification

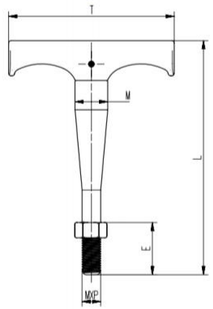

Fixed type: TG



Rotary type: TX

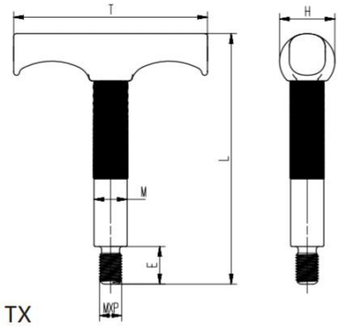

Specifications Table

Model	T	H	L	MXP	Fixed E	Fixed M	Rotary E	Rotary M	Weight(KG)	Lifting method		
										Number of lifting points	1	2
T-M8×1.25	110	27	135	M8×1.25	22	18	13	16	0.4	Maximum load(kg)	600	200
T-M10×1.5	110	27	140	M10×1.5	28	18	17	18	0.4		900	300
T-M16×2.0	140	40	180	M16×2.0	45	28	27	24	1.12		2000	600
T-M20×2.5	140	40	200	M20×2.5	50	28	30	28	1.26		3000	800
T-M24×3.0	140	40	250	M24×3.0	65	28	36	28	1.58		4000	1500

PYC G80 Alloy Steel Extension Rods For Lifting Eyebolt

Manufacture and test criteria: Customized according to various enterprise standards

Manufacturing process: high-strength chromium-molybdenum alloy steel - normalizing - rough machining - quenching and tempering - precision machining

Drawing / Product specification

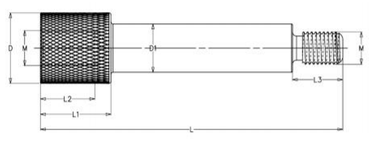





Model	D	D1	L	L1	L2	L3	Lifting method		
							Number of lifting points	1	2
PYC-M8×85	20	14	85	25	15	13	Maximum load(kg)	600	200
PYC-M10×90	25	16	90	30	21	17		900	300
PYC-M12×100	30	20	100	40	23	21		1100	400
PYC-M16×120	35	24	120	40	30	27		2000	600
PYC-M20×120	39	28	120	50	35	30		3000	800
PYC-M24×150	50	34	150	57	43	36		4000	1500

WARNING
NEVER EXCEED PUBLISHED WOKING LOAD LIMIT.

DMA G80 Alloy Steel Lifting Rods With Thread

Manufacture and test criteria: EN ISO 12100:2010, Meets VDI 3366(2021-07-00)

Patent No.:ZL 2018 3 0003917.6

Manufacturing process: high-strength chromium-molybdenum alloy steel - forging forming - normalizing - rough machining - quenching and tempering - precision machining

The lifting rod is a simple lifting tool that facilitates the rapid lifting,transporting,and flipping for the mold and mechanical manufacturing industries during production and processing.It is safe,convenient,and efficient to use.

Drawing / Product specification

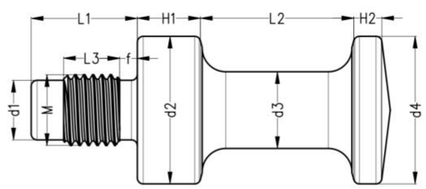



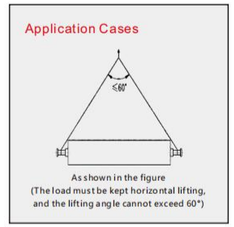

Specifications Table

Model	M	L1	L2	H1	H2	L3	d1	d2	d3	d4	f	Weight(KG)	Single maximum load (kg)
DMA-M10	M10x1.5	17	46	14	6.5	10	7.6	29.5	18	29.5	3	0.28	400
DMA-M12	M12x1.75	21	46	14	6.5	11.5	9.4	29.5	18	29.5	3.5	0.30	500
DMA-M16	M16x2.0	27	46	14	6.5	13	13.0	29.5	18	29.5	4	0.24	900
DMA-M20	M20x2.5	30	51	20	8.5	16	16.4	49.5	26	49.5	5	0.76	1500
DMA-M24	M24x3.0	36	51	20	8.5	19	19.6	49.5	26	49.5	6	0.81	2200
DMA-M30	M30x3.5	45	85	26	11	24	25.0	74.5	38	74.5	7	2.43	3300
DMA-M36	M36x4.0	54	85	26	11	26	30.3	74.5	38	74.5	8	2.6	4000
DMA-M42	M42x4.5	63	120	35	13.5	28	35.6	99.5	50	99.5	9	6.02	5600
DMA-M48	M48x5.0	68	120	35	13.5	31	41.0	99.5	50	99.5	10	6.05	7500

DMN/DMNL Hooks- Bolt Type/Large Head Bolt Type

Manufacture and test criteria:EN ISO 12100:2010, Meets VDI 3366(2021-07-00)

Manufacturing process: high-strength chromium-molybdenum alloy steel - forging forming - normalizing - rough machining - quenching and tempering - precision machining

Drawing / Product specification

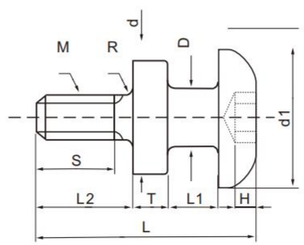

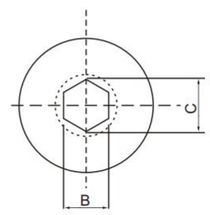



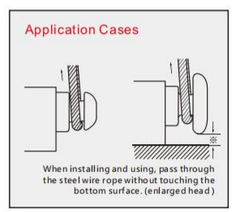

Model	M×P	D	d	DMN d1	DMNL d1	DMN L1	DMNL L1	L2	S	T	DMN L	DMNL L	R	H	B	C	Single maximum load (kg)
DMN(L)-M10	10×1.5	13	32	32	42	10	18	20	16	8	46	54	1.5	5	8	9.2	250
DMN(L)-M12	12×1.75	16	36	36	48	13	20	24	20	10	57	64	1.5	6	10	11.7	360
DMN(L)-M16	16×2.0	20	40	40	52	18	25	30	25	13	75	82	2	9	14	16.3	680
DMN(L)-M20	20×2.5	25	48	48	62	20	28	37	32	16	90	98	2	12	17	19.8	1060
DMN(L)-M24	24×3.0	32	58	58	76	25	33	47	40	20	111	119	2.5	13	19	22.1	1530
DMN(L)-M30	30×3.5	36	68	68	88	30	40	56	48	22	131	141	3	16	22	25.6	2430
DMN(L)-M36	36×4.0	40	78	78	100	30	40	68	58	25	148	158	3	18	27	31.4	3550

WARNING
NEVER EXCEED PUBLISHED WOKING LOAD LIMIT.

DMB Support Bolts

Manufacture and test criteria: EN ISO 12100:2010, Meets VDI 3366(2021-07-00)

Manufacturing process: high-strength chromium-molybdenum alloy steel - forging forming - normalizing - rough machining - quenching and tempering - precision machining

The support bolts is a simple lifting tool that facilitates the rapid lifting,transporting,and flipping for the mold and mechanical manufacturing industries during production and processing.It is safe,convenient,and efficient to use.

Drawing / Product specification

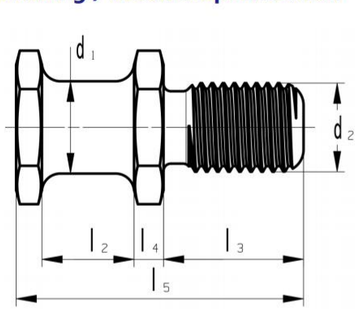

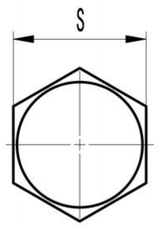



Specifications Table

Model	d_1	d_3	l_2	l_3	l_4	l_5	S	Single maximum load (kg)
DMB-M16	16	M16	20	28	5	58	24	320
DMB-M20	20	M20	22	34	6	68	30	500
DMB-M24	25	M24	25	38	8	78	36	1000
DMB-M30	32	M30	32	45	10	95	41	1500
DMB-M36	40	M36	40	56	12	118	50	2500

Application Cases

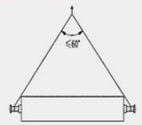

As shown in the figure
(The load must be kept horizontal lifting, and the lifting angle cannot exceed 60°)

Lifting tools: When using support bolts for lift workpieces, only soft-connection lifting tools such as standard lifting straps and standard chains wrapped with fabric are allowed for lifting. The lifting tools should be in full contact as much as possible to prevent relative displacement.
The use of hooks and other hard-connected lifting tools is not allowed.

DMC Cast-in Lifting Bolts

Manufacture and test criteria: EN ISO 12100:2010

Manufacturing process: 42CrMoA alloy steel – normalizing – rough machining – quenching and tempering – precision machining

Drawing / Product specification

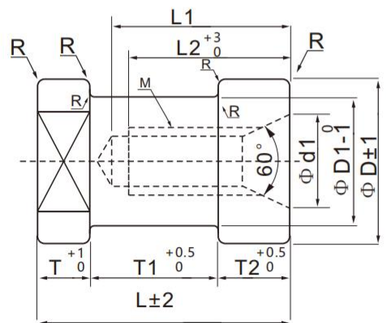

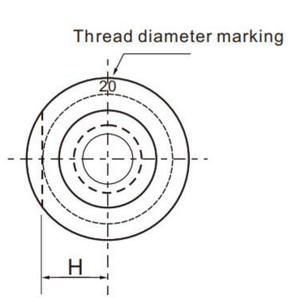



Specifications Table

Model	M×P	D	D1	d1	L2	L1	L	T	T1	T2	H	R	Load capacity of lifting bolt (kg)	Load capacity of eyebolt (1 pcs vertically) (kg)	Load capacity of eyebolt (45°*2 pcs) (kg)
DMC-M12	12×1.75	38	28	18	30	40	55	10	30	15	14	2	380	220	220
DMC-M16	16×2.0	46	36	22	35	45	55	10	30	15	18	2	675	450	450
DMC-M20	20×2.5	48	38	28	45	55	70	15	35	20	19	2	900	600	600
DMC-M24	24×3.0	55	45	36	55	65	85	20	45	20	22.5	2	1360	1000	1000
DMC-M30	30×3.5	65	52	42	65	75	95	25	50	20	26	3	2020	1700	1700
DMC-M36	36×4.0	85	70	48	75	90	110	30	55	25	35	3	5960	2300	2300

⚠ WARNING

NEVER EXCEED PUBLISHED WOKING LOAD LIMIT.

DMD Cast-in Lifting Hooks

Manufacture and test criteria: EN ISO 12100:2010

Manufacturing process: C20(C45) forging forming - normalizing - CNC precision machining

Drawing / Product specification

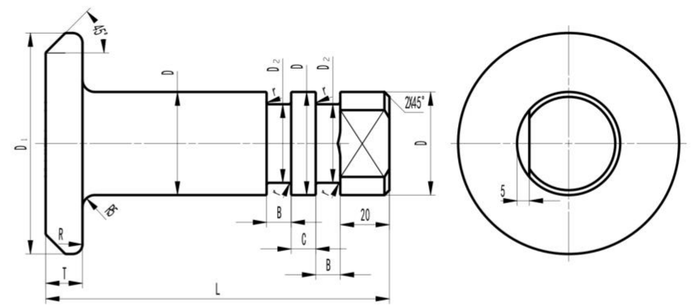

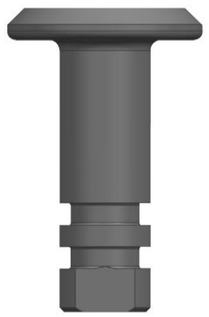

Specifications Table

Model	D	D_1	D_2	L	T	B	C	R	r	Single maximum load (kg)
DMD-42	42	90	32	140	15	10	10	4	1	2090
DMD-50	50	120	40	175	20	15	15	5	2	3270
DMD-60	60	120	50	205	20	15	25	5	2	5380
DMD-70	70	130	60	230	25	20	25	5	2	6410

DMF/DMFL Cast-in Lifting Bolts

Manufacture and test criteria: EN ISO 12100:2010

Manufacturing process: C20(C45) forging forming - normalizing - CNC precision machining

Drawing / Product specification

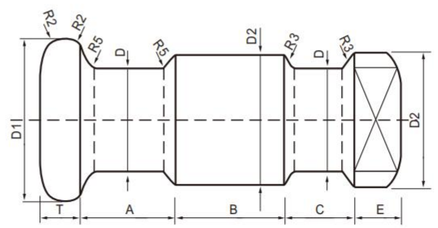

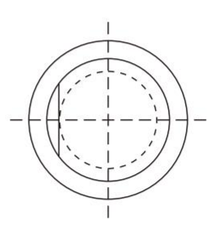



Specifications Table

Model	D	DMF(D1)	DMFL(D1)	D2	T	A	B	C	E	Single maximum load (kg)
DMF(L)-25	25	46	60	36	12.6	25	30	15	16.6	810
DMF(L)-32	32	55	70	42	13.1	30	40	20	16.8	1340
DMF(L)-36	36	60	80	46	18.5	35	45	25	17	1690
DMF(L)-40	40	70	90	55	18.9	35	60	30	17.4	2090
DMF(L)-50	50	90	120	70	25.2	35	70	40	18.1	3270
DMF(L)-70	70	120	140	100	31.1	40	80	40	19.4	6410

⚠ WARNING

NEVER EXCEED PUBLISHED WOKING LOAD LIMIT.

PL G80 Chain Slings

Manufacture and test criteria:
EN ISO 12100:2010,EN 818-4:1996+A1:2008

Drawing / Product specification



Model	Chain	1-leg	2-leg		3-leg and 4-leg		Endless chain in choker hitch
	Hoisting diagram	90°	β		β	β	
	φ		0 °< β ≤45°	45°< β≤60°	0 °< β ≤45°	45°< β≤60 °	
	mm	WLL/t	WLL/t	WLL/t	WLL/t	WLL/t	WLL/t
PL-06	6	1.12	1.6	1.12	2.36	1.7	1.8
PL-08	8	2	2.8	2	4.25	3	3.15
PL-10	10	3.15	4.25	3.15	6.7	4.75	5
PL-13	13	5.3	7.5	5.3	11.2	8	8.5
PL-16	16	8	11.2	8	17	11.8	12.5
PL-18	18	10	14	10	21.2	15	16
PL-20	20	12.5	17	12.5	26.5	19	20
PL-22	22	15	21.2	15	31.5	22.4	23.6
PL-26	26	21.2	30	21.2	45	31.5	33.5
PL-32	32	31.5	45	31.5	67	47.5	50

WARNING: Check the minimum WLL of each component,including the chain,master link and master link assembly as they determine the sling's overall lifting compacity. Since some master links or master link assemblies have relatively lower load-bearing capacity).
The WLL shall be halved for asymmetrically lifting.

WLL REDUCTION

CHAIN SLING TEMPERATURE	REDUCTION IN WORKING LOAD LIMIT
–40℃– 200℃	None reduced
200℃– 300℃	Reduced by 10%
300℃– 400℃	Reduced by 25%
above 400℃	Do not use !!

Pingli G80 Rigging Instruction Plate





⚠ WARNING
NEVER EXCEED PUBLISHED WOKING LOAD LIMIT.

G80 Master Link Assembly / Self Locking Hooks

Drawing / Product specification



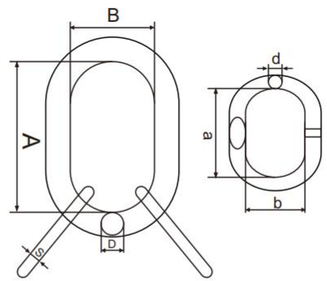



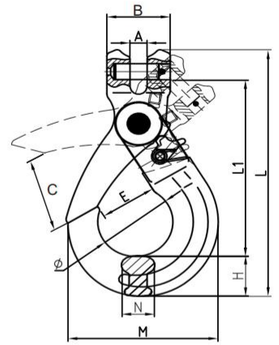

PL01-G80 EUROPEAN TYPE G80 MASTER LINK ASSEMBLY

Specifications Table

Model	Fit with G80 chain Diameter MM 3-leg or 4-leg chain	Weight(KG)	WLL/t	Dimension					
				A	B	D	a	b	d
PL01-6	6	1.18	2.36	135	75	18	54	25	13
PL01-8	8	2.2	4.25	160	90	22	70	38	16
PL01-10	10	3.4	6.7	180	100	26	85	40	18
PL01-13	13	6.1	11.2	200	110	32	115	50	22
PL01-16	16	9.98	17	260	140	36	140	65	26
PL01-18	18	18.9	21.2	340	180	45	180	100	32
PL01-20	20	22.6	26.5	350	190	50	180	100	32
PL01-22	22	25.2	31.5	350	190	50	180	100	36
PL01-26	26	35.2	45	400	200	56	180	100	40
PL01-28	28	47	50	430	220	63	180	100	45
PL01-32	32	66.46	67	460	250	72	200	110	50

- The breaking load is 4 times the Working Load Limit(WLL).
- The WLL is based on a lifting angle of 0° to 45° when using a three-leg or four-leg rigging.
- Warning: Never exceed the specified WLL during operation.

PL05-G80 Improved Self Locking Hooks

Specifications Table

Model	Fit with G80 chain size	Weight(KG)	WLL/t	Dimension									
				A	B	C	E	L1	L	H	φ	N	M
6-8	6	0.44	1.12	8±0.5	32±1	32±2	28±1	99±3	134±3	20±1	34±1	15±0.5	73±2
7/8-8	8	0.8	2	9.5±0.5	38.5±1	40±3	35±1	119±3	162±3	26±1	44±1	20±0.5	91±2
10-8	10	1.38	3.15	12.5±0.5	46±1	48±3	45±2	142±3	195±3	30±1.5	58±2	26±1	108±2
13-8	13	2.81	5.3	15±0.5	59±1	57±3	52.5±2	179±4	248±4	40±1.5	70±2	33±1	142±3
16-8	16	6	8	18.5±0.5	77±1.5	65±4	63±2	225±4	310±4	50.5±2	86±2	38±2	168.6±3
18-8	18	7.25	12.5	24±1	81±1.5	82±4	82±2	238±5	335±5	55±2	97±2	50±2	185±4
20-8	20	7.25	12.5	24±1	81±1.5	82±4	82±2	238±5	335±5	55±2	97±2	50±2	185±4
22-8	22	12.8	15	25±1	97.5±2	80±5	76±3	277±5	392±5	67±2	98±3	52±2	202±4
26-8	26	21.8	21.2	30±1.5	118±2	109±5	96±4	312±6	449±6	75±3	110±4	60±3	239±5
32-8	32	49.6	31.5	35±1.5	150±2	131±6	131±4	416±6	590±6	97±3	164±4	79.5±3	329±5

- The breaking load is 4 times the Working Load Limit(WLL).
- Warning: Never exceed the specified WLL during operation.

⚠ WARNING
NEVER EXCEED PUBLISHED WOKING LOAD LIMIT.

G80 Master Link / Connecting Link

Drawing / Product specification

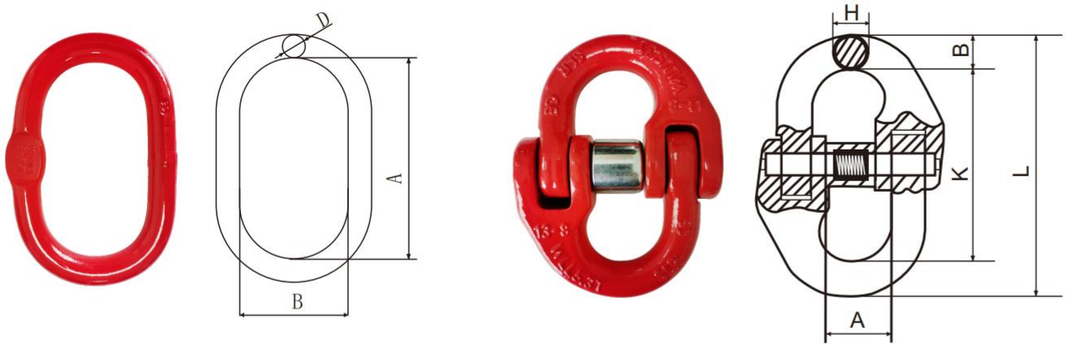

PL02-G80 European Standard Master Link

Specifications Table

Model	Fit with G80 chain size		Weight(KG)	WLL/t	Dimension		
	Single-leg sling MM	Dual-leg sling MM			A	B	D
PL02-76	7	6	0.34	1.6	110	60	13
PL02-87	8	7	0.54	2.12	110	60	16
PL02-108	10	8	0.82	3.15	135	75	18
PL02-1310	13	10	1.5	5.3	160	90	22
PL02-1613	16	13	2.3	8	180	100	26
PL02-1816	18	16	3.95	11.2	200	110	32
PL02-2018	20	18	6.34	14	260	140	36
PL02-2220	22	20	8.96	17	300	160	40
PL02-2622	26	22	12.8	21.2	340	180	45
PL02-3226	32	26	16.55	31.5	350	190	50
PL02-3632	36	32	23.28	45	400	200	56
PL02-4036	40	36	32	56	430	220	63
PL02-72MM	45	40	45.76	63	460	250	72
PL02-80MM	45	45	62	85.46	500	270	80

- The breaking load is 4 times the Working Load Limit(WLL).
- The WLL is based on a lifting angle of 0° to 45° when using a double-leg rigging configuration.
- Warning: Never exceed the specified WLL during operation.

PL03-G80 CONNECTING LINK

Specifications Table

Model	Fit with G80 chain size	Weight(KG)	WLL/t	Dimension				
				A±1.5	B±1	L±2.5	K±2	H±1
PL03-6	6	0.08	1.12	15	7.5	58	42	7
PL03-7/8	7/8	0.146	2	20.5	9.5	79.5	60.5	8.5
PL03-8	8	0.16	2	20.5	9.5	79.5	60.5	8.5
PL03-10	10	0.3	3.15	26	12	90.5	68	11.5
PL03-13	13	0.65	5.3	30	15	117	87	15
PL03-16	16	1.15	8	35	19.8	148	108.4	19.8
PL03-18	18	1.84	10	38	21	154	112	21
PL03-20	20	2.1	12.5	41	24	169.5	121.5	24
PL03-22	22	2.87	15	49.5	26	193.5	141.5	26
PL03-26	26	4.5	21.2	57.5	31	220	158	30
PL03-32	32	8.21	31.5	67.5	38	281	205	37

- The breaking load is 4 times the Working Load Limit(WLL).
- Warning: Never exceed the specified WLL during operation.

WARNING
NEVER EXCEED PUBLISHED WOKING LOAD LIMIT.

G80 Lifting Chain

Drawing / Product specification



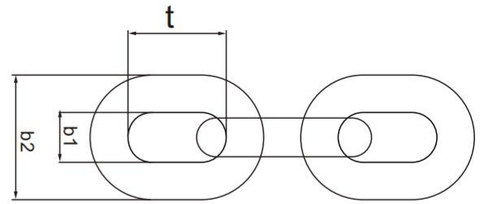

PL04-G80 EN818-2 Lifting Chain

Specifications Table

ITEM NO	WLL/t	D(mm)	t(mm)	b1(mm)min	b2(mm)max	Weight(kg/M)
6mm	1.12	6	18	7.8	22.2	0.8
8mm	2	8	24	10.4	29.6	1.4
10mm	3.15	10	30	13	37	2.2
13mm	5.3	13	39	16.9	48.1	3.8
16mm	8	16	48	20.8	59.2	5.7
18mm	10	18	54	23.4	66.6	7.3
20mm	12.5	20	60	26	74	9
22mm	15	22	66	28.6	81.4	10.9
26mm	21.2	26	78	33.8	96.2	15.2
32mm	31.5	32	96	41.6	118	23

- The proof test is conducted under 2.5 times the working load limit ,the breaking force is 4 times the working load limit.
- Warning: Never exceed the specified WLL during operation.

Storage Rack for Lifting Eyebolts

Patent No.:ZL 2019 2 0456983.8 ZL 2019 3 0148526.8

Drawing / Product specification







- Customization is available to meet customer requirements.
- The special storage rack for lifting eyebolts is designed to facilitate the safe and standardized management of the eyebolts in enterprises/factories.It is also supplied with standard safety operation guidelines as learning references for employees which can effectively improve the safety awareness of them to avoid violating operation, reduce potential safety hazards and prevent against safety incidents.

WARNING
NEVER EXCEED PUBLISHED WOKING LOAD LIMIT.