Motorpel

Construction Equipment Parts & Diesel Engine Parts for OEM & Replacement

Since 1998

QUALITY ASSURED FIRM ISO 9001 CQC

ISO TS16949

TÜV SÜD ISO/TS 16949

Motorpel

+86-22-24125885 info@motorpel.com

Company Introduction

Motorpel, a well-known manufacturer and exporter, is specialized in construction spare parts and diesel Engine parts for Caterpillar®, Komatsu®, Cummins®, as well as Deutz® and Perkins®, Since 1998. We have been exporting these parts to over 20 countries such as Germany, USA, UK, Poland, Hungary, Russia, Brazil, Chile, Iran, Turkey, Egypt, South Africa, etc.

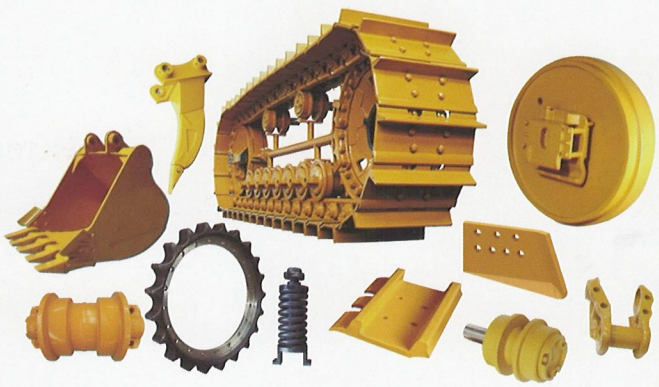

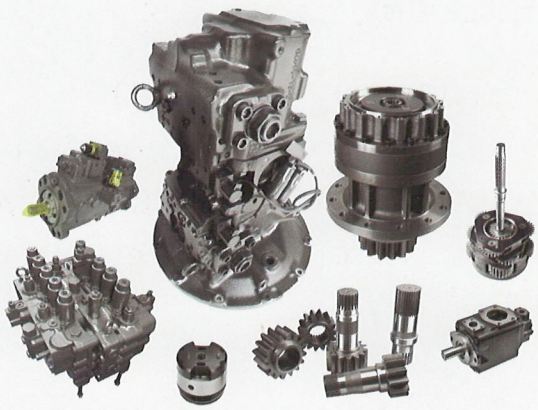

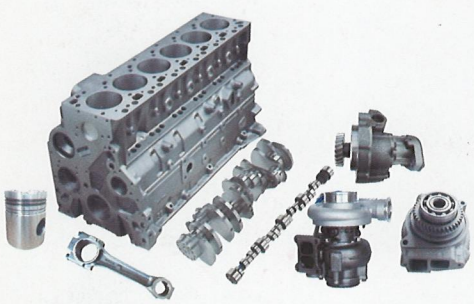



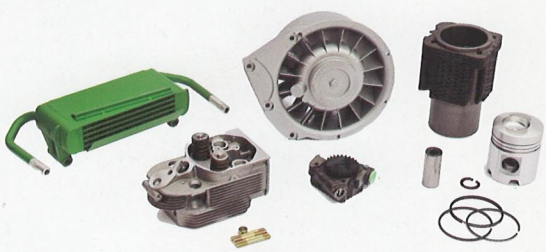

Komatsu® **Caterpillar®** **Cummins®** **Deutz®** **Perkins®**

Motorpel

Main Products

Undercarriage & G.E.T:

Chain, Idler and Roller, Sprocket, Sprocket Segment, Track Shoe, Track Link, Recoil Spring, Cutting Edge, End Bit, Shank, Ripper, Bucket Teeth, Point, Nut and Bolt

Hydraulic Applications & Transmission:

Hydraulic Pump, Valve, Hydraulic Cylinder, Travel Motor and Final Drive, Swing Motor and Swing Machinery, Pilot Pump & Gear Pump,
Torque Converter, Planetary Transmission, Final Drive Gear, Steering Clutch, U-Joint, Friction Disk, Brake

Engine Parts:

Cylinder Block, Cylinder Head, Crankshaft, Camshaft, Liner, Piston, Piston Pins, Piston Ring, Valve, Turbocharger, Connecting Rod, Gasket Kit, Oil Pump, Water Pump, Fuel Injector Nozzle, Starter, Filter, etc.

	Engine Model
Komatsu®	S6D95, S6D102, S6D105, S6D125, S6D140, S6D155
Caterpillar®	3304, 3306, 3406, 3412, C7, C9, C13, C15
Cummins®	4BT, 6BT, 6CT, ISF2.8, ISF3.8, ISL, ISLe, ISX, ISZ, ISBe, ISCe, ISDe, QSB, QSC, M11, ISM, QSM, N14, NT855, K19, K38, K50
Deutz®	912, 913, 914, 413, 513, 511, 1013, 2012, 2013, 1015, 2015, 1011, 2011, 226
Perkins®	1004, 1006, 1104, 1106, 3.152, 4.236, 4.248, 400

All the trade marks are cited only for reference, not belong to Motorpel.

Quality Replacement Parts For Construction Equipment

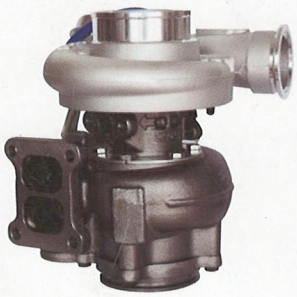

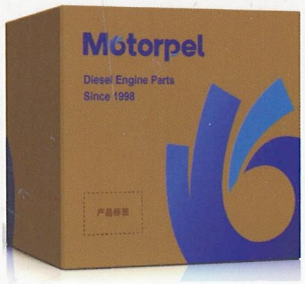



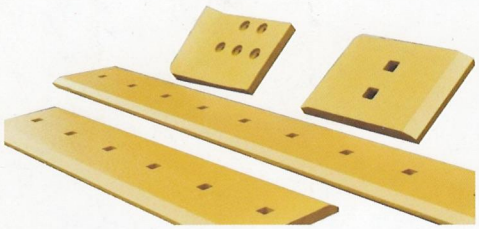

Motorpel

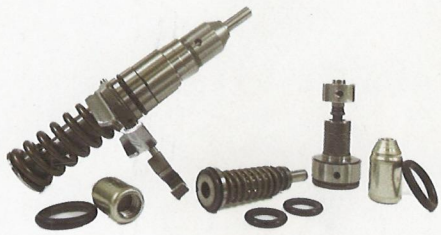

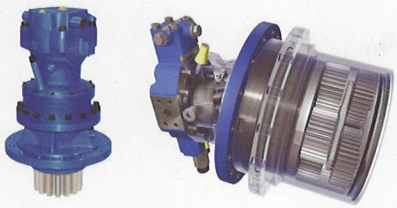





Add.: No.125 Bawei Road Greatwall BLDG 12#1-1402,Hedong District,Tianjin,P.R.China 300171
Tel.: +86-22-24125885 Fax.: +86-22-24125500
E-mail: info@motorpel.com komcat@motorpel.com
Web:www.motorpel.com