• K06

MINI excavator

LEKING



* Thickened roll cage for safe operation.



* Protects the cylinder from collisions and extends its service life.



* Thickened bulldozer blade, durable and robust.





* Ergonomic joystick, comfortable for long driving sessions.



* The foot pedal can be swung to the side for smoother operation.



* Equipped with a Loncin G300 engine, providing strong power.



* Built-in cooling fan provides excellent heat dissipation.



* The three-sided cast iron counterweight makes the machine more stable.



* The tailless design allows for easy operation in confined spaces.



* The boom can swing to the side, allowing for flexible operation even in narrow spaces.



* Load-sensitive multi-way valve, capable of performing multiple combined actions.

Main Technical Parameters of Mini Excavators

Engine		Hydraulic system	
Engine model	Loncin G300	Travel motor model	BM10-310
Hydraulic pump model	Double gear pump	Max.flow (L/min)	20
Fuel	Gasoline	Machine weight	
Rated power(kw/r/min)	6.8/3600	Operating weight(kg)	650
Travel system		Bucket	
Travel speed (km/h)	2	Bucket capacity(m^3)	0.015
Swing speed (r/min)	12	Dimensions (mm)	
Max. climbing degree (%)	50	Overall length	1866
Oil capacity		Overall width	690
Fuel tank capacity (L)	5.5	Overall height (to top of boom)	1657
Hydraulic oil tank capacity (L)	13	Overall height (to top of cab)	2200
Working range (mm)		Counterweight ground clearance	355
Max. digging height	2136	Min. ground clearance	151
Max. dumping height	1408	Tail swing radius	688
Max. digging depth	1100	Track ground length	1050
Max. vertical wall digging depth	1100	Track length	1120
Max. digging reach	2267	Track gauge	390
Max. digging reach at ground level	2267	Track width	690
Min. swing radius	1177	Track shoe width	150
Distance between center of rotation and tail length	688	Turntable width	680
Deflection angle left°	75°		
Deflection angle right	57°		

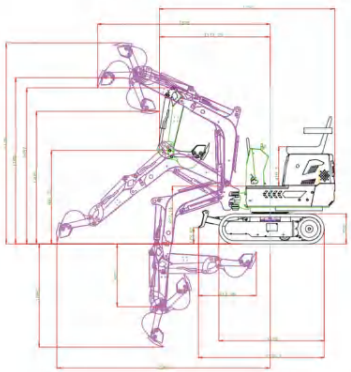

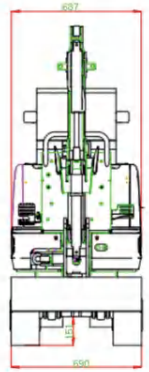

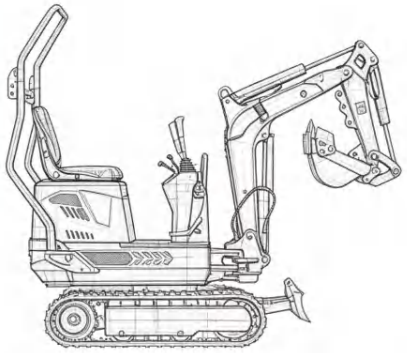







• K10

MINI excavator



• Avoid the impact zone and reduce cylinder damage





• Internationally Certified High-Strength Structure: Ensuring Personnel Safety



• Real-time monitoring, comfortable operating platform



• The widened blade extends laterally to block flying debris, thereby reducing damage to the crawler undercarriage



• Standard side swing boom for flexible operation in confined spaces.



• Equipped with a powerful engine featuring low fuel consumption and low noise levels.

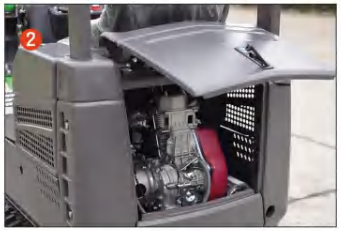

• The openable rear hood is easy to operate and saves manpower



• Dual gear pump with independent dual-circuit oil supply for superior combined movements



• Rubber tracks protect road surfaces and enable low-noise operation; combined with a deep tread design, they provide superior grip.



• Thickened Lumbar Support, Reduce vibration



• Provide the flow required for the load without excess flow overflow, achieving energy savings in the system

LEKING

Main Technical Parameters of Mini Excavators

Engine		Hydraulic system	
Model	KOOP	Travel motor model	BM10-310
Hydraulic pump model	Double gear pump	Max.flow (L/min)	30
Fuel	Diesel	Machine weight	
Rated power(kw/r/min)	7.5	Operating weight(kg)	1050
Travel system		Bucket	
Travel speed (km/h)	1.5	Bucket capacity(m^3)	0.025
Swing speed (r/min)	10	Dimensions (mm)	
Max. climbing degree (%)	58	Overall length	2880
Oil capacity		Overall width	820-1020
Fuel tank capacity (L)	10	Overall height (to top of boom)	2118
Hydraulic oil tank capacity (L)	15	Overall height (to top of cab)	2265
Working range (mm)		Counterweight ground clearance	430
Max. digging height	2771	Min. ground clearance	80
Max. dumping height	1917	Tail swing radius	821
Max. digging depth	1665	Track ground length	1250
Max. vertical wall digging depth	1593	Track length	1393
Max. digging reach	3189	Track gauge	390
Max. digging reach at ground level	3189	Track width	640-840
Min. swing radius	1387	Track shoe width	180
Distance between center of rotation and tail length	821	Turntable width	820
Deflection angle left°	56°		
Deflection angle right	57°		

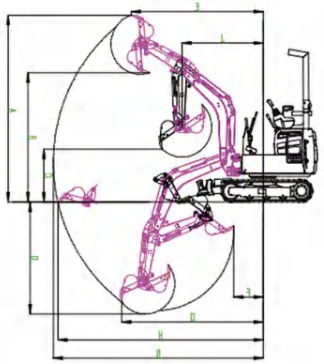

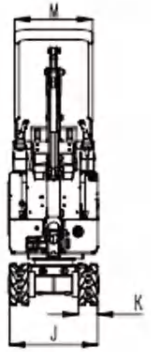

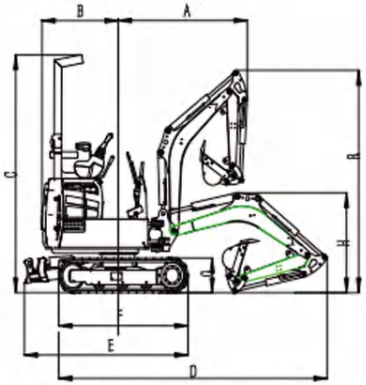







• K13

MINI excavator



• Thickened roll cage for safe operation.



• Protects the cylinder from collisions and extends its service life.



• Thickened bulldozer blade, durable and robust.





• Ergonomic joystick, comfortable for long driving sessions.



• The foot pedal can be swung to the side for smoother operation.



• Equipped with a Kubota Z482 engine, providing strong power.



• The chassis is extendable, facilitating entry and exit in narrow spaces.



• Load-sensitive multi-way valve, capable of performing multiple combined actions.



• The tailless design allows for easy operation in confined spaces.

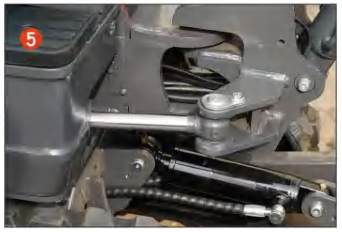

• The boom can swing to the side, allowing for flexible operation even in narrow spaces.



• Hydraulic pilot operation, effortless work.

LEKING

Main Technical Parameters of Mini Excavators

Engine		Hydraulic system	
Model	Kubota Z482	Multi-way valve	Load sensing valve
Hydraulic pump model	Piston pump	Max.flow(L/min)	30
Fuel	Diesel	Machine weight	
Power	8.2	Operating weight(kg)	1250
Travel system		Bucket	
Travel speed (km/h)	1.8-4	Bucket capacity(m³)	0.025
Swing speed (r/min)	12	Dimensions (mm)	
Max. climbing degree (%)	58	Overall length	2888
Oil capacity		Overall width	820-1020
Fuel tank capacity (L)	15	Overall height (to top of boom)	2118
Working pressure	19.5	Overall height (to top of cab)	2265
Working range (mm)		Counterweight ground clearance	430
Max. digging height	2771	Min. ground clearance	80
Max. dumping height	1917	Track ground length	1250
Max. digging depth	1665	Track length	1393
Max.vertical wall digging depth	1593	Track width	820-1020
Max. digging reach	3189	Track shoe width	180
Max. digging reach at ground level	3189	Turntable width	820
Min. swing radius	1387	Tail swing radius	821

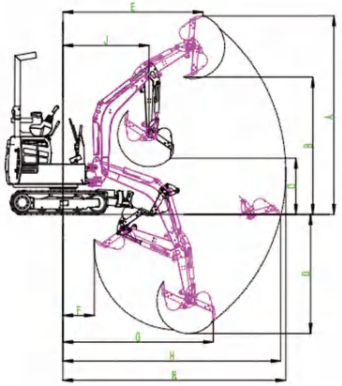

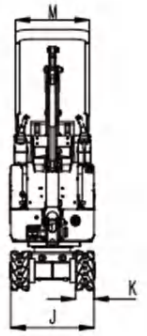

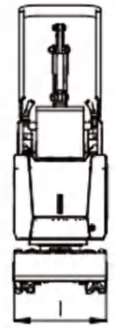







• K20

MINI excavator



* Thickened steel tube rollover canopy, reliable protection.



* Hidden oil pipe, neat and beautiful appearance.



* Thickened bulldozer blade, durable and robust.





* Hydraulic safety lock, ensuring safe operation.



* Foot pedal controls the breaker pipeline and dozer blade.

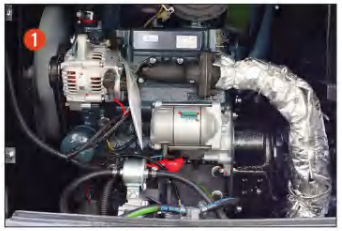

* Equipped with Laidong 385 engine, stable, fuel-efficient and durable.



* The dual-speed motor offers low and high-speed settings to accom-

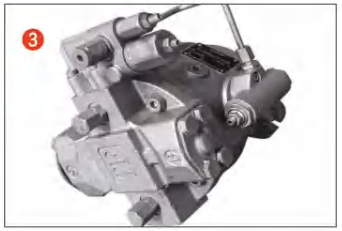

* Equipped with a plunger pump, it effortlessly handles the high-load demands of excavator operations.



* The tailless design allows for easy operation in confined spaces.



* The boom can swing to the side, allowing for flexible operation even in narrow spaces.



* Load-sensitive multi-way valve, capable of performing multiple combined actions.

LEKING

Main Technical Parameters of Mini Excavators

Engine		Hydraulic system	
Model	Laidong 385 / Kubota D902	Hydraulic pump model	Piston pump
Working pressure(Mpa)	19.5	Max.flow (L/min)	38
Fuel	Diesel	Machine weight	
Rated power(kw/r/min)	18.2/11.3	Operating weight(kg)	1850
Travel system		Bucket	
Travel speed (km/h)	1.8-4.0	Bucket capacity(m^3)	0.04
Swing speed (r/min)	12	Dimensions (mm)	
Max. climbing degree (%)	58	Overall length	2880
Oil capacity		Overall width	980-1280
Fuel tank capacity (L)	20	Overall height (to top of boom)	2118
Hydraulic oil tank capacity (L)	20	Overall height (to top of cab)	2265
Working range (mm)		Counterweight ground clearance	430
Max. digging height	2771	Min. ground clearance	80
Max. dumping height	1917	Tail swing radius	821
Max. digging depth	1665	Track ground length	1250
Max. vertical wall digging depth	2300	Track length	1393
Max. digging reach	3189	Track gauge	640 (840 when extended)
Max. digging reach at ground level	3189	Track width	980-1280
Min. swing radius	1387	Track shoe width	180
Distance between center of rotation and tail length	821	Turntable width	820
Deflection angle left°	56°		
Deflection angle right	57°		

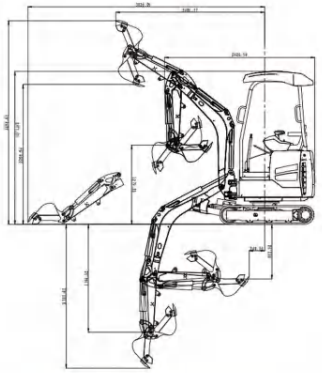

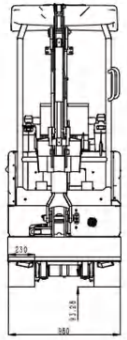

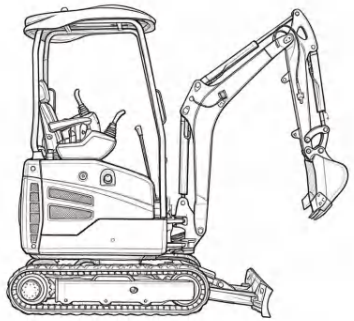







• K25

MINI excavator



• Open column design, high-strength anti-tip roof



• High-strength wear-resistant bucket for extended service life



• Multi-function dozer shovel for efficient leveling and backfilling





• Lightweight and Precise Handle Control Device



• High-strength steel tracks, wear-resistant and impact-resistant



• Equipped with a powerful Yanmar engine,



• Lift the lock to stop the oil to avoid accidental touch



• The arm can be swung left and right, and the bucket reaches the base of the wall



• Tailless design and flexible compact body allow operation in tight spaces



•The left, right and rear sides of the hood are opened independently



• It can perform three types of composite actions, with silky smooth operation,

LEKING

Main Technical Parameters of Mini Excavators

Engine		Hydraulic system	
Model	Yanmar 3TNV80F	Working device form	Backhoe
Hydraulic pump model	Piston（Rexroth）		
Fuel	Diesel	Machine weight	
power(kw/hp)	15.2/20	Operating weight(kg)	2200
Travel system		Bucket	
Delivery length(mm)	3550	Bucket capacity(m^3)	0.04
Gyration radius(mm)	1645	Dimensions (mm)	
Machine height(mm)	2203	Track width	230
Hydraulic valves		Chassis width	990-1300
Multi-way valve	Load sensing valve	Platform ground clearance	400
		Maximum unloading height	2290
Working range (mm)			
Max. digging height	3200		
Maximum digging radius	3800		
Max. digging depth	2350		
Maximum unloading height	2290		

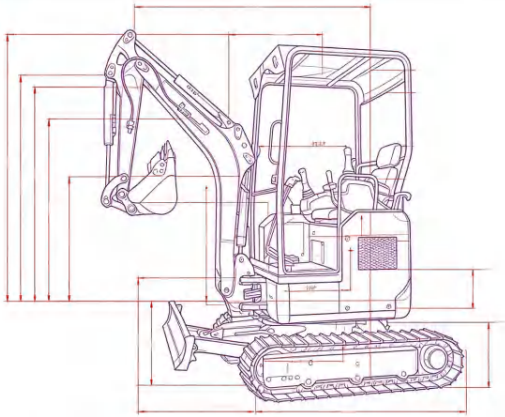

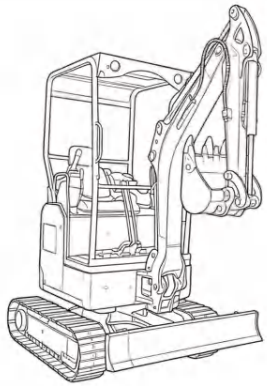







• K30

MINI excavator



• The thickened ceiling provides protection against rain and sun during daily work.



• The one-piece forged boom and arm have strong load-bearing capacity and high excavation force.



• Thickened bulldozer blade, durable and robust.





• Ergonomic joystick, comfortable for long driving sessions.



• The foot pedals are easy to operate, making work effortless and less strenuous.

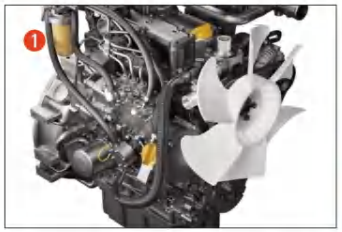

• Equipped with a YanMar 3TNV80 engine, providing strong power.



• Equipped with soundproof cotton and fan, it operates with low noise.



• Steel tracks deliver superior traction and excellent off-road performance.



• The tailless design allows for easy operation in confined spaces.



• The boom can swing to the side, allowing for flexible operation even in narrow spaces.



• A driver's cab and air conditioning can be added.

LEKING

Main Technical Parameters of Mini Excavators

Engine		Hydraulic system	
Engine model	Yanmar 3TNV80F	Drive Type	Hydraulic drive
Displacement(L)	12	Hydraulic pump	Piston pump
Fuel	Diesel	Machine weight	
Rated power(kw)	15.2	Operating weight(kg)	2200
Size(mm)		Bucket	
Transport length	4100	Bucket capacity(m^3)	0.06
Overall width	1500	Dimensions (mm)	
Overall height	2450	Boom length	2000
Oil capacity		Arm length	1360
Fuel tank capacity (L)	20	Length	4100
Hydraulic oil tank capacity (L)	18	Width	1500
Working range (mm)		Height	2450
Overall Dimension	4100×1500×2440	Bucket width	400
Max digging depth	2410	Track width	230
Max digging height	4290	Number of track links	43
Max dumping height	2880	Bucket excavating force (KN)	20
Max.digging radius	4250		
Min swing radius	710		

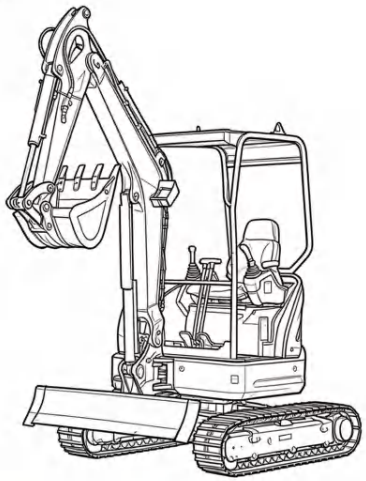

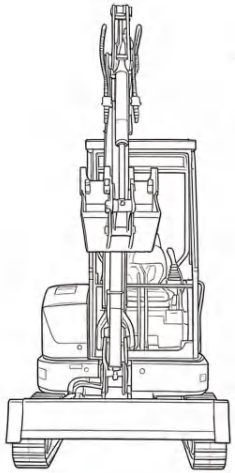









• K35

MINI excavator



• The oil pipe routing has been newly upgraded. All oil hoses are concealed inside the boom, preventing damage and extending service life.



• Thickened side plates, wear liners on bucket wall, multi-layer reinforced bottom plate, rock teeth. Heavy-duty construction.



• Thickened bulldozer blade, durable and robust.





• Thickened steel tube rollover canopy, reliable protection.



• Hydraulic safety lock lever, prevents accidental machine movement.



• Yanmar 3TNV80F Engine, low fuel consumption & high durability.



• Pilot control levers enable smooth and precise control of the excavator.

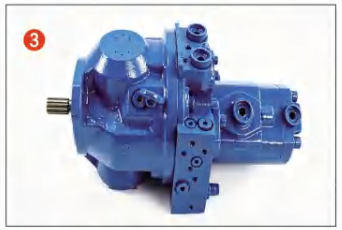

• ZHTE AP2D28 Hydraulic Piston Pump.High pressure, stable flow, low failure rate.



• The tailless design allows for easy operation in confined spaces.



• The boom can swing to the side, allowing for flexible operation even in narrow spaces.



• ZHTE 8-spool control valve, reliable hydraulic distribution valve.

LEKING

Main Technical Parameters of Mini Excavators

Engine		Hydraulic system	
Model	Yanmar 3TNV80F	Hydraulic pump model	Piston pump
Emission Standard	EU Stage V & EPA Tier 4 Final	Max.flow (L/min)	40
Fuel	Diesel	Machine weight	
Rated power(kw/r/min)	14.6kw	Operating weight(kg)	2450
Travel system		Bucket	
Travel speed (km/h)	2.2	Bucket capacity(m^3)	0.06
Max. Traction Force(KN)	16	Dimensions (mm)	
Max. climbing degree (%)	35	Overall length	4100
Oil capacity		Overall width	1500
Fuel tank capacity (L)	20	Overall height	2450
Hydraulic oil tank capacity (L)	18	Boom length	2000
Working range (mm)		Arm length	1560
Max. digging height	4370	Bucket width	400
Max. dumping height	3070	Track width	300
Max. digging depth	2600	Track pitch	101
Max. swing radius	4520	Number of track links	40
Min. swing radius	710		

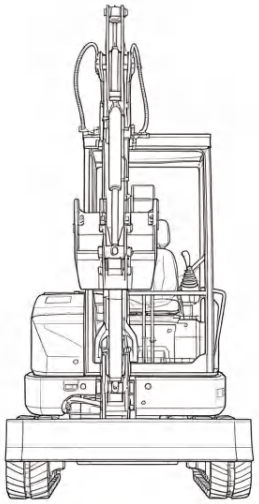

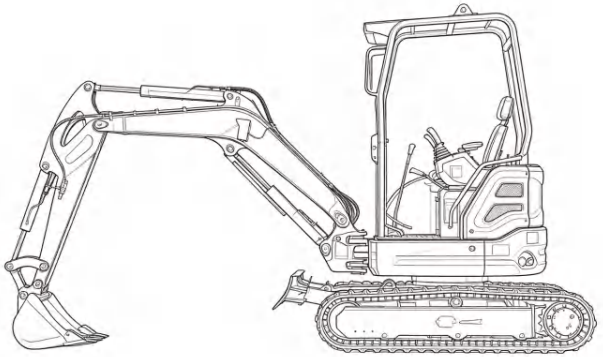







• KV12A

MINI
excavator



• Standard four-leg canopy effectively shields against falling rocks, sun, and rain.

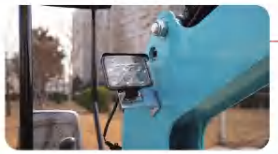

• LED lights turn on instantly with no delay or light decay, providing instant illumination in emergencies.



• Thickened bulldozer blade, durable and robust.





• Ergonomic joystick, comfortable for long driving sessions.



• Engineering rubber tracks, shock absorption and noise reduction,



• Equipped with a Huapuri 192 engine, providing strong power.

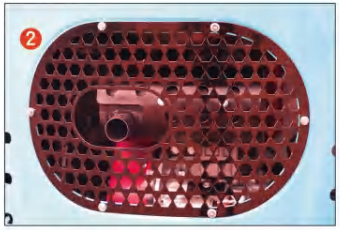

• Built-in cooling fan provides excellent heat dissipation.

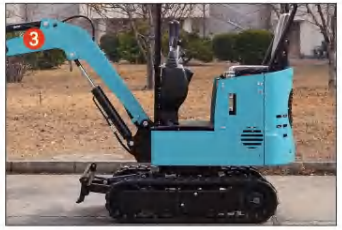

• The three-sided cast iron counterweight makes the machine more stable.



• With a body width of only 93 cm, it can move freely in narrow spaces.



• Integrated forged boom and dipper stick, providing strong digging force, high load-bearing capacity, and more stable operation.



• Foot-operated, saving time and effort.

LEKING

Main Technical Parameters of Mini Excavators

Engine		Hydraulic system	
Model	Huapuri 192	Working device form	Bockhoe
Hydraulic pump model	Single gear pump		
Fuel	Diesel	Machine weight	
Rated power(kw/r/min)	8.2/3600	Operating weight(kg)	900
Track		Bucket	
Number of track links	37	Bucket capacity(m^3)	0.025
Track width(mm)	180	Dimensions (mm)	
Track gauge(mm)	72	Wheel track	895
Oil capacity		Overall length of track	1203
Fuel tank capacity (L)	16	Ground clearance of platform	357
Power(kw)	7.6	Ground clearance of platform tail	800
Working range (mm)		Chassis width	930
Max. digging radius on ground	2850	Crawler width	180
Max. digging depth	1650	Crawler height	313
Max. digging height	2600	Transportation length	2775
Max. unloading height	1800	Overall height	2219
Max. vertical digging depth	1380	Wheel distance	420
Min. swing radius	1300	Ground length	1150
Max. lifting height of dozer blade	110	Delivery length	2170
Max. digging depth of dozer blade	110	Machine height	1880
Platform ground clearance	385		
Machine size	2000*930*2200		

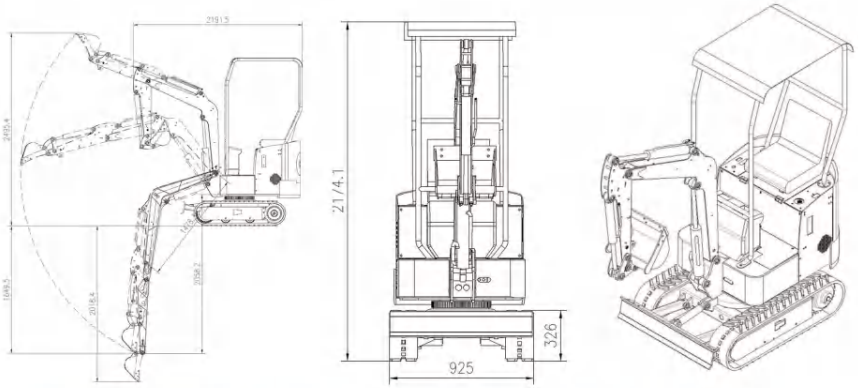







• KV12

MINI excavator



• Top-mounted cylinder: atop the boom, clear of collision-prone zones.





• High-strength steel pipe structure to prevent rollers



• Mechanical front controls: simple, low-cost, reliable, direct feedback, easy maintenance.



• Dozer blade down: extra support, less sway, flatter trench, accurate slope.



• Rubber tracks that reduce noise and vibration



• Powerful Huapuri 192F engine as standard.



• Boom swing,tight-space precision, less repositioning/damage.



• Integrated panel: gauges, e-stop, power switch, key ignition.



• Openable cover: direct access to key components—no teardown.



• Ergonomic suspension seat for fatigue-free extended operation.



• Independent fuel tank, isolated from engine and hydraulic oil compartments

LEKING

Main Technical Parameters of Mini Excavators

Engine		Hydraulic system	
Model	HPR192F / Rato 420 / Kubota D722	Working pressure(Mpa)	16
Hydraulic pump model	Single gear pump	Max.flow (L/min)	18
Fuel	Diesel	Machine weight	
Rated power(kw/r/min)	8.2	Operating weight(kg)	1000
Travel system		Bucket	
Travel speed (kmh)	2.1-4.0	Bucket capacity(m^3)	0.025
Swing speed (r/min)	13	Dimensions (mm)	
Max. climbing degree (%)	30°	Overall length	2312
Oil capacity		Overall width	930
Fuel tank capacity (L)	9	Turntable width	900
Hydraulic oil tank capacity (L)	13	Overall height (to top of cab)	2214
Working range (mm)		Counterweight ground clearance	390
Max. digging height	2657	Track shoe width	180
Max. dumping height	2010	Max. digging reach at ground level	2976
Max. digging depth	1598	Track ground length	1250
Distance between center of rotation and tail length	510	Track length	1393
Max. digging reach	2976	Track gauge	930-1050
Max. digging reach at ground level	2976	Track width	180
Min. swing radius	1478		
Deflection angle left°	57.5		
Deflection angle right°	60		

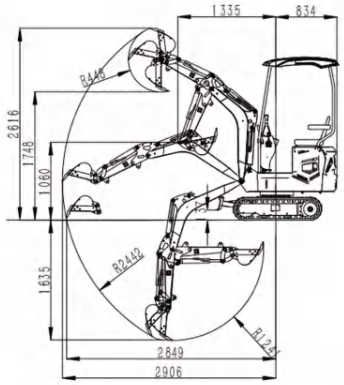

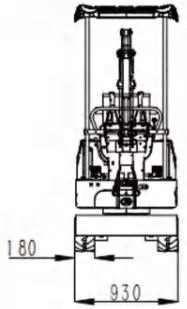

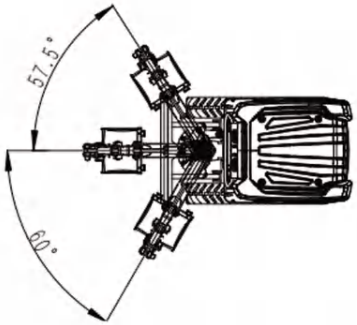







• KV13

MINI excavator





• High-strength steel pipe structure to prevent rollers

• Reinforced thickened buckets



• Hydraulic safety lock to prevent accidental touch

• Rotatable detachable dozer shovel



• Rubber tracks that reduce noise and vibration

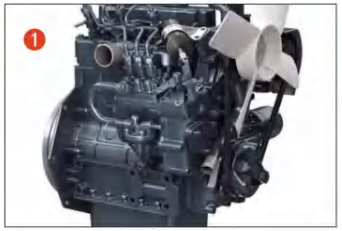

• Compact and powerful Kubota D722 engine



• The big arm can be deflected at a large angle to cover a wider range



• Equipped with a two-speed travel motor, fast and slow



• The double pumps are combined, and the heavy load action is fast



• The tailless design has zero rotation, and there is no collision in wall operation



• Operate precise load-sensitive multi-way valves for on-demand oil supply

LEKING

Main Technical Parameters of Mini Excavators

Engine		Hydraulic system	
Model	Kubota D722	Travel motor model	Two-speed motor
Hydraulic pump model	Double gear pump	Max.flow (L/min)	25
Fuel	Diesel	Machine weight	
Rated power(kw/r/min)	10.2	Operating weight(kg)	1035
Travel system		Bucket	
Travel speed (km/h)	2.1-4.0	Bucket capacity(m³)	0.02
Swing speed (r/min)	13	Dimensions (mm)	
Max. climbing degree (%)	30°	Overall length	3005
Oil capacity		Overall width	750-950
Fuel tank capacity (L)	15	Overall height (to top of boom)	2090
Hydraulic oil tank capacity (L)	15	Overall height (to top of cab)	2160
Working range (mm)		Counterweight ground clearance	380
Max. digging height	3060	Min. ground clearance	140
Max. dumping height	2150	Tail swing radius	510
Max. digging depth	1870	Track ground length	1250
Max. vertical wall digging depth	1550	Track length	1393
Max. digging reach	3350	Track gauge	580-780
Max. digging reach at ground level	2650	Track width	750-950
Min. swing radius	1445	Track shoe width	180
Distance between center of rotation and tail length	510	Turntable width	725
Deflection angle left°	54°		
Deflection angle right	59°		

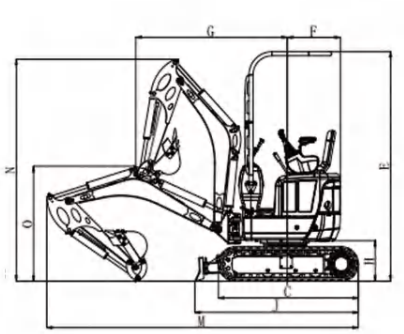

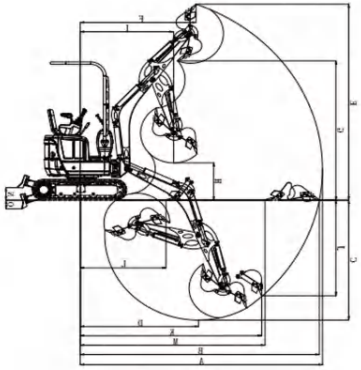







• KV15

MINI excavator



• Thickened steel tube rollover canopy, reliable protection.



• Hidden oil pipe, neat and beautiful appearance.



• Thickened bulldozer blade, durable and robust.





• Ergonomic joystick, comfortable for long driving sessions.



• Lightweight and Precise Handle Control Device



• Lightweight, Efficient, and Low-Noise HPR 192F/Kubota D722 Engine



• Which prevents oil spillage when replacing auxiliary equipment, and has one more hydraulic pipeline

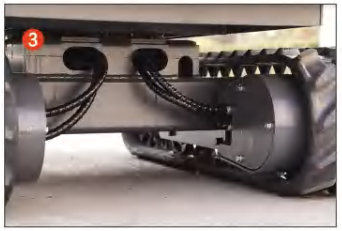

• Low-wear hidden motor, low noise, reduced maintenance costs



• The tailless design allows for easy operation in confined spaces



• The big arm can be swung sideways for greater flexibility during work and can dig into corners



• Hydraulic safety lock cuts hydraulic circuit when engaged, preventing unintended movement

LEKING

Main Technical Parameters of Mini Excavators

Engine		Hydraulic system	
Model	HPR 192F/Kubota D722	Hydraulic pump model	CBT-E306
Working pressure (Mpa)	16	Max.flow (L/min)	6.3
Fuel	Diesel	Machine weight	
Rated power(kw/r/min)	7/10.3	Operating weight(kg)	925
Travel system		Bucket	
Travel speed (km/h)	2	Bucket capacity(m³)	0.025
Swing speed (r/min)	9	Dimensions (mm)	
Max. climbing degree (%)	30	Overall length	2241
Oil capacity		Overall width	980
Fuel tank capacity (L)	9	Overall height (to top of boom)	1885
Hydraulic oil tank capacity (L)	11.8	Overall height (to top of cab)	2242
Working range (mm)		Counterweight ground clearance	415.16
Max. digging height	2682	Min. ground clearance	121.87
Max. dumping height	1838	Tail swing radius	836.2
Max. digging depth	1568	Track ground length	927
Max. vertical wall digging depth	1568	Track length	1247
Max. digging reach	3003	Track gauge	800
Max. digging reach at ground level	2918	Track width	180
Min. swing radius	1405	Track shoe width	180
Distance between center of rotation and tail length	1000	Turntable width	900
Deflection angle left°	-		
Deflection angle right	-		

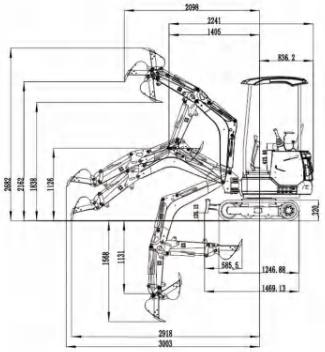

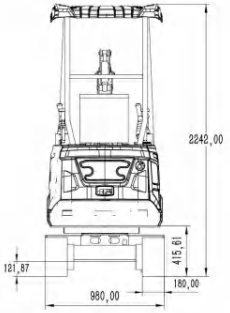









• KV16

MINI excavator



• Thickened roll cage for safe operation.



• Hidden oil pipe,neat and beautiful appearance.



• Thickened bulldozer blade, durable and robust.





• Hydraulcsatylockensuring safe operation.



• The foot pedal can be swung to the side for smoother operation.

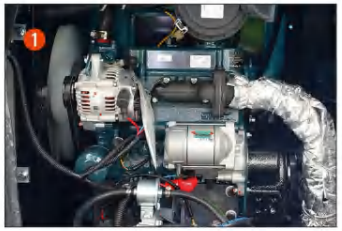

• Equipped with Laidong 380 engine, stable, fuel-efficient and durable



• Recessed travel motor: impact protection, shielded hoses, superior side mobility, fewer failures



• Hydraulic pilot control, light and precise operation, smooth action, reduce long-hour fatigue



• Flip-up hood design: Easy to open, ample access space for quick maintenance and routine service



• The boom can swing to the side, allowing for flexible operation even in narrow spaces



• Load-sensitive multi-way valve, capable of performing multiple combined actions

LEKING

Main Technical Parameters of Mini Excavators

Engine		Hydraulic system	
Engine model	Laidong380/KubotaD722(Optional)	Hydraulic pump model	12+3
Hydraulic pump model	Double gear pump	Max.flow (L/min)	26
Fuel	Diesel	Machine weight	
Working pressure (Mpa)	16	Operating weight(kg)	1100
Motor		Bucket	
Swing motor model	BM2-315	Bucket capacity(m³)	0.025
Travel motor model	WDM-310	Dimensions (mm)	
Oil capacity		Overall length	2260.92
Fuel tank capacity (L)	10	Overall width	1101
Hydraulic oil tank capacity (L)	11.8	Overall height (to top of cab)	2226.37
Working range (mm)		Counterweight ground clearance	390
Max. digging height	2664.12	Tail swing radius	826.96
Max. dumping height	1838	Track width	180
Max. digging depth	1600	Track shoe width	180
Max. vertical wall digging depth	1568	Turntable width	900
Max. digging reach	2931.92		
Max. digging reach at ground level	2879.4		
Min. swing radius	1433.96		
Deflection angle left°	41°		
Deflection angle right	50°		

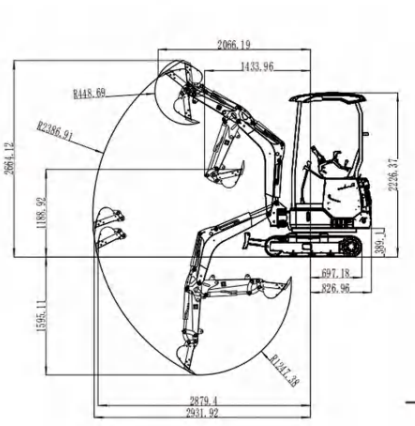

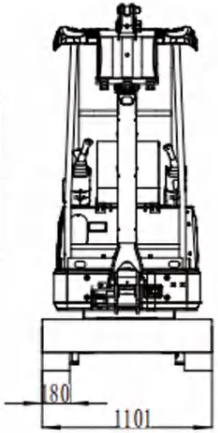

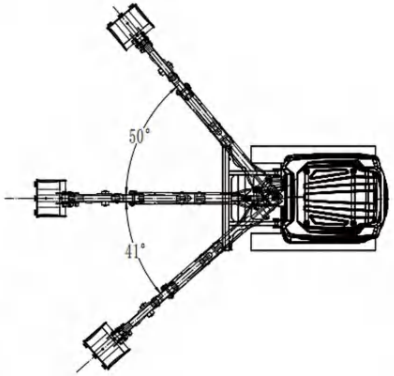







• KV18

MINI excavator

LEKING



• Detachable four-legged canopy.



• Isolate the oil circuit and protect the hydraulic system.



• Thickened bulldozer blade, durable and robust.





• Ergonomic seats that alleviate lower back and hip fatigue during long drives.



• Makes it easy to check if the hydraulic oil level is sufficient.



• Equipped with a Laidong 385 /Kubota D722engine, providing strong power.



• A safety hydraulic lock prevents accidental operation; the lock must be lifted when dismounting.



• Concealed motor; impact-resistant design reduces the risk of underbody scraping.



• The tailless design allows for easy operation in confined spaces.



• The boom can swing to the side, allowing for flexible operation even in narrow spaces.



• The pedal-operated side-swing mechanism enables fluid, compound movements.

Main Technical Parameters of Mini Excavators

Engine		Hydraulic system	
Engine model	Laidong 385/Kubota D722/Kubota D902	Travel motor model	WDM-490
Hydraulic pump model	Double gear pump	Max.flow (L/min)	26
Fuel	Diesel	Machine weight	
Rated power(kw/r/min)	18.3/10.4/11.3/2200r	Operating weight(kg)	1800
Oil capacity		Bucket	
Fuel tank capacity (L)	17	Bucket capacity(m³)	0.025
Hydraulic oil tank capacity (L)	13.5	Dimensions (mm)	
Working range (mm)		Overall length	2424.58
Max. digging height	2861	Overall width	1100-1400
Max. dumping height	2400	Overall height (to top of boom)	2467
Max. digging depth	1940	Counterweight ground clearance	422.4
Max. vertical wall digging depth	2300	Tail swing radius	815
Max. digging reach	3388	Track width	230
Max. digging reach at ground level	3336	Track shoe width	230
Min. swing radius	1569		
Deflection angle left°	43°		
Deflection angle right	50°		

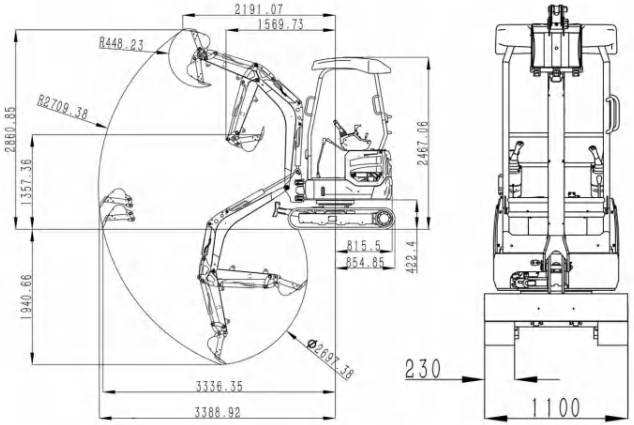

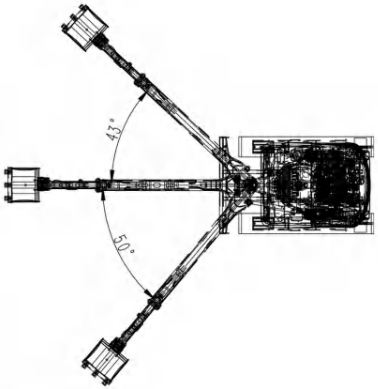







• KV18U

MINI excavator



• Thickened roll cage for safe operation.





• Ergonomic joystick, comfortable for long driving sessions.



• Standard side swing boom for flexible operation in confined spaces.



• Foot-operated, easy and labor-saving work.



• Thickened bulldozer blade, durable and robust.



• Equipped with a KUBOTA D722/LaiDong385 engine, providing strong power.



• Install a heat dissipation mesh to lower the water temperature and reduce high-temperature alarms.



• Optional telescopic chassis and high/low speed selection.



• The tailless design allows for easy operation in confined spaces.



• Engineering rubber tracks, large contact area, strong grip.



• Specialized crushing pipeline, sufficient flow, stable pressure, strong crushing power.

LEKING

Main Technical Parameters of Mini Excavators

Engine		Hydraulic system	
Model	Kubota D722/LaiDong385	System pressure	16
Hydraulic pump model	Gear pump	Max.flow (L/min)	20/26.4
Fuel	Diesel	Machine weight	
Rated output power(km)	10.2/18.1	Operating weight(kg)	1325
Travel system		Bucket	
Travel speed (km/h)	1.8	Bucket capacity(m³)	0.025
Swing speed (r/min)	9.5	Dimensions	
Max. climbing degree (°)	40	Overall length	3249
Oil capacity		Overall width	1120
Fuel tank capacity (L)	10.5	Overall height (to top of boom)	2928
Hydraulic oil tank capacity (L)	16	Overall height (to top of cab)	2314
Working range (mm)		Swing center to cab	1427
Max. digging height	2928	Body width	942
Max. dumping height	2090	Chassis width	1120
Max. digging depth	1991	Track height	330
Max. vertical wall digging depth	1511	Track width	230
Max. horizontal digging radius	3396	Track gauge	72
Front minimum turning radius	1427	Number of track links	43
Exit width (retractable)	1120 (990-1165)	Bucket width	400
Shipping dimensions	3249*1120*2314	horizontal distance from the bucket front	3396
Left swing angle°	40°		
Right swing angle°	50°		

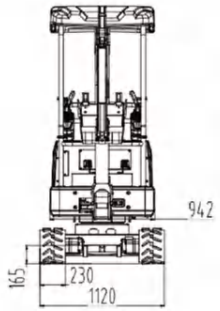

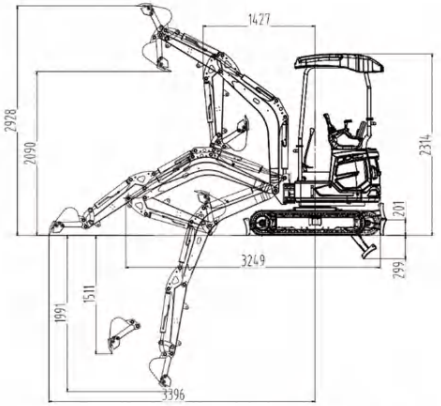

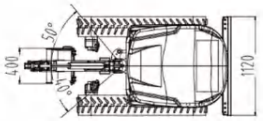







• KV20

MINI
excavator

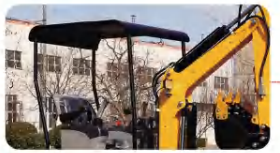

• Thickened roll cage for safe operation.



• Standard LED headlights provide high brightness and clearer visibility.



• Thickened bulldozer blade, durable and robust.





• Ergonomic joystick, comfortable for long driving sessions.



• The foot pedal can be swung to the side for smoother operation.



• Equipped with a Kubota D722 engine, providing strong power.



• Widened and thickened rubber tracks, strong grip, anti-slip and wear-resistant.



• Load-sensitive multi-way valve, capable of performing multiple combined actions.



• The tailless design allows for easy operation in confined spaces.



• External fuel tank, making refueling more convenient.



• Engage the safety lock to directly lock all operating levers, preventing accidental operation and avoiding accidents.

LEKING

Main Technical Parameters of Mini Excavators

Engine		Hydraulic system	
Engine model	Laidong 380	Multi-way valve	Load sensing valve
Hydraulic pump model	Piston pump	Hydraulic flow (L/min)	40
Fuel	Diesel	Machine weight	
Rated power(kw)	10.3	Operating weight(kg)	1580
Track size		Bucket	
Track Length(mm)	1250	Bucket capacity(m^3)	0.03
Track Width(mm)	230	Dimensions (mm)	
Max. climbing degree (%)	40	Machine weight	1580
Oil capacity		Chassis Width	1160
Fuel tank capacity (L)	15	Track Length	1250
Hydraulic oil tank capacity (L)	16	Track Width	230
Working range (mm)		Chassis Ground Clearance	385
Max.Digging Height	2700	Overall Dimension	2200×1100×2200
Max.Dumping Height	1900	Transport Length	2200
Max.Digging Depth	1910	Excavator Height	2200
Max.Digging Radius	3280	Turning Radius	1636
Platform ground clearance	400	Wheel distance	920
Bucket excavating force(KN)	15	Ground length	1500
		Gyration radius	1477

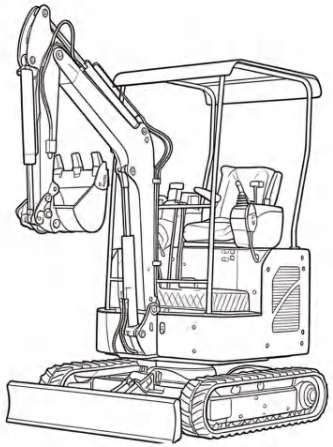

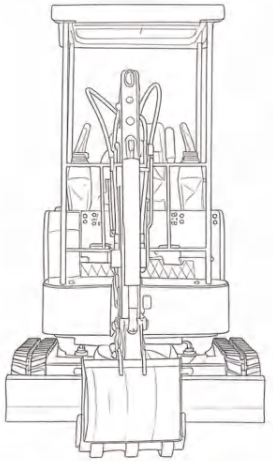

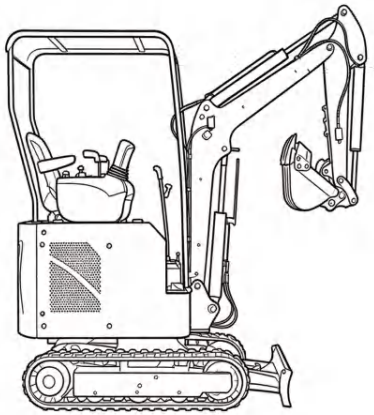







• KV25

MINI
excavator



* Equipped with a high-strength ROPS canopy.

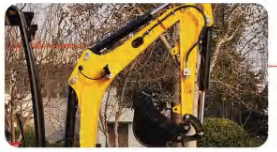

* Top-mounted cylinder, collision-proof and highly reliable.



* Thickened bulldozer blade, durable and robust.





* Electronically controlled hydraulic pilot handle, which can control chassis telescopic and electronic horn



* Upgraded walking piston rod with dust cover; foot-controlled side swing, convenient and labor-saving.



* Powerful, Fuel-Efficient, and Durable Laidong Engine.



* Shock-absorbing seat ensures comfort while working.

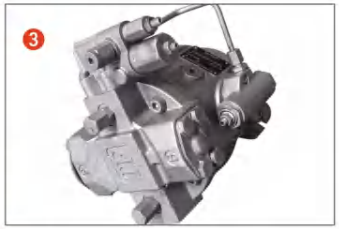

* Taifeng variable piston pump, load-sensing system, supports combined actions, smooth operation.

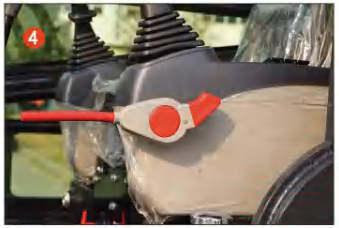

* Hydraulic safety lock for safe operation; large inclination design for easier access.



* Standard big arm side swing function, cast iron side swing head, beautiful and durable.



* Load-sensitive multi-way valve, capable of performing multiple combined actions.

LEKING

Main Technical Parameters of Mini Excavators

Engine		Hydraulic system	
Model	Laidong385/Yanmar 3TNV80F	Hydraulic pump model	Piston pump
Fuel	Diesel	Multi-way valve	load sensing
Rated power(kw/r/min)	18.4kw/14.6kw	Machine weight	
Oil capacity		Operating weight(kg)	2100
Fuel tank capacity (L)	16	Bucket	
Hydraulic oil tank capacity (L)	16	Bucket capacity(m^3)	0.04
Working range (mm)		Dimensions (mm)	
Max. digging height	3250	Overall length	2880
Max. dumping height	2830	Overall width	1100-1400
Max. digging depth	2200	Full vehicle height	2500
Max. digging radius	3850	Platform ground clearance	446.6
Radius of gyration	1680	Counterweight ground clearance	430
		Track ground length	1250
		Track gauge	920
		Track width	230

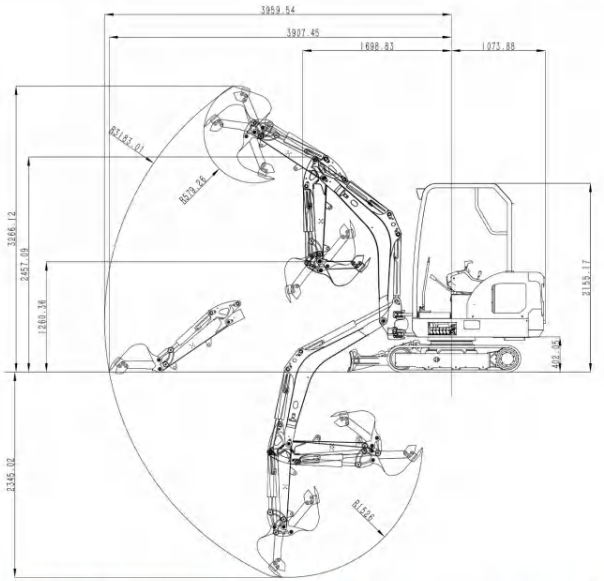







• KM500-QL

LAWN
mower

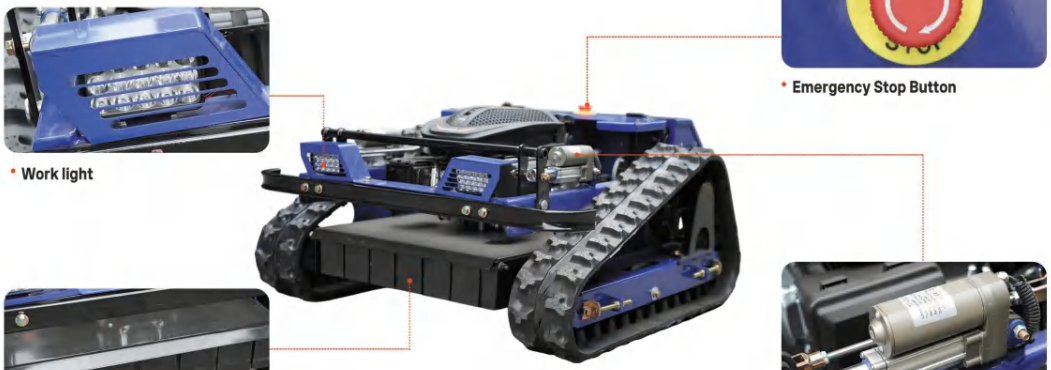

• Work light

• Emergency Stop Button

• Grass baffle

• Hydraulic lifting



Power generation system

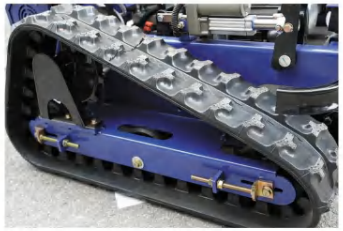

Engineering Crawler



RATO Engine



Manganese steel blade



Snow Plow



Sprayer

LEKING

Main Technical Parameters of Lawn Mower

Cutting Width	500mm
Cutting Height	1cm-20cm (electric adjustment)
Power Source	Hybrid fuel-electric (manual throttle)
Power/Fuel Type	7.5 horsepower /gasoline-powered
Engine Brand	Runtong/Loncin 224
Self-generating System	Built-in generator 2200w
Drive Power	800w2 integrated gearbox
Drive Wheels	32# engineering rubber track
Built-in Battery	2 pieces of Chaowei 12.5A 24V batteries
Starting Method	Manual start/electric start (optional)
Climbing Capacity	50 degrees
Remote Control System	500m remote control distance, high & low speed
Travel Speed	0 - 4km/h
Working Efficiency	≤2200m²/h
Fuel Tank Capacity	1.4L
Oil Tank Capacity	0.6L
Maximum Fuel Consumption	2L/h
Overall Dimensions	940*940*550mm
Net Weight	153kg

PRODUCT DISPLAY







• KM550-QL

LAWN mower

LEKING





• Power generation system



• Work light



• Hydraulic lifting



• Grass baffle

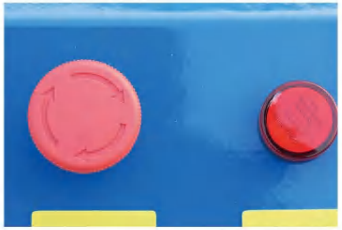

Emergency Stop Button

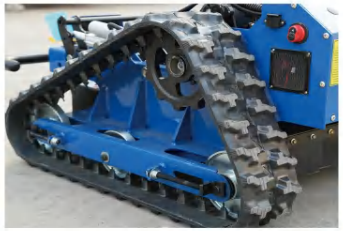

Engineering Crawler



LONCIN Engine



Manganese steel blade



Snow Plow



Sprayer

Main Technical Parameters of Lawn Mower

Cutting Width	550mm
Cutting Height	1cm-20cm (electric adjustment)
Power Source	Hybrid fuel-electric (manual throttle)
Power/Fuel Type	9.5 horsepower /gasoline-powered
Engine Brand	Runtong/Loncin 196
Self-generating System	Built-in generator 2200w
Drive Power	800w2 integrated gearbox
Drive Wheels	32# engineering rubber track
Built-in Battery	2 pieces of Chaowei 12.5A 24V batteries
Starting Method	Manual start/electric start (optional)
Climbing Capacity	50 degrees
Remote Control System	500m remote control distance, high & low speed
Travel Speed	0 - 4km/h
Working Efficiency	≤2200m²/h
Fuel Tank Capacity	1.4L
Oil Tank Capacity	0.6L
Maximum Fuel Consumption	2L/h
Overall Dimensions	940*940*550mm
Net Weight	146kg

PRODUCT DISPLAY







• KM800-QL

LAWN mower

LEKING



• Fuel tank





• Emergency Stop Button



• Grass baffle



• Hydraulic lifting

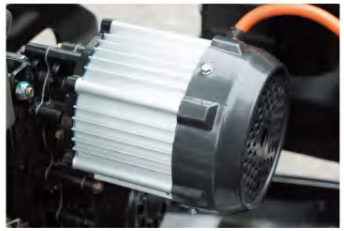

Power generation system



Engineering Crawler



RATO Engine

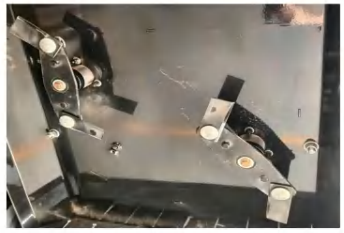

Double cutting blades

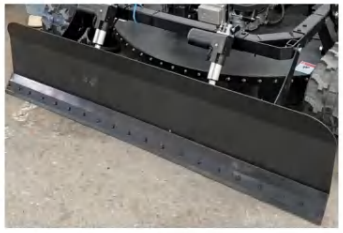

Snow Plow



Sprayer

Main Technical Parameters of Lawn Mower

Cutting Width	800mm
Cutting Height	2cm-15cm (electric adjustment)
Power Source	Hybrid fuel-electric (manual throttle)
Power/Fuel Type	16 or 23 horsepower /gasoline-powered
Engine Brand	Loncin
Self-generating System	Built-in generator 2200w
Drive Power	800w2 integrated gearbox
Drive Wheels	32# engineering rubber track
Built-in Battery	2 pieces of Chaowei 40A 24V batteries
Starting Method	Manual start/electric start (optional)
Climbing Capacity	45 degrees
Remote Control System	200m remote control distance, high & low speed
Travel Speed	0 - 5km/h
Working Efficiency	3800m²/h
Fuel Tank Capacity	7.1L
Oil Tank Capacity	1.2L
Maximum Fuel Consumption	1.2L/h
Overall Dimensions	1150*120*6000mm
Net Weight	255kg

PRODUCT DISPLAY







• KM500-LB

LAWN
mower

LEKING



• Throttle cable





• Emergency Stop Button



• Fuel tank



• Grass baffle



Power generation system



Lawn Tires



RATO Engine



Manganese steel blade



Cooling Fan

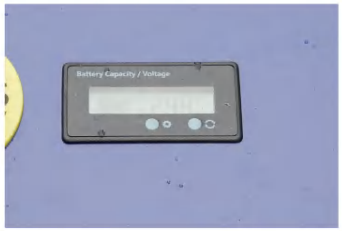

Display Screen

Main Technical Parameters of Lawn Mower

Cutting Width	500mm
Cutting Height	7cm
Power Source	Hybrid fuel-electric (manual throttle)
Fuel Type	Gasoline-powered
Engine Brand	Kohler/Rato/Loncin
Voltage Power	24V70AH
Controller	Integrated Circuit Controller
Drive Wheels	Grass tire
Standard Power	RV225
Starting Method	Remote control start
Climbing Capacity	35 degrees
Remote Control System	300m remote control distance, high & low speed
Travel Speed	5km/h
Battery Life	4-5 hours
Fuel Tank Capacity	1.2L
Oil Tank Capacity	0.6L
Maximum Fuel Consumption	1.2L/h
Overall Dimensions	980*880*460mm
Net Weight	105kg

PRODUCT DISPLAY







• KM600-LB

LAWN
mower

LEKING



• Lifting rod



• Emergency Stop Button





• Power generation system



• Grassland Outlet



Throttle Cable



Engineering Crawler



RATO Engine



Manganese steel blade



Display Screen



Remote Control

Main Technical Parameters of Lawn Mower

Cutting Width	600mm
Cutting Height	2cm-15cm (electric adjustment)
Power Source	Hybrid fuel-electric (manual throttle)
Power	9.5 horsepower
Engine Brand	Kohler/Rato/Loncin
Self-generating System	Built-in generator 2200w
Drive Power	800w2 integrated gearbox
Drive Wheels	Grass tire
Voltage Power	24V40AH
Start mode	Remote start,remote shutdown
Climbing Capacity	30 degrees
Remote Control System	300m remote control distance, high & low speed
Travel Speed	0 - 5km/h
Working Efficiency	3000m²/h
Fuel Tank Capacity	1.2L
Oil Tank Capacity	0.6L
Maximum Fuel Consumption	1.2L/h
Overall Dimensions	1200*800*540mm
Net Weight	120kg

PRODUCT DISPLAY







• KM500-HS

LAWN mower

LEKING



Main Technical Parameters of Lawn Mower

Cutting Width	500mm
Cutting Height	20mm-150mm
Engine	Kohler/Rato/Loncin
Mowing efficiency	1500m²/h
Start mode	Remote control lifting
Walking speed	4km/h
Product Weight	150kg
Overall machine size	930*900*640mm
Packaging Dimensions	990*990*810mm
Packaging weight	186KG
Fuel tank capacity	1.2L
Fuel consumption	1.2L/h
Oil capacity	0.6L
Voltage and charge	24V24A
Climbing angle	45°
Cutting Lift Adjustment	Remote control for lifting and lowering
Generation method	self-generated
Power	9HP
Remote control distance	200m



Power generation system



Engineering Crawler



Engine



Manganese steel blade



Snow Plow



Remote control device

PRODUCT DISPLAY







• KM800-HS

LAWN
mower

LEKING



• Work light





• Emergency Stop Button



• Grass baffle



• Hydraulic lifting

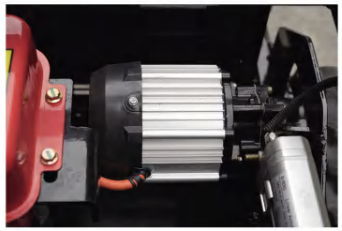

Power generation system

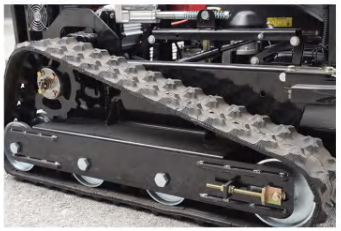

Engineering Crawler



Engine

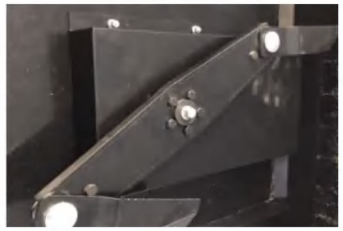

Manganese steel blade



Snow Plow



Remote control device

Main Technical Parameters of Lawn Mower

Cutting Width	800mm
Cutting Height	20mm-150mm
Engine	Loncin
Mowing efficiency	3800m²/h
Start mode	Remote control lifting
Walking speed	5km/h
Product Weight	255kg
Overall machine size	1100*1270*650mm
Packaging Dimensions	1150*1320*820mm
Climbing angle	45°
Generation method	Self-generation
Voltage and charge	24V40AH
Fuel tank capacity	7.1L
Oil capacity	1.2L
Packaging weight	310KG
Remote control distance	200m
Power	16HP-23HP
Motors	Brushless motor
Cutting Lift Adjustment	Remote control for lifting and lowering

PRODUCT DISPLAY







• KM1000-HS

LAWN
mower

LEKING



• Emergency Stop Button





• Grass baffle



• Hydraulic lifting

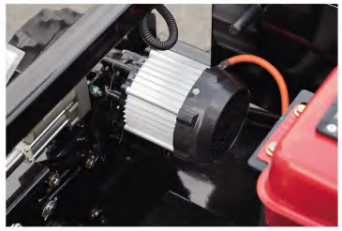

Power generation system



Engineering Crawler



Engine

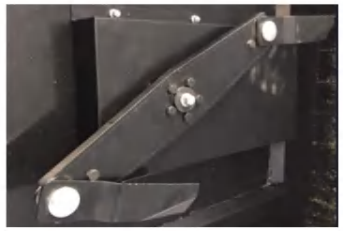

Manganese steel blade



Snow Plow



Remote control device

Main Technical Parameters of Lawn Mower

Cutting Width	1000mm
Cutting Height	20mm-150mm
Engine	Loncin
Mowing efficiency	4000㎡/h
Start mode	Remote control lifting
Walking speed	5km/h
Product Weight	300kg
Dimensions	1430*1250*660mm
Package size	1480*1300*830mm
Climbing angle	45°
Power	23 HP
Packaging weight	360KG
Voltage and charge	24V40AH
Fuel tank capacity	7.1L
Engine oil capacity	1.2L
Power generation mode	Self-generation
Remote control range	200m
Cutting Lift Adjustment	Remote control for lifting and lowering
Throttle mode	Remote throttle control

PRODUCT DISPLAY







• KM800-HB

LAWN
mower

LEKING

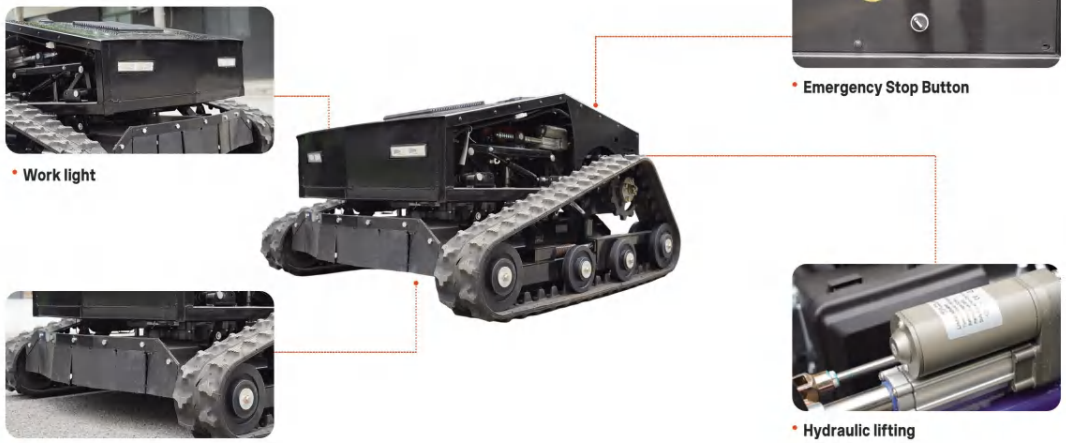

Main Technical Parameters of Lawn Mower

Cutting Width	800mm
Cutting Height	20mm-150mm
Engine	Loncin
Mowing efficiency	4000㎡/h
Start mode	Remote control lifting
Walking speed	5km/h
Product Weight	255kg
Overall machine size	1180*1150*670mm
Packaging Dimensions	1230*1200*840mm
Climbing angle	45°
Power	16 or 23 hp
Packaging weight	310KG
Fuel tank capacity	7.1L
Oil capacity	1.2L
supporting heavy wheels	Double-row double wheels
Voltage and charge	24V40AH
Power generation method	self generation
Remote control distance	200m
Cutting Lift Adjustment	Remote control for lifting and lowering

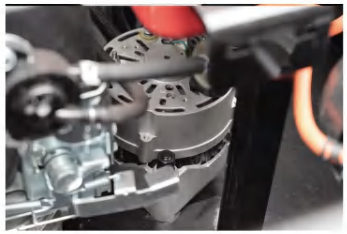

Power generation system

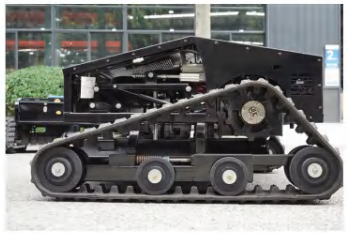

Engineering Crawler



Engine

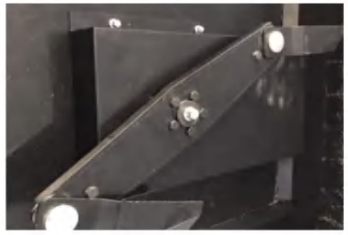

Manganese steel blade

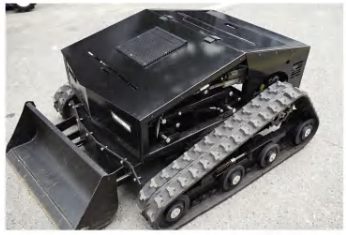

Snow Plow



Remote control device

PRODUCT DISPLAY







• KM800-R

LAWN mower



• Work light





• Emergency Stop Button



• Hydraulic lifting



• Grass baffle



Power generation system



Engineering Crawler

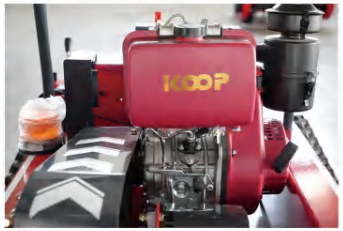

KOOP Engine



Manganese steel blade



Machine Dimensions: 156*98*82cm



Storage Rack

Main Technical Parameters of Lawn Mower

Cutting Width	800mm
Cutting Height	2cm-20cm (electric adjustment)
Power Source	Hybrid fuel-electric (manual throttle)
Packaging Dimension	163*104*103cm
Engine Brand	KooP192
Drive Motor	550W brushless motor
Cutter Rotation Control	Clutch
Blade Specifications	6.5mm custom manganese steel serrated blades
Starting Method	Electric start
Travel Functions	High/Low speed, fixed speed, tank turn
Battery Specifications	24V 20Ah
Remote Control Range	400m
Weight	400kg
Track Specifications	High-wear rubber tracks
Control Method	Remote control
Generator Power	1260W
Shutdown	One-touch shutdown
Travel Motors	Dual 650W brushless motors
Cutter Set Configuration	16 groups of 32 blades

PRODUCT DISPLAY







• KM1000-R

LAWN mower

LEKING



• Working Lever





• Emergency Stop Button



• Grass baffle



• Hydraulic lifting



Clutch



Engineering Crawler



KOOP Engine



Manganese steel blade



Machine Size: 156*117*98cm



Storage Rack

Main Technical Parameters of Lawn Mower

Cutting Width	1000mm
Cutting Height	Adjustable 2-20cm
Drive Motor	650W brushless motor
Cutter Rotation Control	Clutch
Blade Specifications	6.5mm custom manganese steel serrated blade
Starting Method	Electric start
Travel Functions	High/Low speed, fixed speed, tank turn
Battery Specifications	24V 20Ah
Power System	Hybrid
Remote Control Range	1000m
Track Specifications	High-wear rubber tracks
Control Method	Remote control
Generator Power	1260W
Shutdown	One-touch shutdown
Cutter Set Configuration	20 sets, 40 blades total
Engine Brand	Koop Engine
Weight	385kg
Packaging Dimensions	1630*1220*1030mm

PRODUCT DISPLAY







• KM1200-R

LAWN mower

LEKING





Clutch



Engineering Crawler



KOOP Engine



Manganese steel blade



Adjustment lever



Storage Rack

Main Technical Parameters of Lawn Mower

Cutting Width	1200mm
Cutting Height	2-20cm adjustable
Drive Motor	650W brushless motor
Blade Rotation Control	Clutch control
Blade Specifications	6.5mm custom manganese steel serrated blades
Starting Method	Electric start
Moving Functions	High and low speed, constant speed, tank turn
Battery Specifications	24V20Ah
Power System	Hybrid power
Remote Control Distance	1000m
Track Specifications	High wear-resistant rubber tracks
Control Method	Remote control
Generator Power	1260W
Stop Method	One-button stop
Cutter Set Configuration	24 sets of 48 blades
Engine	KOOP Engine
Machine Dimensions	1560*1380*980mm
Packaging Dimensions	1630*1430*1030mm
Net Weight	360kg

PRODUCT DISPLAY







• KM800-JR

LAWN
mower



• Warning light

• Emergency Stop Button

• Straw Screen

• Hydraulic lifting

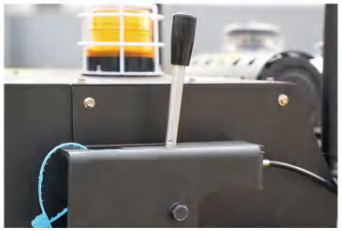

Adjustment lever



Engineering Crawler



Kaiyuelin / Changchai / Koop Engine



Manganese steel blade



Snow Plow



Storage Rack

LEKING

Main Technical Parameters of Lawn Mower

Cutting Width	800mm
Cutting Height	1cm-28cm
Power Source	Hybrid gasoline
Engine Power	13 horsepower
Fuel Type	diesel or gasoline optional
Engine Brand	Kaiyuelin / Changchai / Koop
Self-Generating System	Built-in 2500W generator
Drive Power	Dual 1000W motors with split gearboxes
Drive Tracks	32-size engineering rubber crawler tracks (tank-style)
Built-in Batteries	2 pieces of 24V 20.5Ah Chaowei battery
Starting Mode	Standard electric start
Max Climbing Gradient	50 degrees
Remote Control System	500m remote range, high/low speed shift
Travel Speed	0-6 km/h
Working Efficiency	≤4800m²/h
Fuel Tank Capacity	5.5L
Engine Oil Capacity	1.6L
Fuel Consumption	2L/h
Net Weight	350kg

PRODUCT DISPLAY







• KM1000-JR

LAWN
mower

LEKING

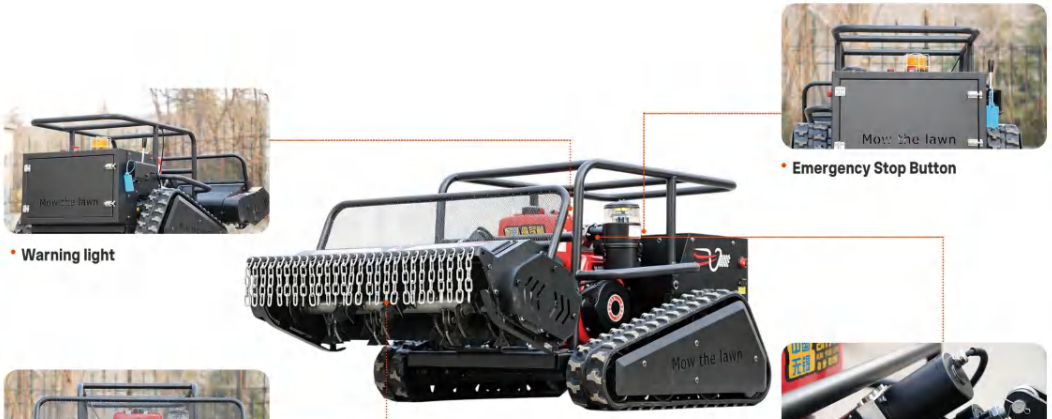

• Warning light

• Emergency Stop Button

• Straw Screen

• Hydraulic lifting



Control System



Engineering Crawler



Kaiyuelin / Changchai / Koop Engine



Manganese steel blade



Snow Plow



Storage Rack

Main Technical Parameters of Lawn Mower

Cutting Width	1000mm
Cutting Height	1cm-20cm
Power Source	Hybrid gasoline
Engine Power	22/25/27 horsepower
Fuel Type	diesel or gasoline optional
Engine Brand	Loncin 608 Four-Stroke
Self-Generating System	Built-in 2500W generator
Drive Power	Dual 1000W Split-Type Gearbox
Drive Tracks	41 Construction Rubber Track
Built-in Batteries	24V Battery System: 2 × Chaowei 20.5Ah
Starting Mode	Standard electric start
Max Climbing Gradient	60 degrees
Remote Control System	500m remote range, high/low speed shift
Travel Speed	0-6 km/h
Working Efficiency	≤4800m²/h
Fuel Tank Capacity	12L
Engine Oil Capacity	1.2/1.6L
Fuel Consumption	5.2L/h
Net Weight	340kg

PRODUCT DISPLAY







• KM800-TK

LAWN
mower



• Protect the engine



• Emergency Stop Button





• Grass baffle



• Hydraulic lifting



Smart switch

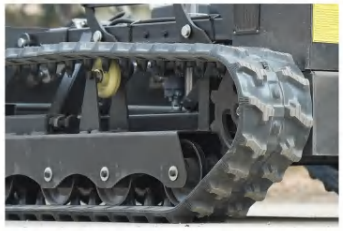

Thickened track



Quality gasoline engine



Manganese steel blade



Chain curtain



Traction winch

LEKING

Main Technical Parameters of Lawn Mower

Cutting Width	800mm
Cutting Height	1cm-20cm (electric adjustment)
Power Source	Hybrid fuel-electric (manual throttle)
Power/Fuel Type	16 horsepower /gasoline-powered
Engine Brand	Loncin 452-608 four-stroke
Self-generating System	Built-in generator 2500w
Drive Power	1000w* 2 split transmission
Drive Wheels	41 Widening Engineering Rubber Track
Built-in Battery	2 pieces of Chaowei 20.5A 24V batteries
Starting Method	Standard distribution starter 20.5A starter battery * 1 piece
Climbing Capacity	60 degrees
Remote Control System	500m remote control distance, high & low speed
Travel Speed	0 - 6km/h
Working Efficiency	≤4800m²/h
Fuel Tank Capacity	9L
Oil Tank Capacity	1.6L
Maximum Fuel Consumption	4L/5.2L /h
Overall Dimensions	145000*1330*700mm
Net Weight	300kg

PRODUCT DISPLAY







• KM1000-TK

LAWN mower



• Protect the engine



• Emergency Stop Button





• Grass baffle



• Hydraulic lifting



Smart switch

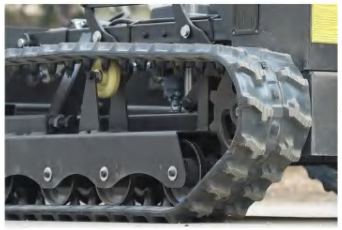

Thickened track



Quality gasoline engine



Manganese steel blade



Chain curtain



Traction winch

LEKING

Main Technical Parameters of Lawn Mower

Cutting Width	1000mm
Cutting Height	1cm-20cm (electric adjustment)
Power Source	Hybrid fuel-electric (manual throttle)
Power/Fuel Type	22/25/27 horsepower /gasoline-powered
Engine Brand	Loncin 608 four-stroke
Self-generating System	Built-in generator 2500w
Drive Power	1000w* 2 split transmission
Drive Wheels	41 Widening Engineering Rubber Track
Built-in Battery	2 pieces of Chaowei 20.5A 24V batteries
Starting Method	Standard distribution starter 20.5A starter battery * 1 piece
Climbing Capacity	60 degrees
Remote Control System	500m remote control distance, high & low speed
Travel Speed	0 - 6km/h
Working Efficiency	≤6000m²/h
Fuel Tank Capacity	12L
Oil Tank Capacity	1.6L/2.4L
Maximum Fuel Consumption	5.2L/6.8L /h
Overall Dimensions	1550*1530*700mm
Net Weight	340kg

PRODUCT DISPLAY







• KM1200-TK

LAWN
mower

LEKING



• LED headlight



• Emergency Stop Button





• Grass baffle



• Hydraulic lifting



Smart switch

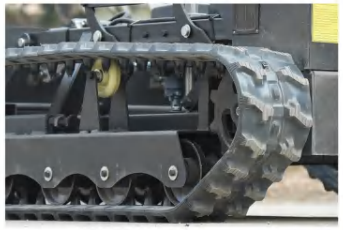

Thickened track



Quality gasoline engine



Manganese steel blade



Chain curtain



Traction winch

Main Technical Parameters of Lawn Mower

Cutting Width	1200mm
Cutting Height	1cm-20cm (electric adjustment)
Power Source	Hybrid fuel-electric (manual throttle)Dual power generation system
Power/Fuel Type	22/25/27 horsepower /gasoline-powered
Engine Brand	Loncin 608 four-stroke
Self-generating System	Built-in generator 2500w
Drive Power	1000w* 2 split transmission
Drive Wheels	41 Widening Engineering Rubber Track
Built-in Battery	2 pieces of Chaowei 20.5A 24V batteries
Starting Method	Standard distribution starter 20.5A starter battery * 1 piece
Climbing Capacity	60 degrees
Remote Control System	500m remote control distance, high & low speed
Travel Speed	0 - 6km/h
Working Efficiency	≤7200m²/h
Fuel Tank Capacity	12L
Oil Tank Capacity	1.6L/2.4L
Maximum Fuel Consumption	5.2L/6.8L /h
Overall Dimensions	1650*1730*700mm
Net Weight	370kg

PRODUCT DISPLAY







• KL-T

LAWN mower



• Powerful Headlights

• Ergonomic Chair

• High Wear-Resistant Anti-Slip Tire

• Gear Shift Lever



Seat with Safety Contact Breaker



Reinforced Steel Deck



Soft-Touch Steering Wheel



320 Liter Collector



Compact Design



Pedal-Powered Walking

LEKING

Main Technical Parameters of Lawn Mower

Cutting Width	34inch/36inch/40inch/42inch
Cutting Height	30-90mm
Engine	ZONSEN
Displacement	440/586/679cc
Oil Capacity	9L
Number of Blades	2
Minimum Uncut Radius	1000mm
Reverse Mowing	Yes
Cutting Method	Collecting
Ground Speed	FWD 0-7KPH/REV 0-4KPH
Steering Wheel	Premium With Soft Grip
Anti-scalp Wheels	2
Tyres	15x6.00-6 (F)-18x8.5-8 (R)
Machine Dimension	2330 mm*1080*1100
Package Dimensions	1700mm*1160mm*840mm
Weight	206/208/210/212kg
Packing Weight	20kg
Container Load 4OHQ	42pcs
Container Load 20GP	12pcs

PRODUCT DISPLAY







• KWF-110

REMOTE
controlled sprayer



• Brass nozzle

• Safety valve

• Track

• Bumper



Equipped with a Loncin engine, it delivers powerful performance and stable output.



Equipped with a safety valve for safer operation.



Large-capacity chemical tank allows for extended operation on a single fill.

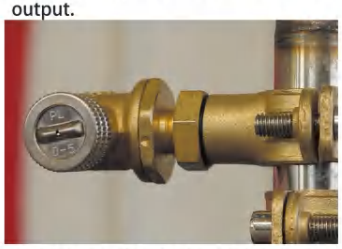

Multiple nozzles discharge simultaneously, providing a wide spray swath and fine atomization.



Low ground pressure; does not damage the soil or crop root systems.

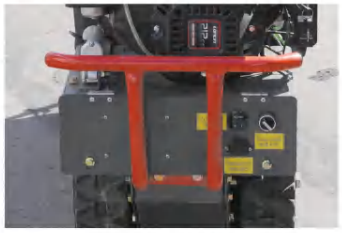

The bumper protects valuable components—such as the engine, fuel tank, and valve assembly—from direct impact damage.

Main Technical Parameters of Remote Controlled Sprayer

Engine	Loncin 170
Number of nozzles	2 (customizable)
Medicine cabinet capacity	100L
Battery life	25 minutes with full water
Remote control distance	>100m
Size	1500x450x1000(mm)
Walking speed	80m/min
Spray width	7m
Overall quality	150kg
Working Principle	Atomization spraying

PRODUCT DISPLAY









• KWF-120

REMOTE
controlled sprayer

LEKING



• Number of Customizable Nozzles





• Large Capacity Medicine Box



• Axial Fan



• Support Roller

Main Technical Parameters of Remote Controlled Sprayer

Engine	LONCIN 170
Pump	Three-cylinder plunger pump Type 26
Track Width	10cm
Chassis Width	52cm
Nozzle Quantity	6 pcs (Customizable)
Travel Speed	80 m/min
Tank Capacity	120kg
Spraying Width	12m
Spraying Height	5.5m
Whole-machine Weight	190 kg
Remote Control Distance	> 200 m
Air Duct Diameter	45 cm
Water Output	7.5L per minute

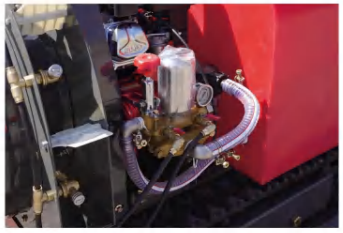

Three-Cylinder Plunger Pump

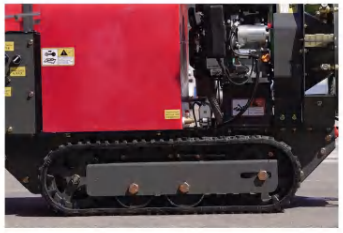

Engineering Rubber Track



LONCIN Engine



Narrow Body



Dimensions: 1500*620*850mm

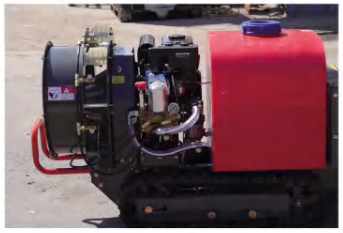

The Engine Drives the Generator for Infinite Endurance.

PRODUCT DISPLAY









• KWF-200

REMOTE
controlled sprayer



• Large-capacity tank for holding pesticide liquid





• High—pressure diaphragm pump assembly delivers stable high pressure; pressure regulating valve allows adjustment of spraying pressure.



• Large-fan Air-Blast Nozzle, Powerful Air Blast



• flexible maneuvering in narrow spaces



Fitted with Changfa 192 diesel engine



Built-in remote receiver and controller to receive signals from the remote controller for whole-machine operation.



For handling and hoisting protection, prevents impact damage to the rear electrical control box.



Stores pesticide liquid, serving as the chemical tank for orchard spraying operations.



Built-in diesel engine supplies full power for water pump, fan and track travel.



Dedicated wireless remote controller supports long□distance full□machine operation

Main Technical Parameters of controlled sprayer

Size	1650*850*960mm
spray pump	Model-30 Triplex Plunger Pump
Track Width	12cm
Chassis Width	70cm
Nozzle Quantity	12 pcs (Customizable)
Travel Speed	80m/min
Tank Capacity	200L
Spray Swath & Spray Height	14m / 6m
Weight	280KG
Remote Control Distance	>200m
Gasoline Engine	Loncin 190/9.2kW / 12.5HP
Diesel Engine	Changfa/Yangma
Output Flow	19.5L/min
Duct diameter	50cm

PRODUCT DISPLAY









• KWF-400

REMOTE
controlled sprayer

LEKING



• Spray nozzle





• Sprayer tank filling cap



• Rubber track



• Stainless steel liquid tank



Nozzle wind deflector



Loncin 190



Air-assisted axial fan

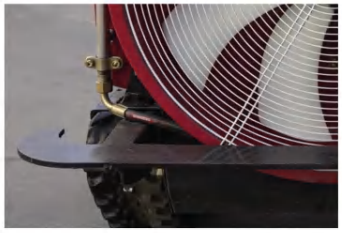

Front bumper guard



Electric control operation panel

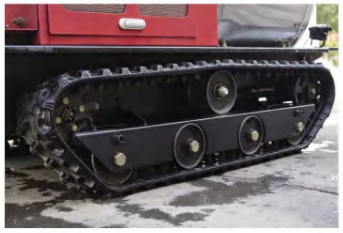

Engine access cover with radiator mesh

Main Technical Parameters of Remote Controlled Sprayer

Dimensions	1800*940*1200mm
Water pump	Three-cylinder plunger pump(,Model 30)
Rubber track width	180mm
Chassis width	960mm
Nozzle quantity	10 (customizable)
Travel speed	75m/min
Tank capacity	400 kg
Spray width	12 m
Spray Height	5m
Overall weight	368kg
Remote-control distance	>200m
Gasoline engine	Loncin 190
Power	9.2kW/12.5HP
Diesel engine	Yanmar 195
Power	9.5kW/12.9HP
Air duct diameter	600mm
Water output	10L/min
Endurance	40min

PRODUCT DISPLAY







• Mini Dumper







BRAND ENGINE



HYDRAULIC TRANSMISSION



OPERATING TABLE



HYDRAULIC SELF-LOADING BUCKEI



SEPERATE HYDRAULICCIRCUIT



FOLDABLE PLATFORM



RUBBER TRACK FORSOLID



HOPPER













• Mini crusher

LEKING

Main Technical Parameters of Mini crusher

KC03		KC20	
Engine model	Koop/Rato	Engine model	Cummins
Oilcomsumpion	1.5L	Max.Feeding Size (mm)	500*300
Max.Feeding Size (mm)	400*250	Capacity(t/h)	20-60
Stock Bin Volume (m^3)	1.0	Output size(mm)	0-70
Outlet adjustment range (mm)	10—50	Maximum feed size(mm)	300
Capacity(t/h)	2-4	Feeding height(mm)	2188
Deiving Mode	Hydraulic motor	Weight (kg)	3500
Track Chassis	(Rubber)B180X1100	Adjustment	Removable shims
Weight (kg)	1350	Transmission	Crusher hydraulic driven
Working size (LxWxH)	2800×760×1450mm	Fuel capacity(L)	45
Transpor tation size (LxWxH)	1800×760×1850mm	Size(mm)	4500*1680*2180
KC10			
Engine model	Laidong 380		
Max.Feeding Size (mm)	400*250		
Stock Bin Volume (m^3)	1.5		
Outlet adjustment range (mm)	10-50		
Capacity(t/h)	8-10		
Deiving Mode	Hydraulic motor		
Track Chassis	230x72x43		
Weight (kg)	1500		
Working size (LxWxH)	3000x1050x1500mm		
Stacking height (mm)	1000		



• Hydraulic motors deliver high torque at low speeds.





• Control levers with intuitive and easy operation.

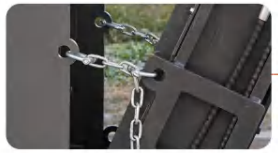

• The chain automatically adapts to angles and clearances through free movement of chain links.



• Equipped with a Laidong 380 engine, providing strong power.



• Enlarge the feed inlet.

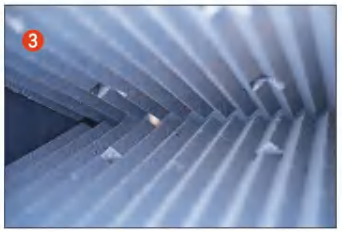

• Adopt V-shaped crushing plates to reduce material slipping and deliver stronger biting force.



• Hidden motor reduces collision risks and extends service life.



• Hydraulic Product Conveyor.



• Rubber Tracked Undercarriage With Radio Remote Control.

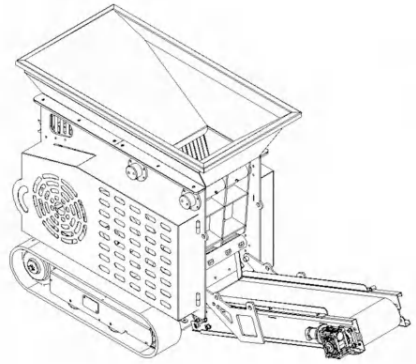

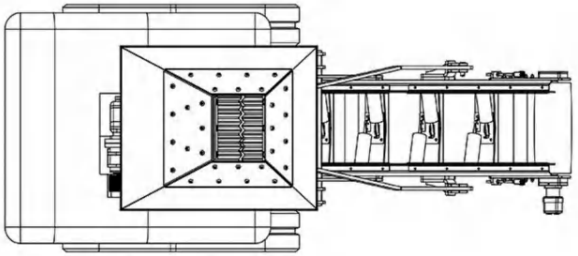







• KW360

SKID steer loader

LEKING

Main Technical Parameters of Skid Steer Loader

Engine		Load Capacity(kg)	
Engine model	Koop/Rato/Briggs&Stratton	Rated load	200
Intake method	Natural inhalation	Maximum load	300
Cylinder	1	Machine weight	
Rated power(kw/r/min)	7.5/8.6/9.9	Operating weight(kg)	880
Travel system		Bucket	
Travel speed (km/h)	6	Bucket capacity(m³)	0.1
Rated pressure(Mpa)	16	Dimensions (mm)	
Climbing ability(%)	25	Overall dimensions	2130*1050*1300
Oil capacity		Length including bucket	2130
Fuel tank capacity (L)	5	Length excluding bucket	1726
Emission standard	EPA/ERUO5	Vehicle width	1000
Working range (mm)		Bucket width	1050
Maximum breakout force	3.5KN	Wheelbase	710
Max. dumping height	1367	Track model	18*8.5-8
Max. loading height	1680		
Max. operating height	2400		
Height to bucket pin	1840		
Min height	1300		
Ground clearance	130		
Dumping distance	258		
Max height bucket dump angle	63°		
Departure angle	21°		



* High-efficiency hydraulic oil cooler
* Worlk light
* Heavy-duty Reinforced Tires



* Vibration-proof, Anti-drop, Stable Hinge, Prevent Pin Shaft Falling-off



* Quick-connect fitting, leak-proof seal, fast attachment replacement

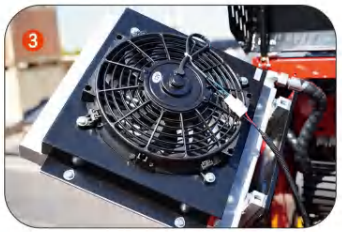

* Radiator to reduce oil temperature



* High-flow Dual Pump



* Construction Machinery Instrument Control Panel

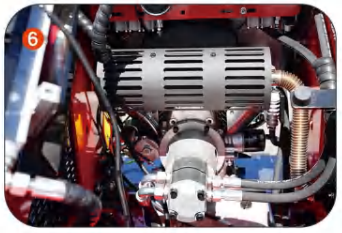

* Muffler reduces exhaust noise; hydraulic gear pump supplies high-pressure oil for whole machine









• KC360

SKID steer loader

LEKING



* High-efficiency hydraulic oil cooler



* Worlk light



* High-stabilityTriangular Rubber Tracks

Main Technical Parameters of Skid Steer Loader

Engine		Load Capacity(kg)	
Engine model	Koop/Rato/Briggs&Stratton	Rated load	200
Intake method	Natural inhalation	Maximum load	300
Cylinder	1	Machine weight	
Rated power(kw/r/min)	7.5/8.6/9.9	Operating weight(kg)	941
Travel system		Bucket	
Travel speed (km/h)	6	Bucket capacity(m^3)	0.1
Rated pressure(Mpa)	16	Dimensions (mm)	
Climbing ability(%)	25	Overall dimensions	2092*1050*1300
Oil capacity		Length including bucket	2092
Fuel tank capacity (L)	5	Length excluding bucket	1726
Emission standard	EPA/ERUO5	Vehicle width	910
Working range (mm)		Bucket width	1050
Maximum breakout force	3.5KN	Track contact length	900
Max. dumping height	1386	Track model	180*72*35
Max. loading height	1720		
Max. operating height	2400		
Height to bucket pin	1857		
Min height	1300		
Ground clearance	173		
Dumping distance	250		
Max height bucket dump angle	63°		
Departure angle	22°		



* Vibration-proof, Anti-drop, Stable Hinge, Prevent Pin Shaft Falling-off



* Quick-connect fitting, leak-proof seal, fast attachment replacement

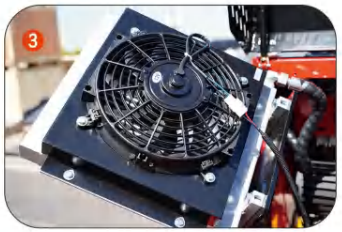

* Radiator to reduce oil temperature



* Supply power for engine starting and electrical components

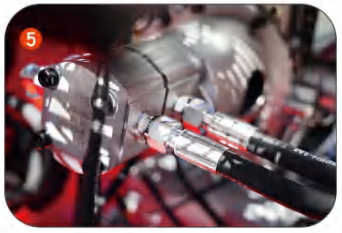

* High-flow Dual Pump

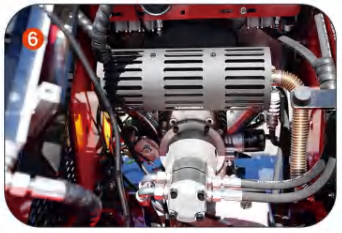

* Muffler reduces exhaust noise; hydraulic gear pump supplies high-pressure oil for whole machine









• KC460

SKID steer loader

LEKING



Main Technical Parameters of Skid Steer Loader

Engine		Load Capacity(kg)	
Engine model	Koop/Rato/Briggs&Stratton	Rated load	300
Intake method	Natural inhalation	Maximum load	400
Cylinder	2	Machine weight	
Rated power(kw/r/min)	8/15/19.2/17	Operating weight(kg)	1060
Travel system		Bucket	
Travel speed (km/h)	6	Bucket capacity(m^3)	0.1
Rated pressure(Mpa)	16	Dimensions (mm)	
Climbing ability(°)	25	Overall dimensions	2194*1050*1300
Oil capacity		Length including bucket	2194
Fuel tank capacity (L)	10	Length excluding bucket	1770
Emission standard	EPA/ERUO5	Vehicle width	1110
Working range (mm)		Bucket width	1050
Maximum breakout force	4.5KN	Tire model	18*8.5－8
Max. dumping height	1370		
Max. loading height	1680		
Max. operating height	2290		
Height to bucket pin	1835		
Min height	1300		
Ground clearance	125		
Dumping distance	261		
Max height bucket dump angle	63°		
Departure angle	18°		



• Enable rapid movement under no-load conditions to improve operation speed



• Quick-connect fitting, leak-proof seal, fast attachment replacement

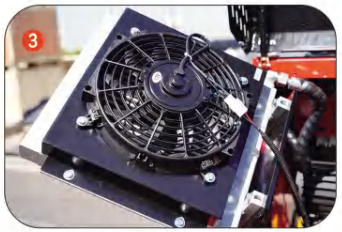

• Radiator to reduce oil temperature



• Rotary Main Power Switch for Quick Emergency Power Cut-off



• Construction Machinery Instrument Control Panel

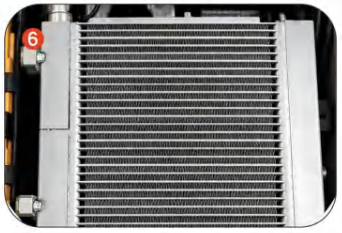

• High-efficiency hydraulic oil cooler maintains stable hydraulic system oil temperature









• KW460

SKID steer loader

LEKING



• Hydraulic cylinder



• Worlk light



• Deep-groove large-lug tread pattern for strong traction

Main Technical Parameters of Skid Steer Loader

Engine		Load Capacity(kg)	
Engine model	Koop/Rato/Briggs & Stratton	Rated load	300
Intake method	Natural inhalation	Maximum load	400
Cylinder	2	Machine weight	
Rated power(kw/r/min)	8/15/19.2/17	Operating weight(kg)	1060
Travel system		Bucket	
Travel speed (km/h)	6	Bucket capacity(m^3)	0.1
Rated pressure(Mpa)	16	Dimensions (mm)	
Climbing ability(°)	25	Overall dimensions	2194*1050*1300
Oil capacity		Length including bucket	2194
Fuel tank capacity (L)	10	Length excluding bucket	1770
Emission standard	EPA/ERUO5	Vehicle width	1110
Working range (mm)		Bucket width	1050
Maximum breakout force	4.5KN	Tire model	18*8.5－8
Max. dumping height	1370		
Max. loading height	1680		
Max. operating height	2290		
Height to bucket pin	1835		
Min height	1300		
Ground clearance	125		
Dumping distance	261		
Max height bucket dump angle	63°		
Departure angle	18°		



• Enable rapid movement under no-load conditions to improve operation speed



• Quick-connect fitting, leak-proof seal, fast attachment replacement

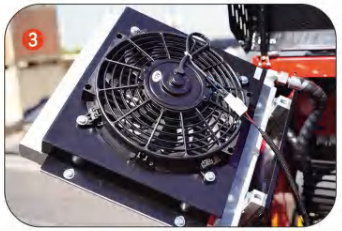

• Radiator to reduce oil temperature



• Rotary Main Power Switch for Quick Emergency Power Cut-off



• Construction Machinery Instrument Control Panel

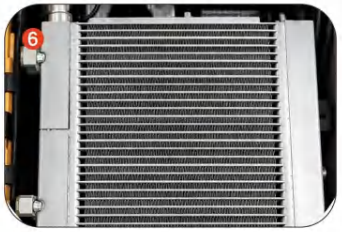

• High-efficiency hydraulic oil cooler maintains stable hydraulic system oil temperature









• KC480

SKID STEER LOADER

LEKING

Main Technical Parameters of Skid Steer Loader

Engine		LoadCapacity(kg)	
Engine model	KOOP/Rato	Rated load	260
Cylinder	1	Maximum load	290
Intake method	Natural inhalation	Machine weight	
Rated power(kw)	7.6(7)/7.9	Operating weight(kg)	989
Travel system		Bucket	
Travel speed (km/h)	0-6km/h	Bucket capacity(m³)	0.1
Tire model	23*8.5-12	Dimensions	
Climbing ability	25°	Overall dimensions(mm)	2281*1050*1300
Oil capacity		Length including bucket(mm)	2281
Fuel tank capacity (L)	5	Length excluding bucket(mm)	1880
Emission standard	EPA/ERUO5	Maximum breakout force(KN)	3.5
Working range (mm)		Wheelbase(mm)	800
Max loading height	2460	Rated pressure(Mpa)	16
Max dumping height	1376	Vehicle width(mm)	959
Max operating height	2460	Bucket width(mm)	1050
Height to bucket pin	1872		
Max height bucket dump angle	63°		
Min height	1300		
Departure angle	18°		
Ground clearance	193		
Dumping distance	600		



• Center console

• Ergonomic seat

• Support roller



• Equipped with a KOOP/Rato engine, providing strong power.



• Bucket capacity 0.1 cubic meters, high working efficiency.



• Triangular rubber tracks can form a long and stable contact area.

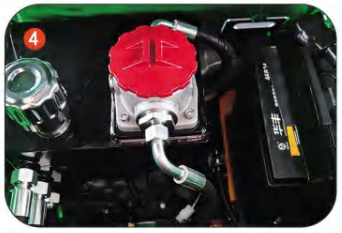

• The hydrostatic drive system uses high-quality pumps and hydraulic oil, ensuring smooth startup and powerful propulsion.



• Air filters, oil filters, and belts are right in front of you.



• Quick connector, can quickly change different accessories.









• KW480

SKID STEER LOADER

LEKING

Main Technical Parameters of Skid Steer Loader

Engine		LoadCapacity(kg)	
Engine model	KOOP/Rato	Rated load	250
Cylinder	2	Maximum load	350
Intake method	Natural inhalation	Machine weight	
Rated power(kw)	14/15	Operating weight(kg)	1200
Travel system		Bucket	
Travel speed (km/h)	0-6km/h	Bucket capacity(m^3)	0.1
Track contact length	180*72*45	Dimensions	
Climbing ability	25°	Vehicle width(mm)	1089
Oil capacity		Rated pressure(Map)	16
Fuel tank capacity (L)	10	Bucket width(mm)	1150
Emission standard	EPA/ERUO5	Maximum breakout force(KN)	4.5
Working range (mm)		Wheelbase(mm)	940
Max loading height	1650	Overall dimensions(mm)	2573*1150*1300
Max dumping height	1382	Length including bucket(mm)	2573
Max operating height	2466	Length excluding bucket(mm)	2100
Height to bucket pin	1877		
Max height bucket dump angle	63°		
Min height	1300		
Departure angle	15°		
Ground clearance	200		
Dumping distance	550		



• Center console



• Ergonomic seat



• Anti-slip and wear-resistant tires



• Equipped with a KOOP/Rato engine, providing strong power.



• Bucket capacity 0.1 cubic meters, high working efficiency.



•



• The 360-degree body rotates freely, and the smart body facilitates outdoor work.

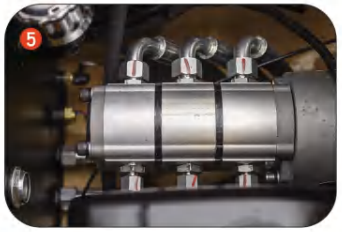

• High-flow dual pump, energy-saving and power-saving, reduces heat generation.



• Quick connector, can quickly change different accessories.









Drone



Model	KD-FT60
Maximum take-off weight	65kg
Duration	>50min
Maximum load	30kg
Symmetrical wheelbase	1850mm
Laser ranging	500mm
Working temperature	-20°C~60°C



Model	KD-FT6
Maximum take-off weight	9kg
Maximum load	8kg
Symmetrical wheelbase	1650mm
Flight altitude	5000m
Working temperature	-20°C~60°C
Duration	>60min (load 3kg)



Model	KD-J40
Maximum take-off weight	45kg
Communication Distance	15km
Maximum load	12kg
Flight altitude	5000m
Maximum Range	25km
Battery life	≤60min



Model	KD-FT150PRO
Maximum take-off weight	110kg
Maximum load	60kg
Cruising speed	36km/h
Symmetrical wheelbase	4500m
Laser ranging	500m
Working temperature	-20℃~60℃



Model	KD-ST50
Maximum take-off weight	118kg
Maximum Load Capacity	50kg
Empty Machine Weight	38kg
Maximum Wind Resistance Capacity	15m/s
Endurance Time	73min
Symmetrical Wheelbase	2308mm



Model	KD-T100
Maximum take-off weight	217kg
Cruise Speed	36km/h
Maximum Load Capacity	100kg
Symmetrical wheelbase	≥4000m
Standard Takeoff Weight	197kg
Working temperature	-20℃~+50℃



Model	KD-VT40
Maximum take-off weight	24kg
Body Length	1260mm
Wingspan	3200mm
Landing Gear Height	190mm
Maximum load	5kg
Maximum Horizontal Flight Height	3500m

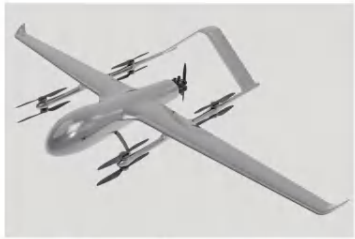

Model	KD-MT300
Load Capacity	50kg
Flight Altitude	1000m
Body Length	3.85m
Wingspan	7.5m
Ceiling Altitude	5000m
Cruise Flight Time	2h



Model	Forest Fire Truck
Overall Dimensions	5980*2200*3050mm
Fuel	Diesel
Power	103kw
Curb Weight	4300kg
Front Passenger	3
Displacement	2.3L

Application Scenarios



Forest Firefighting



Emergency Rescue



High-rise Firefighting

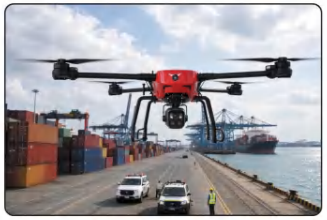

Port Logistics



Park Logistics



Chemical Firefighting



Emergency Rescue



Surveying & Inspection



Eco Security



Airdrop Supply Box



Forest Fire Extinguishing Bomb

Excavator Accessories


200 Bucket


400 Bucket


Snow Shovel


V Ditch Bucket


500/600/800/1000mm
Plain Bucket


600/800mm
Tilting Bucket


Tilt Rotary Hitch


Shell Bucket


Sieve Bucket


Rotary Bucket


Automatic Quick Hitch


Mechanical Quick Hitch


Thumb Bucket


Hydraulic Thumb


360° Swing Grab


Wood Grabber


Trailer


Trailer2


Double Hook Ripper


Ripper


Trailer3


Thumb


Auger Drill


Hydraulic Hammer


Wood Chopping Machine


Cone Log Splitter


Plate Compactor


Pallet Fork


Ditcher


Milling head


Ramps


Snow Plow


Rock Saw


Rake


Sweeper


Snow Blower


0.8T-5T
Lawn mower


3T-50T
Lawn Mower


Box Breaker


Mechanical Thumb

Excavator Chopping Wood Machine

Hydraulic Quick Hitch

Loader Accessories

LEKING

With grapple bucket

Enclosed Sweeper

Lawn mower

Backfilling machine

Mixing barrel

Snow blower

Hydraulic breaker

Wood chipper

Leveler

Concrete mixing bucket

Angle Sweeper

Soil Leveler

Auger

Trencher

4-in-1 bucket

Rotary tiller

Rock bucket

Log grapple

Stump grinder

Holding cips

Pallet forks

High flip bucket

Log splitter

Snow plow

Dig straight

LEKING

LEKING

GLOBAL MINI EXCAVATOR CUSTOMIZATION EXPERT



FOCUS ON R&D AND PRODUCTION OF MINI EXCAVATORS

Email: sales@leking.net
Web: www.leking.com/www.leking.net
ADD: No.8 Shanbo Road,High Tech Zone,Jining,Shandong,China

SHANDONG LEKING MACHINERY MANUFACTURING CO., LTD