INTEGRITY-BASED CUSTOMER-FIRST
诚信为本 用户至上

FEIFAN MINING



山东非凡矿山机械有限公司

Shandong Extraordinary Mining Machinery Co., Ltd

关于我们

Email:

info@tfindustry.com

Address：

Mining Equipment Manufacturing Industria Park, Hujizhen Town, Huimin County,

Binzhou City, Shandong Province, China

Website:

www.tfindustry.com

Integrated Solution For Ineelligent Green Mine
And
Construction Solid Waste Disposal

智能绿色矿山·建筑固废处理一体化解决方案

ABOUT FEIFAN

关于非凡

我们的集团公司成立于 2009 年，位于山东省滨州市的矿山设备核心产业基地。我们专注于制造砂石开采设备并为其提供 EPC 承包服务已有 17 年的经验。我们是一家一站式、实力雄厚的综合型工厂，集研发、生产、交钥匙承包和售后服务于一体。

我厂占地面积 66000 平方米，拥有 156 名车间员工以及由 13 名资深工程师组成的技术研发团队，并拥有超过 10 项国家发明专利。凭借现代化的生产线以及贯穿整个流程的严格质量控制措施，我厂的主要产品包括破碎机、振动筛、制砂机、洗砂机、给料机等。

我们的设备与生产线已赢得了墨西哥、印度尼西亚、南非、埃

Our group company founded in 2009 and located in the core mining equipment industrial base of Binzhou, Shandong Province. With 17 years of dedicated focus on manufacturing sand and gravel mining equipment and providing EPC contracting services for sand and gravel aggregates, we are a one-stop, powerful source factory integrating R&D, production, turnkey contracting, and after-sales service.

Our factory covers an area of 66000 Square meters having 156 workshop employees, and technical R&D team consisting of 13 senior engineers, as well as more than ten national invention patents. Relying on modern production lines and rigorous quality control throughout the entire process, Our main products include crushers, vibrating screens, sand maker, sand washing machines, feeders.

Our equipment and production lines have satisfied our customers in Mexico, Indonesia, South Africa, Egypt, Kazakhstan.ment and supporting services, and is committed to becoming a professional and reliable comprehensive service provider for mining machinery.





Expert in Mining Equipment

Offering Screens, Machinery & Full EPC Sand Production Line Solutions

深耕矿机领域，提供筛网、设备及 EPC 全流程砂石生产线服务



ALL PRODUCTS



1 Screening Machine



2 Jaw Crusher



3 Cone Crusher

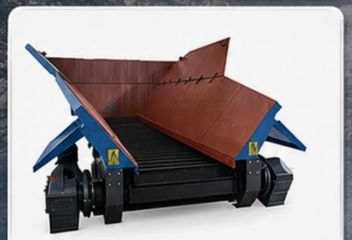

4 Feeder

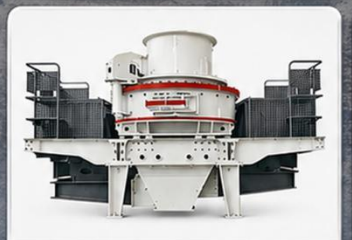

5 VSI Sand Maker



6 Screw Sand Washer



7 Belt Conveyor



8 Wheel Sand Washer



9 Impact Crusher

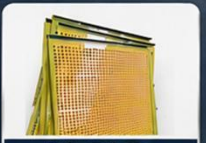

Polyurethane Screen Mesh



Anti-clogging Sieve



Modular Screen Plate



Flip-Flow Screen Mesh



Rod Screen Mesh



Woven Screen Mesh



Fine Screen Mesh

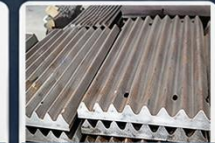

Mining Machinery Spare Parts



Mining Machinery Spare Parts



Mining Machinery Spare Parts

Contents 目录

02 公司简介 Company Profile

公司规模与团队力量 公司成就与行业影响
Company Size and Team Strength, Company Achievements and Industry Influence

04 破碎机械 Crusher

颚式破碎机 Jaw Crusher
圆锥破碎机 Cone Crusher
反击式破碎机 Impact Crusher
锤式破碎机 Hammer Crusher
移动式破碎机 Mobile Crusher
冲击破碎机 / 制砂机 Vertical Shaft Impact Crusher (VSI Crusher)

07 筛分机械 Screen Machine

香蕉筛 Banana Screen
圆振筛 Circular Vibrating Screen
水平筛 Horizontal Vibrating Screen
直线筛 Linear Vibrating Screen
脱水筛 Dewatering Screen

07 给料机械 Feeder

振动给料机 Vibrating Feeder
板式给料机 Chain Plate Feeder
直线给料机 Linear Feeder

07 洗砂机械 Sand Washer

轮式洗砂机Wheel Sand Washer
螺旋洗砂机Screw Sand Washer

21 皮带输送机 Belt conveyor

21 矿山机械零部件 / 易损件 Mining Machinery Spare Parts

筛网&破碎机配件&皮带机配件 Screens and Accessories

23 干法砂石骨料生产线案例 EPC Case

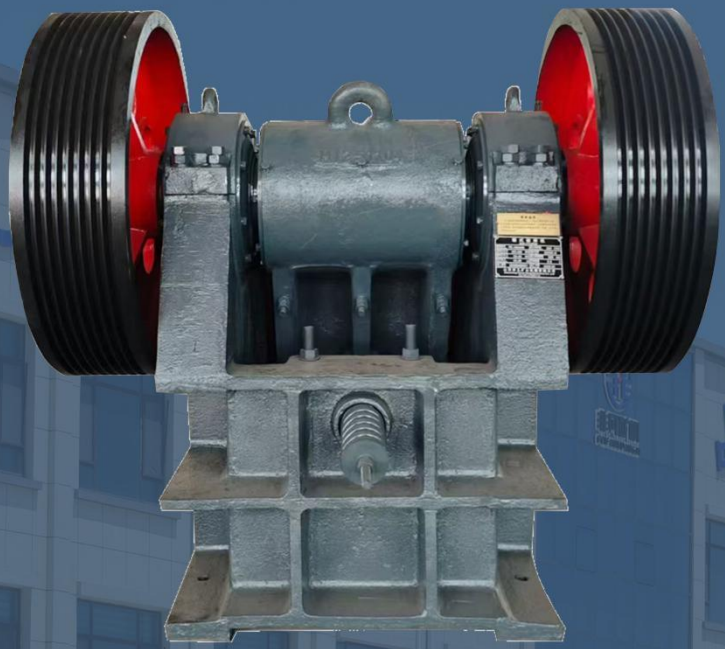







PE Series jaw crusher Product introduction PE系列颚式破碎机产品介绍

PE系列鄂式破碎机主要用于对各种矿石与大块物料的中等粒度破碎，也可用于生产路基所需石料以及建筑用的石子骨料。鄂式破碎机广泛运用于矿山、冶炼、建材、公路、铁路、水利和化工等行业，最适宜于破碎抗压强度不高于300MPa的各种软硬矿石。

PE Series jaw crusher is mainly used tocrush all kinds of ores and bulk materials

withmedium particle size, and can also be used toproduce stone materials for Subgrade andstone aggregate for construction. The jawcrusher is widely used in mining, smelting,building materials, highway, railway, waterconservancy, chemical industry and other

PE Series jaw crusher Product introduction PE系列颚式破碎机产品介绍

型号	进料口尺寸（mm）	最大进料粒度（mm）	出料口调整范围（mm）	产量（t/h）	电机功率（kw）
Model	Feed Opening Size (mm)	Max Feed Size (mm)	Discharge Opening Range (mm)	Capacity (t/h)	Motor Power (kW)
PE400×600	400×600	340	40－100	16－65	30-6
PE500×750	500×750	425	50－100	50－100	55
PE600×900	600×900	500	65－160	50－120	55－75
PE750×1060	750×1060	630	80－140	115－210	110
PE800×1060	800×1060	650	100－200	136－230	110
PE900×1200	900×1200	750	100－200	144－310	110
PE1000×1200	1000×1200	850	195－265	315－350	110
PE1200×1500	1200×1500	1020	150－300	400－800	220
PE1500×1800	1500×1800	1200	220－350	450－1000	355
PEX250×1000	250×1000	210	15－50	15－50	30
PEX250×1200	250×1200	210	40－80	20－60	37
PEX300×1300	300×1300	280	40－80	20－60	37
PEX300×1300	300×1300	280	40－80	20－60	37
PEX500×2000	500×2000	500	40－100	120－160	110









PEV series European jaw crusher Product introduction

PEV系列欧版颚式破碎机产品介绍

PEV系列颚式破碎机是最适宜于破碎机抗压强度高于300Mpa的矿石、岩石、矿渣等，主要用于冶金、矿山、化工、水泥、建筑、耐火材料及陶瓷等工业部门作中碎和细碎各种中硬矿石和岩石等。当考虑高效地对坚硬、强磨蚀性物料进行破碎时，应首先选择采用了国际最先进的破碎技术和制造水平的PEV系列欧版颚式破碎机。

PEV series jaw crusher is the most suitable crusher for ore, rock and slag with compressivestrength higher than 300mpa. It is mainly used for crushing various medium hard ores androcks in metallurgy, mining, chemical industry, cement, construction, refractory and ceramicsindustries. When considering the efficient crushing of hard and strong abrasive materials, PEVseries jaw crusher with the most advanced international crushing technology and manufacturing level should be selected first.industries. It is most suitable for crushing various soft and

PEV series European jaw crusher Product introduction

PEV系列欧版颚式破碎机产品介绍

型号Model		PEV500×750	PEV600×900	PEV750×1060	PEV950×1250	PEV1200×1600	PEV1500×2000
进料口宽度（mm）Feed Opening Width (mm)		750	900	1060	1250	1600	2000
进料口深度（mm）Feed Opening Depth (mm)		500	600	750	950	1200	1500
电机功率（kw）Motor Power (kW)		55-75	90	110	150	250	400
产品粒度 Product Size	紧边排料口 Closed Side Setting (CSS)	tph	tph	tph	tph	tph	tph
0-30	20						
0-35	25						
0-45	30						
0-60	40	55-80					
0-75	50	70-90					
0-90	60	80-110	120-155				
0-105	70	105-130	140-180	155-200			
0-120	80	120-150	160-210	175-230			
0-135	90	130-170	180-235	200-260			
0-150	100	150-190	200-260	220-290	290-380		
0-185	125	190-260	250-325	280-365	350-455		
0-225	150	250-340	300-390	335-435	410-535	520-675	
0-260	175		350-455	390-510	470-610	595-775	760-990
0-300	200			445-580	530-690	675-880	855-1110
0-340	225				590-770	750-975	945-1230
0-375	250				650-845	825-1070	1040-1350
0-410	275					900-1170	1130-1470
0-450	300					980-1275	1225-1590



GP单缸圆锥破碎机
GP Single Cylinder Cone Crusher



HP多缸液压圆锥破碎机
HP Multi-cylinder Hydraulic Cone Crusher



PY圆锥破碎机
PY series cone crusher



西蒙斯TQ弹簧圆锥破碎机
Symons TQ Spring Cone Crusher



复合系列弹簧圆锥破碎机
Compound Series Spring Cone Crusher

Cone Crusher Product Introduction 圆锥破碎机产品介绍

圆锥破碎机是一款高效破碎设备，适用于中硬至极硬物料的二段、三段及细碎作业，广泛应用于矿山、采石场、骨料生产、建筑、冶金以及基建工程项目。设备依靠动锥与固定衬套之间持续挤压实现物料破碎。具备破碎效率高破碎比大、成品粒度均匀、运行稳定、运营成本低等优势。

排料口可调节，客户能够根据生产需求加工出不同规格的成品骨料。
A cone crusher is a high-efficiency crushing machine designed for secondary, tertiary, and fine crushing of medium-hard to extremely hard materials. It is widely used in mining, quarrying, aggregate production, construction, metallurgy, and infrastructure projects.
The machine crushes materials through continuous compression between the moving cone and the fixed concave. It offers high crushing efficiency, a large crushing ratio, uniform particle size, stable operation, and low operating costs. The adjustable discharge opening allows users to produce different finished aggregate sizes according to specific production requirements.

Cone Crusher Product Specifications 圆锥破碎机产品参数

PY圆锥破碎机 PY Series Cone Crusher

型号 Model	破碎锥直径 The diameter of the conical chamber(mm)	最大进料粒度 Max.feed size(mm)	排料口调整范围 Adjustable range of discharge opening(mm)	处理能力 Capacity (t/h)	电机功率 Motor power (kw)	主动轴摆动次数 Swing frequency of drive-shaft (r/min)	重量 Weight (t)	外型尺寸 Dimension (mm)
PYB900	900	115	12-50	50-90	55	333	11.2	2692x1640x2350
PYZ900	900	60	5-20	20-65	55	333	11.2	2692x1640x2350
PYD900	900	50	3-13	15-50	55	333	11.3	2692x1640x2350
PYB1200	1200	145	20-50	110-168	110	300	24.7	2790x1878x2844
PYZ1200	1200	100	8-25	42-135	110	300	25	2790x1878x2844
PYD1200	1200	50	3-15	18-105	110	300	25.3	2790x1878x2844
PYB1750	1750	215	25-60	280-480	160	245	50	3910x2894x3809
PYZ1750	1750	185	10-30	115-320	160	245	50	3910x2894x3809
PYD1750	1750	85	5-15	75-230	160	245	50	3910x2894x3809
PYB2200	2200	300	30-60	590-1000	280	220	80	6440x2900x5057
PYD2200	2200	100	5-15	120-340	280	220	81.4	6440x2900x5057

GP单缸圆锥破碎机 GP Single Cylinder Cone Crusher

Model 机型	Crushing Chamber Type 腔型	Feed Opening (mm) 给料口 (mm)	Max. Feed Size (mm) 最大给料粒度 (mm)	Min. Discharge Size (mm) 最小排料 (mm) Discharging Size(mm) 冲程Stroke			Max. Discharge Size (mm) 最大排料 (mm) 冲程Stroke			Motor Power (kW) 电机功率 (kw)	Main Unit Weight (kg) 主机重量 (kg)
TQGP100				16	22		16	22		90	6000
	A	150	120	12	15		39	37			
	B	130	105	10	11		33	31			
	C	100	85	7	9		33	30			
	D	40	32	5	6		31	29			
TQGP200				18	25		18	25		160	10600
	A	220	180	18	22		32	30			
	B	150	120	15	19		32	30			
	C	80	60	9	12		32	30			
	D	40	32	6	8		32	30			
TQGP300				25	32		25	32		250	15500
	A	230	190	20	25		45	40			
	B	150	125	17	20		45	40			
	C	80	60	10	13		40	35			
	D	40	32	6	8		40	35			
TQGP500				25	32	40	25	32	40	315	22500
	A	230	180	22	26	30	50	45	40		
	B	150	125	19	22	26	48	43	38		
	C	100	80	12	14	16	40	35	30		
	D	50	40	8	10	12	30	25	20		
TQGP600				34	42	50	34	42	50	355	27000
	A	280	220	22	26	30	45	35	30		
	B	150	125	19	22	26	45	35	30		
	C	100	80	12	14	16	35	30	25		

技术参数（中碎型）Technical Specifications (Medium Crushing Type)

机型	腔型	给料口 (mm)	最大给料粒度	最小排料 (mm) 冲程	冲程	冲程	最大排料 (mm) 冲程	冲程	冲程	电机功率 (kw)	主机重量 (kg)
TQGPZ100				16	22		16	22		75-90	8300
	A	300	250	35	35		65	60			
	B	250	210	35	35		65	60			
TQGPZ200				18	25		18	25		110-160	11800
	A	330	280	27	30		65	60			
	B	250	210	25	28		60	55			
TQGPZ300				25	32		25	32		160-250	20000
	A	380	320	28	32		73	69			
	B	280	240	26	30		66	62			
TQGPZ500				18	25	32	18	25	32	250-315	33000
	A	500	420	50	55	60	80	75	70		
	B	380	320	40	45	50	70	65	60		
TQGPZ600				18	25	32	18	25	32	355	32700
	A	500	420	50	55	60	105	100	95		
	B	380	320	45	45	55	105	100	95		

复合系列弹簧圆锥破碎机 Compound Series Spring Cone Crusher

复合系列弹簧圆锥破碎机 【腔形说明：C=粗型，M=中型，F=细型，EF=超细型。】
Compound Series Spring Cone Crusher[Chamber Note: C-Coarse, M-Medium, F-Fine, EF-Extra Fine]

型号 Model	腔形 Chamber	最大进料粒度 (mm) Max. Feed Size (mm)	最小排料口尺寸 (mm) Min. Discharge Opening (mm)	电机功率 (kW) Motor Power (kW)	处理能力 单位：t/h。Capacity (t/h)										重量 (t) Weight (t)
					6mm	10mm	13mm	16mm	19mm	22mm	25mm	38mm	51mm	64mm	
TQ100	C	160	13	110			80	100	135	150	175	125			13
	M	115	10	110		65	75	90	120	135	150				
	F	80	8	110	52	62	72	78	115						
	EF	50	6	110	60	65	65	70	102						
TQ1160	C	180	13	132			115	135	150	180	200	260			18
	M	130	10	132		100	110	120	135	165	175				
	F	90	10	132		80	105	110	140						
	EF	60	6	132	60	74	105	110	130						
TQ1300	C	200	16	185				150	180	200	230	310	390		25
	M	150	13	185			115	140	160	190	210				
	F	102	10	200		90	115	145	160						
	EF	70	8	200		88	110	135	155						
TQ1400	C	215	19	220					200	220	260	350	440		28
	M	160	16	220				155	180	200	220				
	F	115	13	220			150	190	210	230					
	EF	76	8	220		122	148	185	200						
TQ1650	C	235	22	250						265	310	420	525	580	40
	M	175	19	250					215	240	265	320			
	F	130	13	250			180	210	235	257	275				
	EF	90	10	250		148	170	200	220						
TQ1680	C	350	22	300						330	390	520	655	725	50
	M	203	16	300				230	270	300	330				
	F	140	13	300			185	225	265	340					
	EF	95	10	300		182	220	260	335						

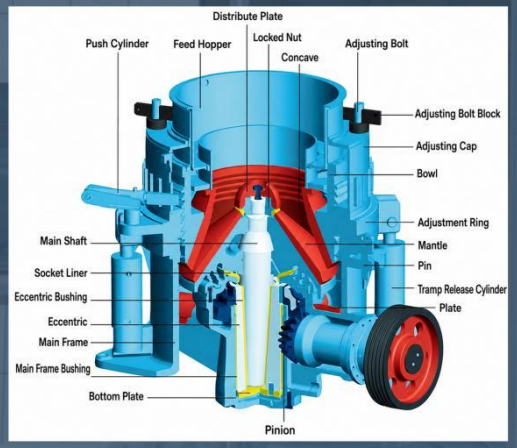



HP多缸液压圆锥破碎机 HP Multi-cylinder Hydraulic Cone Crusher







型号 Model	破碎腔型 Cavity Type	标准型 Standard Type		短头型 Short Type		功率 Power(kw)	生产能力 Capacity (t/h)
		给料口尺寸 Feed Size(mm)	最小排料口 Min Discharging Size(mm)	给料口尺寸 Feed Size(mm)	最小排料口 Min Discharging Size(mm)		
HPS200	超粗 Extra Coarse					132-200	90-250
	粗型 Coarse	185	19	76	10		
	中型 Medium	125	17	54	6		
	细型 Fine	95	13	23	6		
	超细 Extra Fine			10	5		
HPS300	超粗 Extra Coarse	230	25			180-250	115-440
	粗型 Coarse	210	20	75	10		
	中型 Medium	150	15	50	8		
	细型 Fine	105	10	20	6		
	超细 Extra Fine			20	6		
HPS400	超粗 Extra Coarse	295	30			280-355	140-630
	粗型 Coarse	250	25	90	10		
	中型 Medium	195	20	50	8		
	细型 Fine	110	14	40	6		
	超细 Extra Fine			30	6		
HPS500	超粗 Extra Coarse	330	30			355-450	175-790
	粗型 Coarse	285	25	90	13		
	中型 Medium	200	20	55	10		
	细型 Fine	133	16	40	8		
	超细 Extra Fine			35	6		
HPS800	超粗 Extra Coarse	353	32			550-630	260-1200
	粗型 Coarse	297	32	155	13		
	中型 Medium	267	25	92	10		
	细型 Fine	219	16	33	6		
	超细 Extra Fine						

西蒙斯TQ弹簧圆锥破碎机 Symons TQ Spring Cone Crusher

型号	腔形	推荐的最小排矿口A(mm)	对应于推荐的最小排矿口A的给料口		对应排矿口的生产能力 The corresponding row ore production capacity (t/h)												主电机 V/KW
Model	Chamber	Recommended Min Discharge A(mm)	Feed Opening B(mm) Closed Side	Feed Opening B(mm) Open Side	9	13	16	19	22	25	31	38	51	64	76	89	102	Main Motor V/KW
TQ75B	细型	9	83	102	45	59	72	81	91									380/75
	粗型	18	159	175		59	72	91	109	118	136	163						
	特粗型	25	163	178						128	147	175	196					
TQ155B	细型	13	109	137		109	127	145	154	163	181							380/185
	中型	16	188	210			132	159	172	200	227	253	309					
	粗型	19	216	241				172	195	218	249	295	378					
	特粗型	25	238	259						236	276	324	398	455				
TQ240B	细型	15	188	209			181	204	227	258	295	327						380/240
	中型	22	213	241					258	290	336	381	437	437				
	粗型	25	241	269						354	417	454	610	610				
	特粗型	38	331	368								538	630	743				
TQ400B	细型	19	253	278				420	450	550	680	900						380/400
	中型	25	303	334						670	800	910	1100					
	粗型	31	334	369							870	930	1200	1400				
	特粗型	38	425	460								970	1300	1500				

型号	腔形	推荐的最小排矿口A(mm)	对应于推荐的最小排矿口A的给料口		对应排矿口的生产能力 The corresponding row ore production capacity (t/h)											主电机 V/KW
Model	Chamber	Recommended Min Discharge A(mm)	Feed Opening B(mm) Closed Side	Feed Opening B(mm) Open Side	3	5	6	10	13	16	19	25	29	32	38	Main Motor V/KW
TQ75D	细型	3	13	41	27	41	54	68	90							
	粗型	3	33	60	27	41	54	68	90	100						380/75
	特粗型	6	51	76			59	73	95	113	127					
TQ155D	细型	3	29	64	36	59	82	104	136	163						
	中型	6	54	89			82	104	136	163						380/155
	粗型	8	70	105				109	159	181	200	227				
	特粗型	16	98	133							209	236				
TQ240D	细型	5	35	70		90	136	163	209							
	中型	6	54	89			136	163	209	253	281					380/240
	粗型	10	98	133				190	253	281	308	336				
	特粗型	13	117	133					253	281	308	336				
TQ400D	细型	6	51	127		120	160	240	315	360						
	中型	10	95	133				240	315	360	420					380/400
	粗型	13	127	178					350	380	450	550				
	特粗型	16	152	203						400	465	550	620			

Impact Crusher Product Introduction 反击破碎机产品介绍



PF Series Impact Crusher

PF系列反击式破碎机适用于中低硬度物料的中细碎作业，具有破碎比大、成品粒形好、结构简单、运行稳定及维护方便等特点。

The PF Series Impact Crusher is designed for medium and fine crushing of low- to medium-hard materials. It offers a high crushing ratio, excellent particle shape, reliable operation, simple structure and convenient maintenance, making it suitable for aggregate production, mining, construction and recycling applications.

PFW Series Impact Crusher

PFW系列欧版反击式破碎机采用先进液压调节系统，破碎能力强、自动化程度高、维护便捷，适用于各类中等硬度物料破碎。

PFW Series Impact Crusher adopts an advanced hydraulic adjustment system. It delivers strong crushing capacity, high automation and easy maintenance, and is suitable for crushing various medium-hard materials.





PFQ Series Vortex Powerful Impact Crusher

PFQ系列涡旋强力反击式破碎机采用涡旋破碎腔设计，冲击力强破碎效率高、粒形均匀，适用于矿山、建材及砂石骨料生产。

PFQ Series Vortex Heavy-duty Impact Crusher adopts vortex crushing chamber design. It delivers powerful impact force, high crushing efficiency and uniform particle shape, and is applicable to mining, building materials and sand & aggregate production.

Impact Crusher Product Specifications 反击破碎机产品参数

PF系列反击式破碎机 PF series impact crusher

型号	转子尺寸（mm）	进料口尺寸（mm）	最大进料粒度（mm）	产量（t/h）	电机功率（kw）
Model	Rotor Size (mm)	Feed Opening Size (mm)	Max Feed Size (mm)	Capacity (t/h)	Motor Power (kW)
PF-1010	Φ1000×1050	400×1080	350	50-80	55-75
PF-1210	Φ1250×1050	400×1080	350	80-120	110-132
PF-1214	Φ1250×1400	400×1430	350	100-160	132-160
PF-1315	Φ1320×1500	860×1540	400	150-220	220
PF-1320	Φ1320×2000	860×2040	400	160-220	220
PF-1515	Φ1500×1500	860×1540	400	200-280	280-315
PF-1520	Φ1500×2000	860×2040	400	200-320	315
PF-1620	Φ1600×2000	860×2040	400	260-360	355

PFQ系列涡旋强力反击式破碎机PFQ series vortex strong impact crusher

型号Model	Max Feed Size (mm) 最大进料粒度（mm） <150MPa	Max Feed Size (mm) 最大进料粒度（mm） <250MPa	Discharge Size (mm)出料粒度（mm）	Capacity (t/h) 产量（t/h）	Motor Power (kW)电机功率（kw）
PFQ-1110	400	200	0-35 (80-90%)	100	110
PFQ-1113	400	200	0-40 (80-90%)	150	132
PFQ-1313	500	250	0-40 (80-90%)	200	200
PFQ-1315	600	300	0-40 (80-90%)	280	250
PFQ-1320	600	300	0-40 (80-90%)	350	200×2
PFQ-1515	800	400	0-40 (80-90%)	400	220×2
PFQ-1520	800	400	0-40 (80-90%)	500	250×2

PFW系列欧版反击式破碎机 PFW series European impact crusher

型号	规格	进料口尺寸（mm）	最大进料口尺寸（mm）	处理能力（t/h）	电机功率（kw）	外型尺寸（L×W×H）（mm）
Model	Specification	Feed Opening Size (mm)	Max Feed Size (mm)	Capacity (t/h)	Motor Power (kW)	Overall Dimension (L×W×H) (mm)
PFW1210Ⅱ	Φ1150×960	1100×1030	400	90-160	90-110	2400×1870×2550
PFW1214Ⅱ	Φ1150×1400	1100×1430	500	130-200	132-160	2400×2310×2550
PFW1315Ⅱ	Φ1300×1500	1200×1530	600	180-320	160-200	2700×2570×2800
PFW1318Ⅱ	Φ1300×1800	1200×1830	700	240-400	200-250	2700×2870×2800
PFW1210Ⅲ	Φ1150×960	570×990	250	70-120	90-110	2550×1870×2100
PFW1214Ⅲ	Φ1150×1400	570×1430	250	90-170	132-160	2550×2310×2100
PFW1315Ⅲ	Φ1300×1500	625×1530	300	180-270	160-200	2960×2570×2380
PFW1318Ⅲ	Φ1300×1800	625×1830	300	220-300	200-250	2960×2870×2380

Hammer Crusher Product Introduction 锤式破碎机产品介绍



GPC Series Hammer Crusher

GPC系列锤式破碎机适用于石灰石、煤炭等中低硬度物料的破碎，具有破碎比大、结构紧凑、运行稳定、维护方便等特点。

The GPC Series Hammer Crusher is designed for crushing limestone, coal and other low- to medium-hard materials. Featuring a high crushing ratio, compact structure, stable operation and convenient maintenance, it is widely used in mining, cement, building materials and aggregate production industries.

PCZ Series Heavy Hammer Crusher

PCZ系列重锤式破碎机采用重型转子和高耐磨锤头，可实现大块物料一次破碎成型，产量高、粒形好，并能简化生产流程。

The PCZ Series Heavy Hammer Crusher features a heavy-duty rotor and highly wear-resistant hammerheads. It can crush large materials to the required size in a single stage, delivering high capacity, well-shaped finished aggregates, reduced equipment investment and a simplified production process.

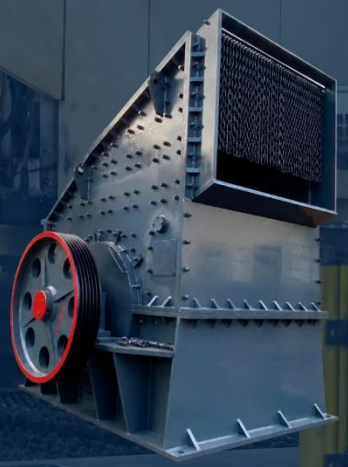



Heavy hammer crusher

重型锤式破碎机采用强力冲击破碎原理，破碎力度大、处理能力强出料均匀，适用于矿山、采石场及大型砂石骨料生产线。Heavy Hammer Crusher Based on powerful impact crushing principle, it has strong crushing force, high throughput and even discharge, ideal for mines, quarries and large sand aggregate production lines.

Hammer Crusher Product Specifications 锤式破碎机产品参数

GPC系列锤式破碎机 GPC series hammer crusher

型号	最大进料粒度（mm）	出料粒度（mm）	产量（t/h）	电机功率（kw）
Mode	Max Feed Size (mm)	Discharge Size (mm)	Capacity (t/h)	Motor Power (kW)
GPC1010	500	0-100	50-80	75
GPC1012	500	0-100	60-150	110-132
GPC1412	600	0-100	80-180	132-160
GPC1414	700	0-100	160-260	160-185
GPC1614	800	0-100	220-320	200-220
GPC1814	850	0-100	300-400	220-250
GPC1816	900	0-100	360-460	280-315
GPC2016	950	0-100	400-500	315-355
GPC2018	1000	0-100	450-550	250×2
GPC2218	1000	0-100	550-650	280×2

PCZ系列重锤式破碎机 PCZ series heavy hammer crusher

型号	最大进料粒度（mm）	出料粒度（mm）	产量（t/h）	电机功率（kw）
Mode	Max Feed Size (mm)	Discharge Size (mm)	Capacity (t/h)	Motor Power (kW)
PCZ1412	600	0-100	80-180	132-160
PCZ1414	700	0-100	160-260	160-185
PCZ1614	800	0-100	220-320	200-220
PCZ1814	850	0-100	300-400	220-250
PCZ1816	900	0-100	360-460	280-315
PCZ2016	950	0-100	400-500	315-355
PCZ2018	1000	0-100	450-550	250×2
PCZ2218	1000	0-100	550-650	280×2
PCZ2220	1000	0-100	700-900	315×2
PCZ2522	1000	0-100	800-1000	355×2
PCZ2822	1000	0-100	1000-1200	400×2
PCZ2824	1200	0-100	1200-1500	500×2
PCZ3026	1400	0-100	1500-1800	630×2

重型锤式破碎机(强击破) Heavy hammer crus

型号	转子尺寸（mm）	进料口尺寸（mm）	进料粒度（mm）	产量（t/h）	电机功率（kw）
Model	Rotor Size (mm)	Feed Opening Size (mm)	Feed Size (mm)	Capacity (t/h)	Motor Power (kW)
PCZ1308	1300×800	800×900	≤600	100-130	132
PCZ1510	1500×1000	1000×1000	≤700	160-210	132×2
PCZ1512	1500×1200	1200×1000	≤750	220-320	160×2
PCZ1615	1600×1500	1500×1000	≤1200	400-500	200×2
PCZ1620	1600×2000	2000×1100	≤1200	500-700	280×2
PCZ1818	1800×1800	1800×1200	≤1200	600-800	315×2
PCZ1820	1800×2000	2000×1200	≤1200	800-1200	400×2
PCZ2024	2000×2400	2400×1400	≤1200	1200-2000	450×2

非凡矿机 FEIFANKUANGJI 专注、优质、值得信赖!



Crawler mobile crushing station Product introduction
履带式移动破碎站产品介绍

履带自行移动式破碎站是一种高效率的破碎设备，采用自行驱动方式，技术先进，功能齐全。在任何地形条件下，此设备均可达到工作场地的任意位置。移动破碎站破碎比大，其优化设计可满足破碎机最需要的技术特点，生产率高，成品料粒度均匀一致。

The crawler mobile crushing station is a high-efficiency crushing equipment with self-propelled drive, advanced technology and complete functions.It can travel to any position on the worksite under all terrain conditions.Featuring a large crushing ratio, the optimized design fulfills the core technical requirements of crushers, delivering high productivity and uniform finished material particle size.

Crawler mobile crushing station Product Specifications
履带式移动破碎站产品参数

名称Equipment Name	型号Model	电机功率（kw）Motor Power（kW）
锤破机Hammer Crusher	1414-1614-1616-1816	160-220-250-280
颚破机Jaw Crusher	600×900-750×1060	75/110
圆锥破Cone Crusher	1350-1650	250-250
反击破Impact Crusher	1214-1315-1515	132-200-280
振动筛Vibrating Screen	1860-2480	22-30-45



轮胎式移动破碎站产品介绍

Tire-Type Mobile Crushing Station Product introduction

轮胎式移动破碎机机动性强、转场便捷，集给料、破碎、筛分于一体，适用于建筑垃圾、矿石及砂石骨料加工，具有安装快速、操作灵活、产能稳定等优势The tire-mounted mobile crusher offers excellent mobility and convenient relocation. Integrating feeding, crushing, and screening, it is ideal for processing construction waste, ores, and aggregates, featuring quick installation, flexible operation, and stable capacity.

Tire-Type Mobile Crushing Station Product Specifications

轮胎式移动破碎站产品参数

项目 Item	YZ938E69	YZ149E710	Y3S186F214	Y3S216F315	Y3S154CS75	Y3S186CS16
运输长度Transport Length	12500	13240	16000	16000	14000	16000
运输宽度Transport Width	2550	2550	3100	3200	3100	3100
运输高度Transport Height	3800	4540	4400	4500	4300	4500
最大长度Max. Length	13350	13900	16400	16400	14000	16400
最大宽度Max. Width	2900	2950	3400	3500	3400	3400
最大高度Max. Height	4360	5340	5100	5500	4700	4700
重量Weight(t)	39	57	41.5	47.5	34.5	49.5
轮胎配置 Tire Configuration	Tandem Two Axles	Tandem Three Axles	Tandem Three Axles	Tandem Three Axles	Tandem Two Axles	Tandem Three Axles
主机型号Main Machine Mode	ZSW380-96	ZSW490-110	PF1214	PF1315	CS75	CS160
	PE600×900	PE750×1060	3YZS1860	3YZS2160	3YZS1848	3YZS1860
主皮带机Main Conveyor	B800×9M	B1000×9M	B800×7.5M	B1000×9M	B650×7M	B800×7.5M
侧出皮带机（返料皮带机） Side Discharge Conveyor	B500×3M	B500×3.5M	(B800×10M)	(B1000×10M)	(B650×9.5M)	(B800×9.5M)
筛下皮带机 1 Under-screen Conveyor 1	—	—	B800×6M	B1000×6M	B650×5M	B800×6M
筛下皮带机 2 Under-screen Conveyor 2	—	—	B800×7M	B1000×7M	B800×6M	B800×7M

Sand Maker Product Introduction 制砂机产品介绍

Vertical Shaft Impact Crusher (VSI Crusher) / Sand Making Machine

立轴冲击式制砂机采用石打石或石打铁破碎原理，成砂率高、粒形优异、级配合理，适用于机制砂生产及骨料整形。

The VSI Sand Making Machine adopts rock-on-rock or rock-on-anvil crushing technology. It delivers a high sand production rate, excellent particle shape and well-graded finished products, making it ideal for manufactured sand production, aggregate shaping, mining, quarrying and construction applications.





PCX Series High-Efficiency Fine Crusher (Sand Making Machine)

PCX系列高细破碎机适用于石灰石、熟料等中等硬度物料的细碎制砂，具有破碎效率高、出料均匀、能耗低等特点。

The PCX Series High-Efficiency Fine Crusher is designed for fine crushing and sand making of limestone, clinker and other medium-hard materials. It features high crushing efficiency, uniform discharge size, low energy consumption and reliable operation for cement, mining and aggregate production.

Sand Maker Product Specifications 制砂机产品参数

立轴冲击式制砂机
Sand Making Machine / Vertical Shaft Impact Crusher (VSI Crusher)

型号	处理能力(t/h)		入料尺寸(mm)		转速(r/min)	双电机功率(kW)	外形尺寸(长X宽X高) mm	重量(t)	润滑站 Lubrication station			
	瀑落与中心进料	全中心进料	软料	硬料					双油泵电机功率(kW)	安全保护	外形尺寸 mm	油箱加热器功率(kW)
Model	Capacity (t/h)		Feed Size (mm)		Rotational Speed (r/min)	Dual Motor Power (kW)	Overall Dimensions (L×W×H) mm	Weight (t)	Dual Oil Pump Motor Power (kW)	Safety Protection	Overall Dimensions mm	Tank Heater Power (kW)
	Cascading & Center Feed	Full Center Feed	Soft Material	Hard Material								
VSI 7611	120-180	60-90	≤35	≤30	1700-1930	2X55	4100x2250x2315	8	2X0.55	双油泵一台工作一台备用，流量少自动开启备用油泵。油温高、无回油自动停机，风冷却器降低油温，冬天加热器预热油温。Dual oil pumps: one in operation, one on standby. Standby pump starts automatically when flow is low. Auto shutdown on high oil temperature or no oil return. Air cooler reduces oil temperature, heater preheats oil in winter.	1200X790X1120	2
VSI 8518	200-260	100-130	≤40	≤35	1520-1690	2X90	4160x2300x2476	12				
VSI 9526	300-380	150-190	≤45	≤40	1360-1510	2X132	4540x2500x2911	13				
VSI 1140	450-520	225-260	≤50	≤45	1180-1300	2X200	5000x2716x3117	18.5				
VSI 1145	500-640	250-360	≤50	≤45	1200-1390	2X220	5450x2900x3300	19.5				
VSI 1250	320-490	260-350	≤50	≤45	1040-1220	2X280	6200x2830x3820	23				
VSI 1263	545-583	454-486	≤60	≤50	900-1150	2X315	5700x2980x3530	19				

PCX系列高细破碎机(制砂机)PCX series high fine crusher (sand making machine)

型号	进料口尺寸（mm）	最大进料粒度（mm）	出料粒度（mm）	产量（t/h）	电机功率（kw）
Model	Feed Opening Size (mm)	Max Feed Size (mm)	Discharge Size (mm)	Capacity (t/h)	Motor Power (kW)
PCX1011	260×1100	≤80	0-15<5>70%	30-60	110
PCX1311	300×1300	≤120	0-15<5>70%	50-100	132
PCX1313	350×1300	≤150	0-15<5>70%	70-150	185
PCX1613	490×1660	≤180	0-15<5>70%	80-200	250









Banana Screen Product introduction 香蕉筛产品介绍

香蕉筛形状特殊，可以用于细粒(颗粒直径小于筛孔尺寸的一半)含量比较多的大、中粒级物料分级，也可以用在脱水、脱介、脱泥等作业中。
Banana sieve shape is special, can be used for fine grain (particle diameteris less than half of the size of the sieve) content is more large, medium grademateriał classification, can also be used in dehydration, desliming, de-slimingand other operations.

Banana Screen Product Parameters 香蕉筛产品参数

Specification & Model	Feed Particle Size (mm)	Sieve Aperture (mm)	Effective Area (m²)	Power (kW)	Amplitude (mm)	Weight (Ton)
规格型号	入料粒度（mm）	筛孔尺寸（mm）	有效面积（m²）	功率（kw）	振幅（mm）	重量（T）
ZX-1836	≤300mm	0.2-50mm	6.48	12	8-10	6
ZX-1848			6.84	18.5	8-10	7.8
ZX-2448			11.52	22	8-12	10
ZX-2461			14.64	22	8-12	11.5
ZX-3061			18.3	37	8-12	13
2ZX-3061			18.3*2	45	8-12	17
ZX-3073			21.9	45	8-12	15
2ZX-3073			21.9*2	55	8-12	18
ZX-3661			22	45	8-12	17
2ZX-3661			22*2	55	8-12	18
ZX-3673			26.28	55	8-12	20
2ZX-3673			26.28*2	72	8-12	24
ZX-4373			31.4	75	8-12	28

型号 Model	设备名称 Equipment Name	技术参数 Technical Parameters	
GNBS3661	大型香蕉筛 Large Banana Screen	规格型号 Model	GNBS3661
		筛面规格 Screen Dimension	3600mm*6100mm21.96 平方米 Square Meters
		筛面倾角 Screen Inclination	5-25°
		筛板类型 Screen Plate Type	聚氨酯筛板 Polyurethane Screen Plate
		筛板安装方式 Screen Plate Installation	卡扣式，可分段布置，网孔大小 Clip-on Type, Segmented Layout, Hole Size
		激振方式 Vibration Type	激振器 Vibrator
		润滑 Lubrication	稀油润滑 Thin Oil Lubrication
		轴承 Bearing	FAG 进口轴承 FAG Imported Bearing
		振幅（双）Amplitude (Dual)	8-12mm
		减震装置 Shock Absorber	钢簧 Steel Spring
		防腐耐磨 Corrosion & Wear Resistance	聚脲树脂喷涂或粘贴橡胶板 Polyurea Coating or Rubber Lining Plate
		连接方式 Connection Method	进口 HUCK 铆钉 Imported HUCK Rivet
		电机参数 Motor Parameters	1个电机380V, 50Hz, 30Kw 1 Motor 380V, 50Hz, 30Kw
		筛下横梁、振动梁 Under-screen Beam, Vibration Beam	去应力退火 Stress Relief Annealing
		筛孔尺寸 Screen Hole Size	0.8mm









Circular Vibrating Screen Product introduction 圆振筛产品介绍

圆振筛是一种做圆形振动、多层数、高效新型振动筛。圆振动筛采用筒体式偏心轴激振器及偏块调节振幅，物料筛淌线长，筛分规格多，具有结构可靠、激振力强、筛分效率高、振动噪音小、坚固耐用、维修方便、使用安全等特点，该振动筛广泛应用于矿山、建材、交通、能源、化工等行业的产品分级。

Circular vibrating screen is a new type of vibrating screen with circularvibration, multiple layers and high efficiency. The cylindrical vibrating screenadopts cylindrical eccentric shaft exciter and offset block to adjust the ampli-tude, the material sieve flow line is long, the screening specifications are many,with reliable structure, strong exciting force, high screening efficiency, lowvibration noise, durable, easy maintenance, safe use and other characteristics,the vibrating screen is widely used in mining, building materials, transportation,energy, chemical and other industries of product classification.

Circular Vibrating Screen Product Parameters 圆振筛产品参数

Model & Specification	Screen Layers	Sieve Aperture (mm)	Max Feed Size (mm)	Processing Capacity (m^3/h)	Motor Power (kW)	Screen Inclination Angle (°)	Total Weight (kg)	Overall Dimension (mm) (L*W*H)
2YK1225	2	4-50	400	8-60	5.5	20	3500	2930×1860×870
3YK1225	3	4-50	400	10-70	5.5	20	3850	3070×1860×1210
2YK1230	2	4-50	400	12-78	7.5	20	4200	3430×1860×870
3YK1230	3	4-50	400	13-80	7.5	20	4600	3570×1860×1210
2YK1237	2	4-50	400	15-86	7.5	20	4600	4050×1860×870
3YK1237	3	4-50	400	16-90	7.5	20	5200	4270×1860×870
2YK1535	2	5-50	400	20-125	11	20	5890	4120×2210×1230
3YK1535	3	5-50	400	21-125	11	20	6700	4360×2210×1610
2YK1545	2	5-50	400	22-150	15	20	6330	5120×2210×1230
3YK1545	3	5-50	400	22-150	15	20	6800	5360×2210×1610
4YK1545	4	5-50	400	22-155	18.5	20	7800	5930×2210×2060
2YK1548	2	5-50	400	22.5-162	15	20	6980	5420×2210×1230
3YK1548	3	5-50	400	22.5-162	15	20	7700	5660×2210×1610
4YK1548	4	5-50	400	22.5-162	18.5	20	8700	6230×2210×2060
2YK1848	2	5-80	400	25-206	15	20	9080	5420×2550×1420
3YK1848	3	5-80	400	32-276	18.5	20	9600	5660×2550×1780
4YK1848	4	5-80	400	32-285	22	20	11100	6290×2550×2160









Linear Vibrating Screen Product introduction 直线筛产品介绍

直线筛运动轨迹为直线，广泛用于矿山、需精工征集装配及无负载试车振动，煤炭、冶炼、建材、耐火材料、轻工、化工等行业中的粉状、颗粒状物料的筛选和分级。直线筛稳定可靠、消耗少、噪音低、寿命长、振型稳、筛分效率高等优点。直线筛利用振动电机激振作为振动源，使物料在筛网上被抛起，同时向前作直线运动，物料从给料机均匀地进入筛分机的进料口，通过多层筛网产生数种规格的筛上物、筛下物、分别从各自的出口排出。

The motion track of the linear vibrating screen is straight, which is widelyused in mining, requiring precision collection assembly and non-load testvibration, coal, smelting, building materials, refractories, light industry, chemi-cal industry and other industries in the screening and grading of powdery andgranular materials. Linear vibrating screen is stable and reliable, less con-sumption, low noise, long life, vibration stability, high screening efficiency.Linear vibrating screen uses vi-bration motor excitation as the vibration source,so that the material is thrown up on the screen, while moving forward in astraight line, the material from the feeder evenly into the feed port of thescreening machine, through the multi-layer screen to produce several specifi-cations of the screen on the screen, the screen under the screen, respectivelyfrom their respective exits.

Linear Vibrating Screen Product Parameters 直线筛产品参数

Technical performance and parameters of ZKR single-layer linear vibrating screen

Model	Screen Surface				Feed Size (mm)	Capacity (t/h)	Vibration Frequency (Hz)	Double Amplitude (mm)	Motor		Weight (kg)	Working Load at Each Support (N)	Maximum Dynamic Load at Each Support (N)
	Area (m^2)	Inclination Angle (°)	Aperture Size (mm)	Structure					Model	Power (kW)			
ZKR1022	2.25	-5~5	0.25~50	Woven mesh, slit mesh, punched screen, rubber screen, polyurethane screen	<250	4.5~90	16~16.33	6~9	Y132S-6	3×2	2085	818	4090
ZKR1230	3.6					7.2~144			Y132M1-	4×2	2693	1023	5115
ZKR1237	4.5					9.0~180			Y132M2-	5.5×	2948	965	4825
ZKR1437	5.25					10.5~210			Y132M2-	5.5×	3030	1225	6125
ZKR1445	6.3					12.6~252			Y160M-6	7.5×	3800	1332	6660
ZKR1637	6					12.0~240			Y132M2-	5.5×	3388	1367	6835
ZKR1645	7.2					14.4~288			Y160M-6	7.5×	4343	2425	12125
ZKR1652	8.4					16.8~336			Y160L-6	11×2	4695	2412	12060
ZKR1845	8.1					16.2~324			Y160L-6	11×2	4836	1989	9945
ZKR1852	9.45					18.9~378			Y160L-6	11×2	5122	2028	10140
ZKR2045	9					18.0~360			Y160L-6	11×2	5369	2100	10500
ZKR2052	10.5					21.0~420			Y160L-6	11×2	6176	2286	11430
ZKR2060	12					24.0~480			Y180L-6	15×2	7558	2529	12645
ZKR2445	10.8					21.6~432			Y180L-6	15×2	7037	2426	12130
ZKR2452	12.6					25.2~504			Y180L-6	15×2	7816	2579	12895
ZKR2460	14.4					28.8~576			Y180L-6	15×2	8835	2875	14375
ZKR3045	13.5					27.0~540			Y180L-6	15×2	8558	2988	14940
ZKR3052	15.7					31.4~628			Y200L2-	22×2	9931	3033	15165
ZKR3060	18					36.0~720			Y200L2-	22×2	11062	3704	18520
ZKR3645	16.2					32.4~648			Y200L2-	22×2	11789	3656	18280
ZKR3652	18.9					37.8~756			Y200L2-	22×2	12909	4321	21605
ZKR3660	21.6					43.2~864			Y200L2-	22×2	13800	4763	23815
ZKR3675	27					54.0~1080			Y225M-6	30×2	16500	5430	27150

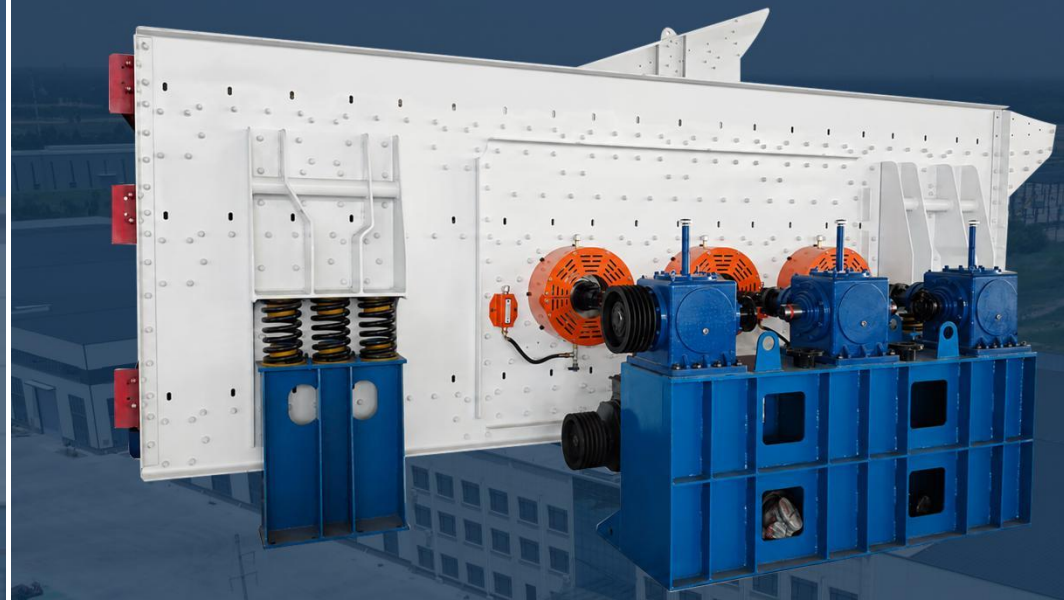







Horizontal Vibrating Screen Product introduction 水平筛产品介绍

三轴水平筛又叫0振动筛，是一种多层数新型振动筛，水平安装，占用现场空间小;透筛性好、处理能力大，筛分效率高;椭圆轨迹、振幅可调，安装高度小，可根据实际物料状况选择振动轨迹，对难筛分的物料更具优势，是矿山砂石料生产线、移动式筛分站配套设备。

The three-axis horizontal screen is also called 0° vibrating screen, whichis a

new multi-layer vibrating screen, which is installed horizontally and occu-pies a small space on the site. Good screening, large processing capacity, highscreening efficiency; Elliptical trajectory, adjustable amplitude, small installa-tion height, vi-bration trajectory can be selected according to the actual materialcondition, more advantages for difficult screening materials, is a mine, sandand stone pro-duction line, mobile screening station supporting equipment.

Horizontal Vibrating Screen Product Parameters 水平筛产品参数

Model	Number of Screen Decks	Screen Surface Specification (mm)	Maximum Feed Size (mm)	Processing Capacity (t/h)	Vibration Frequency (RPM)	Electric Power (kW)	Overall Dimensions (L×W×H) (mm)
2ZTS1550	2	1500×5000	120	75-300	13-16	18.5	5700×2240×1470
2ZTS2060	2	2000×6000	120	100-400	13-16	22	6870×2750×1470
2ZTS2260	2	2200×6000	150	110-440	13-16	30	6870×3660×1710
2ZTS2460	2	2400×6000	150	120-480	13-16	30	6870×3150×1470
3ZTS1550	3	1500×5000	120	70-270	13-16	22	5700×2240×1870
3ZTS2060	3	2000×6000	120	90-360	13-16	30	6870×2750×1870
3ZTS2260	3	2200×6000	150	100-390	13-16	37	6870×3742×2150
3ZTS2460	3	2400×6000	150	110-430	13-16	37	6870×3150×1870
4ZTS2060	4	2000×6000	150	100-400	13-16	37	6870×3700×2666









Dewatering Screen Product introduction 脱水筛产品介绍

脱水筛，主要作用是脱水、脱泥、脱介，可用于砂石料厂水洗砂、选煤厂煤泥回收、选矿厂尾矿干排等，因此也叫砂石脱水筛、矿用脱水筛、煤泥脱水筛、尾矿脱水筛等。尾矿脱水筛也叫尾矿干排筛，除了具有普通脱水筛的各种优良性能及作用外，尾矿干排筛多配合浓密机进行尾矿干排，是当下最好的脱水筛及尾矿干排设备。

Dewatering screen, the main function is dewatering, desliming, desliming,can be used for sand and stone plant washing sand, coal preparation plantslime recovery, concentrator tailings dry discharge, so it is also called sandand stone dewatering screen, mine dewatering screen, coal slime dewateringscreen, tailings dewatering screen and so on.

Tailings dewatering screen is also called tailings dry discharge screen, inaddition to the various excellent properties and effects of ordinary dewateringscreen, tailings dry discharge screen with thickener for tailings dry discharge,is the best dewatering screen and tailings dry discharge equipment.

Dewatering Screen Product Parameters 脱水筛产品参数

型号	筛面尺寸	功率（kW）	处理能力（t/h）	进料粒度（mm）	重量（kg）	外形尺寸（mm）
Model	Screen Size (mm)	Power (kW)	Capacity (t/h)	Feed Size (mm)	Weight (kg)	Overall Dimensions
TS0918	900*1800	0.75kw-6级	10-20	≤10	1600	1885×1290×1024
TS0924	900*2400	0.75×2	10-20	≤10	2000	2485×1290×1224
TS1224	1200*2400	1.5×2	30-50	≤10	2300	2485×1590×1324
TS1230	1200*3000	2.2×2	30-50	≤10	2530	3085×1590×1424
TS1236	1200*3600	2.2×2	30-50	≤10	2880	3685×1590×1524
TS1530	1500*3000	3.0kw-6级	50-80	≤10	3180	3083×1890×1421
TS1536	1500*3600	3×2	50-80	≤10	3300	3683×1890×1601
TS1836	1800*3600	3.0kw-6级	100-150	≤10	3750	3715×2466×1855
TS1842	1800*4200	4×2	100-150	≤10	4380	4315×2466×1855
TS1845	1800*4500	4×2	100-150	≤10	4680	4515×2446×2135
TS1848	1800*4800	6.5×2	100-150	≤10	4960	4915×2466×2244
TS2040	2000*4000					
TS2442	2400*4200	7.5×2	130-180	≤10	5130	4315×3085×2042
TS2445	2400*4500	7.5×2	130-180	≤10	5450	4615×3085×2140
TS2448	2400*4800	7.2×2	130-180	≤10	5880	4915×3085×2242
TS2450	2400*5000					

Feeder Product Introduction 给料机产品介绍

ZW Series Linear Feeder

ZW系列直线给料机采用直线振动输送方式，可将块状、颗粒状物料均匀连续送入破碎设备，具有运行平稳、结构紧凑、维护方便及给料量可调等特点。

The ZW Series Linear Feeder delivers bulk and granular materials uniformly and continuously to crushing equipment. Featuring stable operation, compact construction, adjustable feeding capacity, low energy consumption, and easy maintenance, it is widely used in mining, aggregate, metallurgy, and building material production lines.





ZD Series Vibrating Feeder

ZD系列振动给料机利用振动原理实现物料均匀连续输送，可有效控制给料速度，减少设备堵塞，具有承载能力强、运行可靠、能耗低和适应性广等优势。

The ZD Series Vibrating Feeder uses vibration to convey materials evenly and continuously. It effectively controls the feeding rate and reduces material blockage. With high loading capacity, reliable performance, low energy consumption, and wide adaptability, it is ideal for mining and crushing applications.

Chain Plate Feeder

链板给料机采用高强度链条和耐磨链板输送物料，适用于大块、重载及高冲击物料的连续给料，具有结构坚固、承载能力大、运行稳定和使用寿命长等特点。

The Apron Feeder uses heavy-duty chains and wear-resistant steel plates to convey large, heavy, and highly abrasive materials. Its robust construction, high loading capacity, stable operation, adjustable feeding speed, and long service life make it suitable for mines, quarries, and crushing plants.



Feeder Product Specifications 给料机产品参数

ZD系列震动给料机 ZD series vibrating feeder

型号	进料粒度（mm）	处理能力（t/h）	功率（kw）	料箱尺寸（宽×长 mm）
Model	Feed Size (mm)	Capacity (t/h)	Power (kW)	Hopper Size (W × L mm)
ZD1036	<500	60-80	3kw × 2	1000×3600
ZD1136	<550	80-120	4kw × 2	1100×3600
ZD1340	<600	100-160	4kw × 2	1300×4000
ZD1545	<680	150-200	5.5kw × 2	1500×4500
ZD1745	<700	200-300	7.5kw × 2	1700×4500
ZD1950	<750	260-350	9kw × 2	1900×5000
ZD2060	<800	400-500	11kw × 2	2000×6000
ZD2460	<1000	600-800	12kw × 2	2400×6000

ZW系列直线给料机 ZW series linear feeder

型号	进料粒度（mm）	处理能力（t/h）	功率（kw）	料箱尺寸（宽×长 mm）
Model	Feed Size (mm)	Capacity (t/h)	Power (kW)	Hopper Size (W × L mm)
ZW1032	<500	60-80	15	1000×3200
ZW1234	<600	80-120	18.5	1200×3400
ZW1340	<650	100-150	18.5	1300×4000
ZW1542	<680	150-200	22	1500×4200
ZW1742	<700	200-300	30	1700×4200
ZW1945	<750	260-360	37	1900×4500

Sand Washer Product Introduction 洗砂机产品介绍



Wheel Sand Washing Machine

轮式洗砂机用于清洗砂石中的泥土与杂质，具有结构简单、运行稳定、处理量大、砂料流失少和维护方便等特点，适用于砂石骨料生产线。

The Wheel Sand Washing Machine removes soil and impurities from sand and aggregates. It features stable operation, high capacity, low sand loss, simple maintenance, and efficient cleaning, making it ideal for aggregate plants, quarries, and construction sand production lines.



Spiral Sand Washer

螺旋洗砂机通过螺旋叶片对砂石进行搅拌、清洗和分级，可有效去除泥土及杂质，具有清洗能力强、处理量大、运行可靠和适应性广等优势。

The Spiral Sand Washer uses rotating spiral blades to wash, stir, and classify sand materials. It efficiently removes clay and impurities while providing high processing capacity, reliable operation, excellent cleaning performance, and wide adaptability for mining and aggregate applications.

Sand Washer Product Specifications 洗砂机产品参数

轮式洗砂机 Wheel Sand Washer

水轮型号	轮斗直径	轮斗宽度	轮排数量	重量	最大进料粒度	处理量	轮斗转速	电机功率	减速机	外形尺寸
Model	Wheel Diameter (mm)	Wheel Width(mm)	Number of wheels	Weight (kg)	Max Feed Size (mm)	Capacity (t/h)	Wheel Speed (r/min)	Motor Power(kW)	Reducer	Overall Dimension L×W×H (mm)
1226	2200	1200	2	1800	≤10	20-40	1-3	7.5kW-4级	500/250	2600×1800×2300
1828	2800	1800	3	3200	≤10	40-80	1-3	15kW-4级	500/250	2800×2200×2600
2030	3000	2000	3	4200	≤10	60-100	1-3	15kW-4级	500/250	3000×2400×2700
2430	3000	2400	4	4800	≤10	80-120	1-3	15kW-4级×1	650/350	3200×2600×2800
2432	3200	2400	4	5200	≤10	100-150	1-3	18.5kW-4级	650/350	3400×2700×3000
2435	3500	2400	4	5800	≤10	120-180	1-3	22kW-4级	650/350	3600×2800×3200
2732	3200	2700	4/5	5800	≤10	100-160	1-3	22kW-4级	650/350	3600×2800×3100
3030	3000	3000	5	4800	≤10	80-130	1-3	18.5kW-4级	750/350	3600×3000×3000
3035	3500	3000	5	6500	≤10	120-200	1-3	18.5kW-4级	750/350	3800×3200×3300
3050	5000	3000	5	13275	≤10	180-300	1-2.5	37kW	1000×650	5200×3600×4200
3045分体式 Split Type	4500	3000	5	11085	≤10	160-260	1-2.5	37kW	1000×400	5000×3500×4000
3050 五排5-Row	5000	3000	5	13440	≤10	200-320	1-2.5	37kW	1000×650	5300×3800×4200

螺旋式洗砂机 Spiral Sand Washer

型号	螺旋直径 (mm)	水槽长度 (mm)	螺旋转速 (r/min)	处理能力 (t/h)		电动机功率 (kw)		外形尺寸 (LxWxH) (mm)			总重量
				按返砂	按溢流	传动用	升降用	长	宽	高	
Model	Screw Diameter (mm)	Trough Length (mm)	Screw Speed (r/min)	Processing Capacity (t/h)		Motor Power (kW)		Overall Dimensions (L×W×H) (mm)			Total Weight
				Sand Return	Overflow	Transmission	Lifting	Length	Width	Height	
FG-3	300	3000	12-30	80-150	20	1.1	——	3850	490	1140	0.7
FG-5	500	4500	8-12.5	135-210	32	1.1	——	5430	680	1480	1.9
FG-7	750	5500	6-10	340-570	65	3	——	6720	980	1820	3.1
FG-10	1000	6500	5-8	675-1080	110	5.5	——	7590	1240	2380	4.9
FC-10		8400		675-1080	85	7.5	——	9600	1240	2680	6.2
FG-12	1200	6500	4-6	1170-1870	155	7.5	2.2	8180	1570	3110	8.5
FC-12		8400		1170-1870	120	7.5	2.2	10370	1540	3920	11
2FG-12		6500		2340-3740	310	15	4.4	8230	2790	3110	15.8
2FC-12		8400		2340-3740	240	15	4.4	10370	2790	3920	17.6
FG-15	1500	8300	4-6	1830-2740	235	7.5	2.2	10410	1880	4080	12.5
FC-15		10500		1830-2740	185	7.5	2.2	12670	1820	4890	16.8
2FG-15		8300		2280-5480	470	15	4.4	10410	3390	4080	22.1
2FC-15		10500		2280-5480	370	15	4.4	12670	3370	4890	30.7
FG-20	2000	8400	3.6-5.5	3290-5940	400	11-15	3	10790	2530	4490	20.5
FC-20		12900		3210-5940	320	11-15	3	15610	2530	5340	28.5
2FG-20		8400		7780-11880	800	22-30	6	11000	4600	4490	35.5
2FC-20		12900		7780-11880	640	22-30	6	15760	4600	5640	48.7
FG-24	2400	9130	3.67	6800	580	15	3	11650	2910	4970	26.8
FC-24		14130		6800	490	18.5	4	16580	2930	7190	41
2FG-24		9130		13600	1160	30	6	12710	5430	5690	45.8
2FC-24		14130		13700	910	37	8	17710	5430	8000	67.9
2FG-30	3000	12500	3.2	23300	1785	40	8	16020	6640	6350	73
2FC-30		14300		23300	1410	——	——	17091	——	8680	84.8









belt conveyor Product introduction 皮带机产品介绍

皮带输送机适用于矿山、砂石、建材等行业，可连续输送各类散状物料。设备运行平稳、输送能力强、能耗低、维护方便，可根据现场需求定制长度、宽度及输送角度。

The belt conveyor is designed for continuous material handling in mining,

aggregates, and construction industries. It features stable operation, high conveying capacity, low energy consumption, and easy maintenance. Belt width, conveyor length, and conveying angle can be customized.

belt conveyor Product Specifications 皮带机产品参数

输送带宽度 Belt Width	500－1600 mm
输送机长度 Conveyor Length	5－200 m，可定制 / Customizable
输送能力 Conveying Capacity	30－2000 t/h
带速 Belt Speed	0.8－4.0 m/s
最大进料粒度 Max. Feed Size	50－500 mm
输送倾角 Conveying Inclination	0°－20°
电机功率 Motor Power	5.5－315 kW
驱动方式 Drive Type	电动滚筒或减速电机 / Motorized Pulley or Geared Motor
输送带材质 Belt Material	EP橡胶输送带 / EP Rubber Conveyor Belt
输送带层数 Belt Plies	3－6层 / 3－6 Plies
托辊直径 Idler Diameter	89－159 mm
滚筒直径 Pulley Diameter	320－1000 mm
张紧方式 Tensioning Type	螺旋式、重锤式或液压式 / Screw, Gravity or Hydraulic Tensioning
安装形式 Installation Type	固定式或移动式 / Fixed or Mobile
机架材质 Frame Material	碳钢型材 / Carbon Steel Structure
电源 Power Supply	380 V / 50 Hz / 3相，可定制 / 3 Phase, Customizable
防护等级 Protection Grade	IP54 / IP55
控制方式 Control Mode	就地控制或PLC集中控制 / Local Control or Centralized PLC Control



Polyurethane Screen Mesh Product introduction
聚氨酯筛网产品介绍

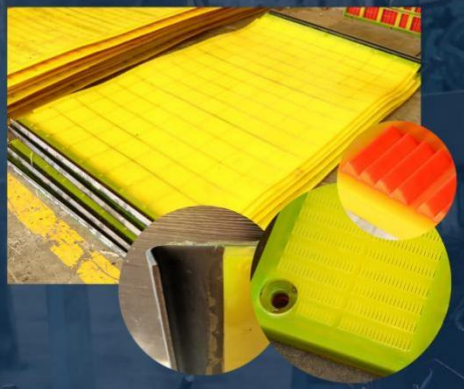

Polyurethane Screen Mesh
聚氨酯弹性筛板以钢丝绳为骨架，弹性模量高、承载力大、耐磨抗冲击、拉伸强度优异，使用寿命长久，属耐磨性能顶尖的筛面材料。Polyurethane elastic screen plates adopt steel wire ropes as skeletons. Featuring large bearing capacity, high elasticity modulus, excellent shock resistance, wear resistance and tensile strength, they enjoy long service life and rank among the top wear-resistant screening surfaces.

Fine Screen Mesh
适用于高频细筛、高频叠层振动筛，可尾矿脱水分级、铁精粉筛分。柔性聚氨酯筛网为高分子弹性体，强度、弹性、耐磨性优异。Suitable for high-frequency fine screens and laminated vibrating screens for tailings dewatering and iron ore concentrate classification. Flexible polyurethane screen mesh, a polymer elastomer, boasts high strength, elasticity and wear resistance.





Rod Screen Mesh
由多条内置钢丝的聚氨酯棒条粘合而成，兼顾高弹性与高硬度，不易粘料；棒条上小下大呈锥形，筛分极限物料时可有效防堵孔。 It consists of bonded polyurethane rods embedded with steel wires, featuring high elasticity and hardness against material adhesion. Its tapered structure prevents blocking when screening extreme materials.



Flip-Flow Screen Mesh

弛张筛网由高弹性聚氨酯制成，依靠周期性张弛高效筛分，耐磨低噪、防堵耐用，适合湿粘细粒等难筛分物料。

The flip-flow screen mesh is made of highly elastic polyurethane. It achieves efficient screening through periodic stretching and relaxation. Featuring wear resistance, low noise, anti-clogging performance and long service life, it is suitable for difficult-to-screen materials such as wet, sticky and fine-grained materials.

Steel Wire Screen Mesh Product introduction
钢丝筛网产品介绍

Woven Screen Mesh

采用高强度锰钢丝编织而成，耐磨性强、韧性好、筛孔均匀，适用于矿石、砂石、煤炭等物料的分级筛分。

Made of high-strength manganese steel wire, this woven screen mesh offers excellent wear resistance, toughness, and uniform openings for screening ore, aggregates, and coal.

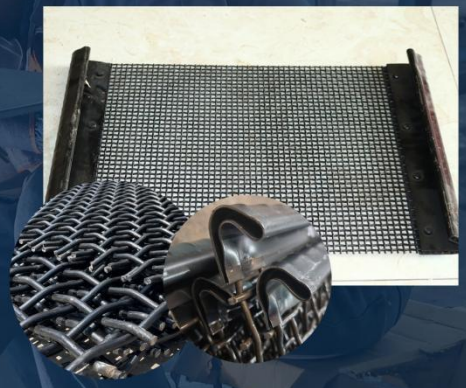



Welded Screen Mesh

采用优质锰钢丝焊接成型，结构牢固、抗冲击能力强、使用寿命长，适合大型矿山、砂石及建筑材料筛分作业。

Manufactured from premium manganese steel wire, this welded screen mesh features a strong structure, high impact resistance, and long service life for mining and aggregate screening.



High Manganese Steel Anti-Clogging Screen

采用优质高锰钢制造，具有防堵、自清洁、耐腐蚀和筛分效率高等特点，适用于湿料、黏性物料及精细筛分。

Manufactured from premium high manganese steel, it features anti-clogging, self-cleaning, corrosion resistance and high screening efficiency. Suitable for wet materials, sticky materials and fine screening operations.

Rubber Screen Mesh Product introduction
橡胶筛网产品介绍

Rubber Screen Mesh

橡胶筛网具有良好的弹性、耐磨性和抗冲击性能，可有效降低噪音，适用于矿石、砂石、煤炭等物料的筛分。

Rubber Screen Mesh offers excellent elasticity, wear resistance, and impact absorption. It reduces noise and is ideal for screening ores, aggregates, coal, and other materials.



Screen Mesh Product Specifications 筛网产品参数

聚氨酯筛网 Polyurethane Screen Mesh

方子孔 Square pit	孔径aperture	4mm-11mm	12mm-29mm	30mm-59mm	60mm-100mm	100mm以上	/
	厚度范围	21mm-25mm	25mm-30mm	30mm-40mm	40mm-50mm	50mm-60mm	/
圆孔 Circular hole	孔径aperture	3mm-15mm	16mm-30mm	31mm-50mm	50mm-70mm	70mm以上	/
	厚度范围	21mm-25mm	25mm-30mm	30mm-35mm	35mm-45mm	40mm-60mm	/
矩形孔 Rectangular hole	孔径aperture	5mm×9mm	7mm×10mm	10mm×20mm	20mmx35mm	30mmx50mm	40mmx50mm
	厚度范围	21mm-25mm	21mm-25mm	30mm-45mm	30mm-45mm	35mm-50mm	40mm-55mm

高频精细筛网Fine Screen Mesh

目数 (mesh)	微米 (μm)	目数 (mesh)	微米 (μm)
2	8000	100	150
3	6700	115	125
4	4750	120	120
5	4000	125	115
6	3350	130	113
7	2800	140	109
8	2360	150	106
10	1700	160	96
12	1400	170	90
14	1180	175	86
16	1000	180	80
18	880	200	75
20	830	230	62
24	700	240	61
28	600	250	58
30	550	270	53
32	500	300	48
35	425	325	45
40	380	400	38
42	355	500	25
45	325	600	23
48	300	800	18
50	270	1000	13
60	250	1340	10
65	230	2000	6.5
70	212	5000	2.6
80	180	8000	1.6
90	160	10000	1.3

钢丝筛网Steel Wire Screen Mesh & 棒条筛网Bar Screen Mesh

目数	丝径 (mm)	孔径 (mm)	过滤面积 %
2	1.6	11.1	76
3	1.6	6.87	66
4	1.6	4.75	56
5	1	4.08	64
6	0.9	3.33	62
8	0.9	2.28	51
8	0.7	2.47	61
10	0.5	2.04	64
12	0.5	1.62	59
14	0.5	0.5	52
16	0.35	1.24	61
18	0.28	1.13	64
20	0.35	0.92	52
24	0.35	0.71	45
28	0.35	0.56	38
30	0.28	0.57	45
40	0.22	0.42	43
80	0.13	0.187	35
100/90	0.1	0.167	39
100	0.1	0.154	37
100	0.11	0.144	32
120	0.09	0.122	53
120	0.08	0.132	39
150	0.066	0.104	38
200	0.05	0.077	37
200	0.04	0.084	47
250	0.04	0.062	37
250	0.035	0.067	43
250	0.08	0.072	50
300	0.04	0.045	28
300	0.06	0.065	42
825	0.035	0.043	30
325	0.028	0.06	41
400	0.5	0.084	28

Crusher Parts破碎机配件






















Belt Conveyor Parts 皮带机配件












干法砂石骨料生产线案例 EPC case













TOP 1 PU网中国厂家
TOP 1 PU Screen Mesh Manufacturer in China
一站式砂石骨料生产线EPC专家
One-Stop EPC Expert for Sand and Gravel Aggregate Production Lines
THANK YOU!
CONTACT US
Email: info@tfindustry.com
Website:www.tfindustry.com