追求卓越 勇于探索

www.hndl.net.cn

河南大林橡胶通信器材有限公司

HENAN DALIN RUBBER AND TELECOMMUNICATIONS APPARATUS CO.,LTD

厂区地址 Address：河南省辉县市东环路1号 / 1 Donghuan Road, Huixian City, Henan

邮编编码 Postal Code：453600　　联系电话 Tel：0373-6221838 6221829

传真电话 Fax：0373-6292496　　电子信箱 Email：dlywb@hndl.net.cn

DALIN 河南大林

气动离合器

PNEUMATIC CLUTCH











企业简介

河南大林橡胶通信器材有限公司是一个专注于各种气动离合器设计制造及配件加工的生产企业。

产品应用于矿山、冶金、石油、钢铁、化工、水泥、船舶、造纸、通用机械等各种大功率机械传动或制动装置。

公司先后通过了国家高新技术企业认证、国家知识产权管理体系认证、ISO9001：2008国际质量体系认证、OHSAS18001：2007职业健康安全管理体系认证、ISO14001：2004环境管理体系认证，并荣获河南省创新型试点企业、小巨人企业、河南省橡胶气囊工程技术研究中心等荣誉称号，还获得多项国家专利及省部级科技进步奖。产品畅销全国各地，并出口到美国、俄罗斯、中东、东南亚等。

COMPANY INTRODUCTION

Henan Dalin Rubber And Telecommunications Apparatus Co.,Ltd specializes in designing and manufacturing for all kinds of pneumatic clutch and its accessories.

Our products are mainly used on driving or braking devices for kinds of high-power mechanical transmission like mine, metallurgy, oil, steel, chemical industry, cement, vessel，papermaking, universal mechanical, etc.

Our company successively acquired National High and New Technology Enterprise Authentication, National Intellectual Property Management System Certification，passed ISO9001:2008 International Quality System Authentication, OHSAS18001:2007 Occupational Health and Safety Management System Authentication, ISO14001:2004 Environmental Management System Authentication，won the honorary title of Henan innovative pilot enterprise, small giant enterprise, Henan rubber balloon engineering technology research center and more than 20 national patents and provincial award for science and technology advancement. Our products are sold well inland, and exported to America, Russia, the Middle East, Southeast Asia and many other countries.

•国家高新技术企业•
National High-Tech Enterprise
DALIN 河南大林

资质荣誉 Credentials and honors











1 水冷式制动器
Water Cooled Brakes



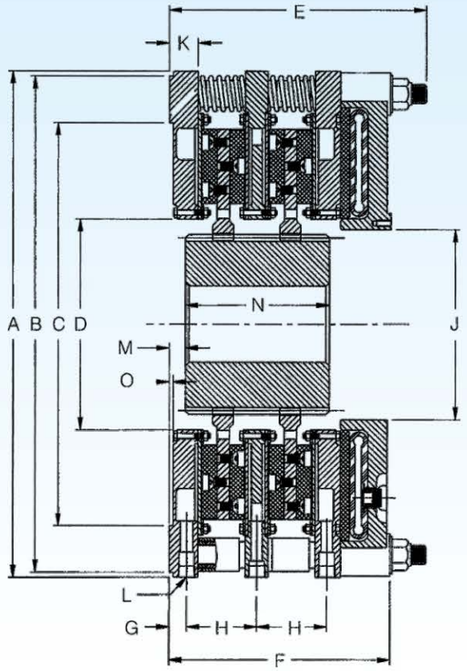

WCB规格参数 WCB Specifications

型号 Size	额定扭矩 Torque Ratings @100 psi (lb-in)/7 bar (Nm)								气体容积/结合时 Air Volume/Engagement				最高滑动转速 Max Slip Speed	最高空载转速 Max Dis-engaged Speed	重量和转动惯量 WEIGHT AND INERTIA			型号 Size
	标准 Standard Friction Material		高摩擦系数 High Coeff Friction Material		散热能力 Heat Dissipation Capacity		水流量（最小值） Water Flow (Minimum)		新 New		旧 Worm				总重量 Total Weight	齿毂和驱动盘重量 Hub & DP Weight	齿毂和驱动盘转动惯量 Hub & DP Inertia	
	lb-in	Nm	lb-in	Nm	Hp	Kw	gpm	L/min	in³	L	in³	L	rpm	rpm	lb(Kg)	lb(Kg)	lbft² (wr²) (kgm² (J))	
118	44900	5150	67100	7700	120	89.5	12	45.4	59	1.0	122	2	850	1560	331(150)	86(39)	18.8(0.79)	118
218	89800	10310	134200	15400	240	179	24	90.8	69	1.1	122	2	850	1560	460(209)	172(78)	38.1(1.61)	218
318	134700	15460	201300	23100	360	268.5	36	136.3	78	1.3	122	2	850	1560	848(385)	272(123)	57.4(2.42)	318
418	179600	20620	268400	30810	480	357.9	48	181.7	88	1.4	122	2	850	1560	1236(561)	372(169)	78.1(3.29)	418
124	111600	12800	166700	19130	270	201.3	27	102.2	170	2.8	299	4.9	640	1170	810(367)	196(89)	71.9(3.03)	124
224	223200	25600	333400	38260	540	402.7	54	204.4	190	3.1	299	4.9	640	1170	1208(548)	428(194)	148(6.21)	224
324	334800	38400	500100	57380	810	604	81	306.6	209	3.4	299	4.9	640	1170	1624(737)	631(286)	219(9.21)	324
424	446400	51200	666700	76510	1080	805.4	108	408.8	228	3.7	299	4.9	640	1170	1950(884)	850(386)	294(12.4)	424
136	375500	43080	561200	64380	650	484.7	65	246.1	271	4.4	661	10.8	425	775	2687(1219)	474(215)	374(15.8)	136
236	751000	86160	1122400	128750	1300	969.4	130	492.1	313	5.1	661	10.8	425	775	3919(1777)	908(412)	704(29.7)	236
336	1126500	129250	1683600	193130	1950	1 454	195	738.2	355	5.8	661	10.8	425	775	5400(2449)	1345(610)	1107(46.6)	336
436	1502000	172330	2244800	257500	2600	1939	260	984.2	396	6.5	661	10.8	425	775	6501(2948)	1997(906)	1524(64.2)	436

额定扭矩由气压决定，且制动扭矩的大小与气压成正比。
Torque rating is dependent on air pressure applied.Brake torque is directly proportional to the air pressure applied.
Maximum allowable air pressure is 130 psi(9 bar)

WCB尺寸数据 WCB Dimensions Inches (mm)

型号 Size	A	B	C	D	E	F	G	H	J	K	冷却液入口/出口 L COOLANT INLETS/ OUTLETS		M	N	O	P进气口 AIR INLETS			Q	R			安装孔S			齿毂内孔范围 BORE RANGE		型号 Size
		+.000/-.003 (+.00/-.08)	+.003/-.000 (+.08/-.00)								数量 QTY	螺纹规格 SIZE(NPT)				数量 QTY	螺纹规格 SIZE (NPT)	分布圆直径 HOLE CENTER		数量 QTY	型号SIZE (NPT)	圆直径 BOLT CIRCLE	数量 QTY²	型号 SIZE	分布圆直径 BOLT CIRCLE	最小 MIN	最大 MAX³	
118	23 5/8 (600.1)	23.250(590.55)	18.250(463.55)	11(279.4)	9 47/64(247.3)	7 1/4 (184.2)	7/8 (22.2)	3 7/32(81.8)	8 1/2(215.9)	1 1/2(38.1)	4	1/2−14	1 1/4 (31.8)	2 13/16(71.4)	1/4 (6.4)	2	1/2−14	14.188 (360.36)	25°	3	3/8−16	9.125(231.78)	10	21/32 (16.7)	22.000 (558.8)	2 1/4 (57.2)	5 11/32(135.7)	118
218	23 5/8(600.1)	23.250(590.55)	18.250(463.55)	11(279.4)	13 5/32(334.2)	10 19/32(269.1)	7/8 (22.2)	3 7/32(81.8)	8 1/2(215.9)	1 1/2(38.1)	8	1/2−14	1 1/4 (31.8)	5 5/8(142.9)	1/4 (6.4)	2	1/2−14	14.188 (360.36)	25°	3	3/8−16	9.125(231.78)	10	21/32(16.7)	22.000(558.8)	2 1/4 (57.2)	5 11/32 (135.7)	218
318	23 5/8(600.1)	23.250(590.55)	18.250(463.55)	11(279.4)	17 1/4(438.2)	13 15/16 (354.0)	7/8 (22.2)	3 7/32(81.8)	8 1/2(215.9)	1 1/2(38.1)	12	1/2−14	1 1/4 (31.8)	9 5/8(244.5)	1/4 (6.4)	2	1/2−14	14.188 (360.36)	25°	3	3/8−16	9.125(231.78)	10	21/32 (16.7)	22.000(558.8)	2 1/4 (57.2)	5 11/32 (135.7)	318
418	23 5/8(600.1)	23.250(590.55)	18.250(463.55)	11(279.4)	21 1/2(546.1)	17 9/32 (438.9)	7/8 (22.2)	3 7/32(81.8)	8 1/2(215.9)	1 1/2(38.1)	16	1/2−14	1 1/4 (31.8)	12 1/2(317.5)	1/4(6.4)	2	1/2−14	14.188 (360.36)	25°	3	3/8−16	9.125(231.78)	10	21/32(16.7)	22.000 (558.8)	2 1/4(57.2)	5 11/32 (135.7)	418
124	30 5/8(777.9)	29.998(761.95)	24.375(619.13)	12 3/4(323.9)	11(279.4)	9 17/64 (235.3)	1 1/16 (27.0)	4 1/8(104.8)	11 1/2(292.1)	1 3/4(44.5)	4	3/4−14	1 3/8 (34.9)	3 1/2(88.9)	1/4(6.4)	2	1/2−14	18.500 (469.90)	24°	6	3/8−16	12.250(311.15)	10	21/32 (16.7)	28.750(730.25)	2 3/4(69.9)	7 (177.8)	124
224	30 5/8(777.9)	29.998(761.95)	24.375(619.13)	12 3/4(323.9)	15 1/2(393.7)	13 5/16 (338.1)	1 1/16 (27.0)	4 1/8(104.8)	11 1/2(292.1)	1 3/4(44.5)	8	3/4−14	1 3/8 (34.9)	8 5/8(219.1)	1/4 (6.4)	2	1/2−14	18.500 (469.90)	24°	6	3/8−16	12.250(311.15)	10	21/32(16.7)	28.750(730.25)	2 3/4(69.9)	7 (177.8)	224
324	30 5/8(777.9)	29.998(761.95)	24.375(619.13)	12 3/4(323.9)	24(609.6)	17 11/32 (440.5)	1 1/16 (27.0)	4 1/8(104.8)	11 1/2(292.1)	1 3/4(44.5)	12	3/4−14	1 3/8 (34.9)	13 3/16(335.0)	1/4(6.4)	2	1/2−14	18.500 (469.90)	24°	6	3/8−16	12.250 (311.15)	10	21/32 (16.7)	28.750(730.25)	2 3/4(69.9)	7 (177.8)	324
424	30 5/8(777.9)	29.998(761.95)	24.375(619.13)	12 3/4(323.9)	30 1/2(774.7)	21 7/16 (544.5)	1 1/16 (27.0)	41/8(104.8)	11 1/2(292.1)	1 3/4(44.5)	16	3/4−14	1 3/8 (34.9)	16 15/16(430.2)	1/4(6.4)	2	1/2−14	18.500 (469.90)	24°	6	3/8−16	12.250(311.15)	10	21/32(16.7)	28.750(730.25)	2 3/4(69.9)	7 (177.8)	424
136	44 55/64(1139.4)	44.498(1130.25)	18.375(466.73)	16 1/2(419.1)	17(431.8)	12 1/16 (306.4)	1 17/32 (38.9)	4 31/32(126.2)	16 1/2(419.1)	2 19/32(65.9)	4	1−1/4−11 1/2	2 3/8 (60.3)	5(127.0)	9/32(7.1)	3	1/2−14	28.000(711.20)	18.75°	6	1/2−13	17.500(444.50)	14	1 1/16 (27.0)	42.000(1066.80)	4 (101.6)	10 1/8(257.2)	136
236	44 55/64(1139.4)	44.498(1130.25)	18.375(466.73)	16 1/2(419.1)	20 3/4(527.1)	17 1/32 (432.6)	1 17/32 (38.9)	4 31/32(126.2)	16 1/2(419.1)	2 19/32(65.9)	8	1−1/4−11 1/2	2 3/8(60.3)	9(228.6)	9/32 (7.1)	3	1/2−14	28.000 (711.20)	18.75°	6	1/2−13	17.500 (444.50)	14	1 1/16(27.0)	42.000(1066.80)	4 (101.6)	10 1/8(257.2)	236
336	44 55/64(1139.4)	44.498(1130.25)	18.375(466.73)	16 1/2(419.1)	27 1/2(698.5)	22 (558.8)	1 17/32 (38.9)	4 31/32(126.2)	16 1/2(419.1)	2 19/32(65.9)	12	1−1/4−11 1/2	2 3/8 (60.3)	13(330.2)	9/32(7.1)	3	1/2−14	28.000 (711.20)	18.75°	6	1/2−13	17.500(444.50)	14	1 1/16 (27.0)	42.000 (1066.80)	4 (101.6)	10 1/8(257.2)	336
436	44 55/64(1139.4)	44.498(1130.25)	18.375(466.73)	16 1/2(419.1)	35(889.0)	26 31/32 (685.0)	1 17/32 (38.9)	4 31/32(126.2)	16 1/2(419.1)	2 19/32(65.9)	16	1−1/4−11 1/2	2 3/8(60.3)	18 (457.2)	9/32(7.1)	3	1/2−14	28.000 (711.20)	18.75°	6	1/2−13	17.500(444.50)	14	1 1/16 (27.0)	42.000(1066.80)	4 (101.6)	10 1/8 (257.2)	436

国家高新技术企业 National High-Tech Enterprise DALIN 河南大林

2 常规式离合器 Power Grip Clutches

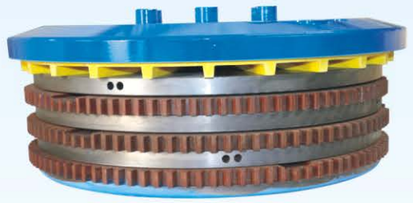



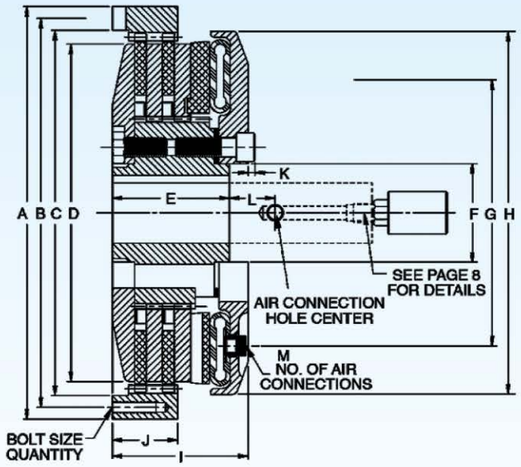

Quick Change Driving Adapter

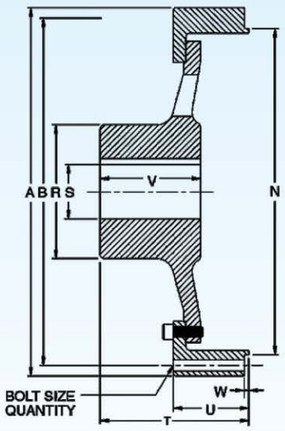

Standard Driving Adapter

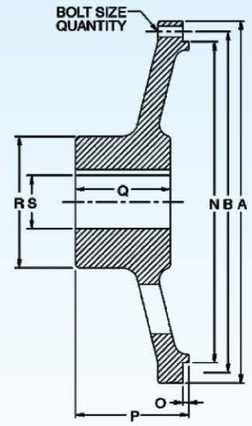

尺寸数据 Dimensions Inches (mm)

型号 Size	A	B	螺栓尺寸 Bolt Size	QTY	C +.003/−.000 (+.076/−.000)D	D	E	F	G	H	I	J	K	L	M 数量 QTY	N +.000/−.003 (+.000/−.076)	O	P	Q	R	S 最小 Min*	S 最大 Max*	T	U	W	V	型号 Size
108	10 3/8 (263.53)	9.625 (244.48)	1/2−13	6	8.872 (225.35)	8 (203.21)	2 3/4 (69.85)	1 61/64 (49.53)	6 5/8 (168.28)	9 5/8 (244.48)	3 7/8 (98.43)	1 3/8 (34.93)	9/32 (7.14)	2 1/4 (57.15)	2	8.872 (225.35)	1/8 (3.18)	3 1/8 (79.38)	3 (76.20)	3 3/4 (95.25)	15/16 (23.81)	2 5/8 (66.68)	–	–	–	–	108
208	10 3/8 (263.53)	9.625 (244.48)	1/2−13	6	8.872 (225.35)	8 (203.21)	4 1/8 (104.75)	1 61/64 (49.53)	6 5/8 (168.28)	9 5/8 (244.48)	5 1/4 (133.35)	2 3/4 (69.85)	9/32 (7.14)	2 1/4 (57.15)	2	8.872 (225.35)	1/8 (3.18)	3 1/8 (79.38)	3 (76.20)	3 3/4 (95.25)	15/16 (23.81)	2 5/8 (66.68)	–	–	–	–	208
308	10 3/8 (263.53)	9.625 (244.48)	1/2−13	6	8.872 (225.35)	8 (203.21)	5 1/2 (139.70)	1 61/64 (49.53)	6 5/8 (168.28)	9 5/8 (244.48)	6 5/8 (168.28)	4 1/8 (104.78)	9/32 (7.14)	2 1/4 (57.15)	2	8.872 (225.35)	1/8 (3.18)	3 1/8 (79.38)	3 (76.20)	3 3/4 (95.25)	15/16 (23.81)	2 5/8 (66.68)	–	–	–	–	308
111	14 3/8 (365.13)	13 3/8 (339.73)	5/8−11	8	12.375 (314.33)	11 (279.4)	3 (76.20)	3 1/64 (76.60)	8 1/2 (215.90)	11 15/16 (303.21)	4 1/8 (104.78)	1 1/2 (38.10)	7/16 (11.11)	2 1/2 (63.50)	2	12.374 (314.30)	1/8 (3.18)	3 5/8 (92.08)	3 1/4 (82.55)	6 1/4 (158.75)	1 3/8 (34.93)	4 7/16 (111.13)	–	–	–	–	111
211	14 3/8 (365.13)	13 3/8 (339.73)	5/8−11	8	12.375 (314.33)	11 (279.4)	4 1/4 (107.95)	3 1/64 (76.60)	8 1/2 (215.90)	11 15/16 (303.21)	5 3/8 (136.53)	2 7/8 (73.03)	7/16 (11.11)	2 1/2 (63.50)	2	12.374 (314.30)	1/8 (3.18)	3 5/8 (92.08)	3 1/4 (82.55)	6 1/4 (158.75)	1 3/8 (34.93)	4 7/16 (111.13)	–	–	–	–	211
311	14 3/8 (365.13)	13 3/8 (339.73)	5/8−11	8	12.375 (314.33)	11 (279.4)	5 9/16 (141.29)	3 1/64 (76.60)	8 1/2 (215.90)	11 15/16 (303.21)	6 11/16 (169.86)	4 3/16 (106.36)	7/16 (11.11)	2 1/2 (63.50)	2	12.374 (314.30)	1/8 (3.18)	3 5/8 (92.08)	3 1/4 (82.55)	6 1/4 (158.75)	1 3/8 (34.93)	4 7/16 (111.13)	–	–	–	–	311
114	17 1/2 (444.5)	16 1/4 (412.75)	5/8−11	6	15.125 (384.18)	14 (355.6)	4 5/16 (109.54)	4 1/2 (114.30)	10 3/4 (273.05)	14 3/8 (365.13)	5 1/8 (130.18)	1 7/8 (47.63)	11/32 (8.73)	2 1/4 (57.15)	2	15.124 (384.15)	1/4 (6.35)	5 3/8 (136.53)	4 3/4 (120.65)	7 (177.80)	1 5/8 (41.28)	4 7/8 (123.83)	5 1/2 (139.70)	3 3/8 (85.73)	1/8 (3.18)	3 1/4 (82.55)	114
214	17 1/2 (444.5)	16 1/4 (412.75)	5/8−11	6	15.125 (384.18)	14 (355.6)	5 3/4 (146.05)	4 1/2 (114.30)	10 3/4 (273.05)	14 3/8 (365.13)	6 9/16 (166.69)	3 1/4 (82.55)	11/32 (8.73)	2 1/4 (57.15)	2	15.124 (384.15)	1/4 (6.35)	5 3/8 (136.53)	4 3/4 (120.65)	7 (177.80)	1 5/8 (41.28)	4 7/8 (123.83)	5 1/2 (139.70)	3 3/8 (85.73)	1/8 (3.18)	3 1/4 (82.55)	214
314	17 1/2 (444.5)	16 1/4 (412.75)	5/8−11	6	15.125 (384.18)	14 (355.6)	7 3/16 (182.56)	4 1/2 (114.30)	10 3/4 (273.05)	14 3/8 (365.13)	8 (203.20)	4 3/4 (120.65)	11/32 (8.73)	2 1/4 (57.15)	2	15.124 (384.15)	1/4 (6.35)	5 3/8 (136.53)	4 3/4 (120.65)	7 (177.80)	1 5/8 (41.28)	4 7/8 (123.83)	5 1/2 (139.70)	3 3/8 (85.73)	1/8 (3.18)	3 1/4 (82.55)	314
114H	17 1/2 (444.5)	16 1/4 (412.75)	5/8−11	6	15.125 (384.18)	14 (355.6)	4 5/16 (109.54)	4 1/2 (114.30)	12 1/2 (317.50)	16 5/16 (414.34)	5 1/8 (130.18)	1 7/8 (47.63)	–	2 1/4 (57.15)	2	15.124 (384.15)	1/4 (6.35)	5 3/8 (136.53)	4 3/4 (120.65)	7 (177.80)	1 5/8 (41.28)	4 7/8 (123.83)	5 1/2 (139.70)	3 3/8 (85.73)	1/8 (3.18)	3 1/4 (82.55)	114H
214H	17 1/2 (444.5)	16 1/4 (412.75)	5/8−11	6	15.125 (384.18)	14 (355.6)	5 3/4 (146.05)	4 1/2 (114.30)	12 1/2 (317.50)	16 5/16 (414.34)	6 5/8 (168.28)	3 1/4 (82.55)	–	2 1/4 (57.15)	2	15.124 (384.15)	1/4 (6.35)	5 3/8 (136.53)	4 3/4 (120.65)	7 (177.80)	1 5/8 (41.28)	4 7/8 (123.83)	5 1/2 (139.70)	3 3/8 (85.73)	1/8 (3.18)	3 1/4 (82.55)	214H
314H	17 1/2 (444.5)	16 1/4 (412.75)	5/8−11	6	15.125 (384.18)	14 (355.6)	7 3/16 (182.56)	4 1/2 (114.30)	12 1/2 (317.50)	16 5/16 (414.34)	8 (203.20)	4 3/4 (120.65)	–	2 1/4 (57.15)	2	15.124 (384.15)	1/4 (6.35)	5 3/8 (136.53)	4 3/4 (120.65)	7 (177.80)	1 5/8 (41.28)	4 7/8 (123.83)	5 1/2 (139.70)	3 3/8 (85.73)	1/8 (3.18)	3 1/4 (82.55)	314H
116	20 (508)	18 3/4 (476.25)	5/8−11	6	17.500 (444.5)	16 (406.4)	4 5/16 (109.54)	4 7/8 (123.83)	12 1/2 (317.50)	16 19/64 (413.94)	5 3/16 (131.76)	1 7/8 (47.63)	3/4 (19.05)	2 1/4 (57.15)	2	17.499 (444.48)	1/4 (6.35)	6 1/8 (155.58)	5 1/2 (139.70)	7 (177.80)	1 7/8 (47.63)	4 7/8 (123.83)	7 9/16 (192.09)	3 11/16 (93.66)	1/8 (3.18)	5 1/2 (139.70)	116
216	20 (508)	18 3/4 (476.25)	5/8−11	6	17.500 (444.5)	16 (406.4)	5 3/4 (146.05)	4 7/8 (123.83)	12 1/2 (317.50)	16 19/64 (413.94)	6 9/16 (166.69)	3 1/4 (82.55)	3/4 (19.05)	2 1/4 (57.15)	2	17.499 (444.48)	1/4 (6.35)	6 1/8 (155.58)	5 1/2 (139.70)	7 (177.80)	1 7/8 (47.63)	4 7/8 (123.83)	7 9/16 (192.09)	3 11/16 (93.66)	1/8 (3.18)	5 1/2 (139.70)	216
316	20 (508)	18 3/4 (476.25)	5/8−11	6	17.500 (444.5)	16 (406.4)	7 1/4 (184.15)	4 7/8 (123.83)	12 1/2 (317.50)	16 19/64 (413.94)	8 (203.20)	4 3/4 (120.65)	3/4 (19.05)	2 1/4 (57.15)	2	17.499 (444.48)	1/4 (6.35)	6 1/8 (155.58)	5 1/2 (139.70)	7 (177.80)	1 7/8 (47.63)	4 7/8 (123.83)	7 9/16 (192.09)	3 11/16 (93.66)	1/8 (3.18)	5 1/2 (139.70)	316
118	22 (558.8)	20 3/4 (527.05)	5/8−11	6	19.500 (495.3)	18 (457.2)	4 3/4 (120.65)	5 1/4 (133.35)	14 3/16 (360.36)	19 3/8 (492.13)	5 11/16 (144.46)	1 15/16 (49.21)	3/8 (9.53)	2 7/16 (61.91)	3	19.499 (495.28)	3/8 (9.53)	6 7/8 (174.63)	5 3/4 (146.05)	8 (203.20)	2 1/4 (57.15)	5 5/8 (142.88)	8 (203.20)	4 1/2 (114.30)	1/4 (6.35)	6 (152.40)	118
218	22 (558.8)	20 3/4 (527.05)	5/8−11	6	19.500 (495.3)	18 (457.2)	6 1/4 (158.75)	5 1/4 (133.35)	14 3/16 (360.36)	19 3/8 (492.13)	7 1/4 (184.15)	3 1/2 (88.90)	3/8 (9.53)	2 7/16 (61.91)	3	19.499 (495.28)	3/8 (9.53)	6 7/8 (174.63)	5 3/4 (146.05)	8 (203.20)	2 1/4 (57.15)	5 5/8 (142.88)	8 (203.20)	4 1/2 (114.30)	1/4 (6.35)	6 (152.40)	218
318	22 (558.8)	20 3/4 (527.05)	5/8−11	6	19.500 (495.3)	18 (457.2)	7 3/4 (196.85)	5 1/4 (133.35)	14 3/16 (360.36)	19 3/8 (492.13)	8 7/8 (225.43)	5 1/8 (130.18)	3/8 (9.53)	2 7/16 (61.91)	3	19.499 (495.28)	3/8 (9.53)	6 7/8 (174.63)	5 3/4 (146.05)	8 (203.20)	2 1/4 (57.15)	5 5/8 (142.88)	8 (203.20)	4 1/2 (114.30)	1/4 (6.35)	6 (152.40)	318
118H	22 (558.8)	20 3/4 (527.05)	5/8−11	6	19.500 (495.3)	18 (457.2)	4 3/4 (120.65)	5 1/4 (133.35)	16 (406.40)	21 5/16 (541.34)	5 11/16 (144.46)	1 15/16 (49.21)	1 (25.40)	2 7/16 (61.91)	3	19.499 (495.28)	3/8 (9.53)	6 7/8 (174.63)	5 3/4 (146.05)	8 (203.20)	2 1/4 (57.15)	5 5/8 (142.88)	8 (203.20)	4 1/2 (114.30)	1/4 (6.35)	6 (152.40)	118H
218H	22 (558.8)	20 3/4 (527.05)	5/8−11	6	19.500 (495.3)	18 (457.2)	6 1/4 (158.75)	5 1/4 (133.35)	16 (406.40)	21 5/16 (541.34)	7 1/4 (184.15)	3 1/2 (88.90)	1 (25.40)	2 7/16 (61.91)	3	19.499 (495.28)	3/8 (9.53)	6 7/8 (174.63)	5 3/4 (146.05)	8 (203.20)	2 1/4 (57.15)	5 5/8 (142.88)	8 (203.20)	4 1/2 (114.30)	1/4 (6.35)	6 (152.40)	218H
318H	22 (558.8)	20 3/4 (527.05)	5/8−11	6	19.500 (495.3)	18 (457.2)	7 3/4 (196.85)	5 1/4 (133.35)	16 (406.40)	21 5/16 (541.34)	8 3/4 (222.25)	5 1/8 (130.18)	1 (25.40)	2 7/16 (61.91)	3	19.499 (495.28)	3/8 (9.53)	6 7/8 (174.63)	5 3/4 (146.05)	8 (203.20)	2 1/4 (57.15)	5 5/8 (142.88)	8 (203.20)	4 1/2 (114.30)	1/4 (6.35)	6 (152.40)	318H
121	25 (635)	23 3/4 (603.25)	5/8−11	6	22.500 (571.5)	21 (533.4)	5 7/8 (149.23)	7 (177.80)	16 (406.40)	21 5/16 (541.34)	6 9/16 (166.69)	2 1/2 (63.50)	1 (25.40)	2 3/8 (60.33)	3	22.499 (571.48)	1/4 (6.35)	6 3/4 (171.45)	6 (152.40)	9 1/2 (241.30)	2 1/2 (63.50)	6 5/8 (168.28)	10 1/2 (266.70)	6 1/2 (165.10)	1/4 (6.35)	6 (152.40)	121
221	25 (635)	23 3/4 (603.25)	5/8−11	6	22.500 (571.5)	21 (533.4)	7 1/4 (184.15)	7 (177.80)	16 (406.40)	21 5/16 (541.34)	8 3/8 (212.73)	4 3/8 (111.13)	1 (25.40)	2 3/8 (60.33)	3	22.499 (571.48)	1/4 (6.35)	6 3/4 (171.45)	6 (152.40)	9 1/2 (241.30)	2 1/2 (63.50)	6 5/8 (168.28)	10 1/2 (266.70)	6 1/2 (165.10)	1/4 (6.35)	6 (152.40)	221
321	25 (635)	23 3/4 (603.25)	5/8−11	6	22.500 (571.5)	21 (533.4)	8 5/8 (219.08)	7 (177.80)	16 (406.40)	21 5/16 (541.34)	10 1/8 (257.18)	6 1/4 (158.75)	1 (25.40)	2 3/8 (60.33)	3	22.499 (571.48)	1/4 (6.35)	6 3/4 (171.45)	6 (152.40)	9 1/2 (241.30)	2 1/2 (63.50)	6 5/8 (168.28)	10 1/2 (266.70)	6 1/2 (165.10)	1/4 (6.35)	6 (152.40)	321
124H	28 (711.2)	26 3/4 (679.45)	5/8−11	6	25.500 (647.7)	24 (609.6)	5 7/8 (149.23)	7 (177.80)	21 (533.40)	27 (685.80)	6 3/4 (171.45)	2 13/16 (71.44)	1 (25.40)	2 3/4 (69.85)	3	25.498 (647.65)	–	–	–	10 (254.00)	3 (76.20)	7 (177.80)	11 1/8 (282.58)	5 5/8 (142.88)	1/8 (3.18)	7 5/16 (185.74)	124H
224H	28 (711.2)	26 3/4 (679.45)	5/8−11	6	25.500 (647.7)	24 (609.6)	7 1/4 (184.15)	7 (177.80)	21 (533.40)	27 (685.80)	8 1/2 (215.90)	4 1/2 (114.30)	1 (25.40)	2 3/4 (69.85)	3	25.498 (647.65)	–	–	–	10 (254.00)	3 (76.20)	7 (177.80)	11 1/8 (282.58)	5 5/8 (142.88)	1/8 (3.18)	7 5/16 (185.74)	224H
324H	28 (711.2)	26 3/4 (679.45)	5/8−11	6	25.500 (647.7)	24 (609.6)	9 3/8 (238.13)	7 (177.80)	21 (533.40)	27 (685.80)	10 1/2 (266.70)	6 1/4 (158.75)	1 (25.40)	2 3/4 (69.85)	3	25.498 (647.65)	–	–	–	10 (254.00)	3 (76.20)	7 (177.80)	11 1/8 (282.58)	5 5/8 (142.88)	1/8 (3.18)	7 5/16 (185.74)	324H
124SHD	28 (711.2)	26 3/4 (679.45)	5/8−11	6	25.500 (647.7)	24 (609.6)	5 7/8 (149.23)	7 (177.80)	21 (533.40)	27 (685.80)	6 7/8 (174.63)	2 13/16 (71.44)	1 (25.40)	2 3/4 (69.85)	2	25.498 (647.65)	–	–	–	10 (254.00)	3 (76.20)	7 (177.80)	11 1/8 (282.58)	5 5/8 (142.88)	1/8 (3.18)	7 5/16 (185.74)	124SHD
224SHD	28 (711.2)	26 3/4 (679.45)	5/8−11	6	25.500 (647.7)	24 (609.6)	7 1/4 (184.15)	7 (177.80)	21 (533.40)	27 (685.80)	8 1/2 (215.90)	4 1/2 (114.30)	1 (25.40)	2 3/4 (69.85)	2	25.498 (647.65)	–	–	–	10 (254.00)	3 (76.20)	7 (177.80)	11 1/8 (282.58)	5 5/8 (142.88)	1/8 (3.18)	7 5/16 (185.74)	224SHD
324SHD	28 (711.2)	26 3/4 (679.45)	5/8−11	6	25.500 (647.7)	24 (609.6)	9 3/8 (238.13)	7 (177.80)	21 (533.40)	27 (685.80)	10 1/2 (266.70)	6 1/4 (158.75)	1 (25.40)	2 3/4 (69.85)	2	25.498 (647.65)	–	–	–	10 (254.00)	3 (76.20)	7 (177.80)	11 1/8 (282.58)	5 5/8 (142.88)	1/8 (3.18)	7 5/16 (185.74)	324SHD
227	31 (787.4)	29 3/4 (755.65)	5/8−11	12	28.500 (723.9)	27 (685.8)	7 (177.80)	9 (228.60)	21 (533.40)	27 (685.80)	8 3/4 (222.25)	4 1/2 (114.30)	1 (25.40)	2 3/8 (60.33)	3	28.498 (723.85)	–	–	–	11 1/2 (292.10)	5 (127.00)	8 (203.20)	7 15/16 (201.61)	2 3/8 (60.33)	1/8 (3.18)	7 5/16 (185.74)	227
327	31 (787.4)	29 3/4 (755.65)	5/8−11	12	28.500 (723.9)	27 (685.8)	9 (228.60)	9 (228.60)	21 (533.40)	27 (685.80)	10 3/4 (273.05)	6 1/2 (165.10)	1 (25.40)	2 3/8 (60.33)	3	28.498 (723.85)	–	–	–	11 1/2 (292.10)	5 (127.00)	8 (203.20)	7 15/16 (201.61)	2 3/8 (60.33)	1/8 (3.18)	7 5/16 (185.74)	327
230H	34 (863.6)	32 3/4 (831.85)	5/8−11	12	31.500 (800.1)	30 (762)	8 1/2 (215.90)	9 (228.60)	24 3/4 (628.65)	32 3/8 (822.33)	10 3/16 (258.76)	5 5/8 (142.88)	1/4 (6.35)	2 7/8 (73.03)	4	31.498 (800.05)	–	–	–	14 (355.60)	3 1/2 (88.90)	9 3/4 (247.65)	12 1/2 (317.50)	6 (152.40)	1/4 (6.35)	8 3/4 (222.25)	230H
330H	34 (863.6)	32 3/4 (831.85)	5/8−11	12	31.500 (800.1)	30 (762)	10 7/8 (276.23)	9 (228.60)	24 3/4 (628.65)	32 3/8 (822.33)	12 3/4 (323.85)	8 1/8 (206.38)	1/4 (6.35)	2 7/8 (73.03)	4	31.498 (800.05)	–	–	–	14 (355.60)	3 1/2 (88.90)	9 3/4 (247.65)	12 1/2 (317.50)	6 (152.40)	1/4 (6.35)	8 3/4 (222.25)	330H
236	41 (1041.4)	39 3/4 (1009.65)	5/8−11	12	38.500 (977.9)	36 (914.4)	9 3/4 (247.65)	13 1/2 (342.90)	30 1/2 (774.70)	38 1/4 (971.55)	11 7/8 (301.63)	6 1/4 (158.75)	1/4 (6.35)	2 7/8 (73.03)	4	38.498 (977.85)	–	–	–	14 (355.60)	6 (152.40)	9 3/4 (247.65)	12 1/4 (311.15)	4 3/8 (111.13)	1/4 (6.35)	10 (254.00)	236
336	41 (1041.4)	39 3/4 (1009.65)	5/8−11	12	38.500 (977.9)	36 (914.4)	12 7/8 (327.03)	13 1/2 (342.90)	30 1/2 (774.70)	38 1/4 (971.55)	14 3/4 (374.65)	9 1/8 (231.78)	1/4 (6.35)	2 7/8 (73.03)	4	38.498 (977.85)	–	–	–	14 (355.60)	6 (152.40)	9 3/4 (247.65)	12 1/4 (311.15)	4 3/8 (111.13)	1/4 (6.35)	10 (254.00)	336
242	49 1/4 (1250.95)	47 1/4 (1200.15)	1−8	12	45.000 (1143)	42 (1066.8)	10 1/2 (266.70)	21 1/16 (534.99)	35 (889.00)	44 1/8 (1120.78)	11 3/8 (288.93)	6 1/2 (165.10)	1 1/4 (31.75)	3 1/2 (88.90)	4	44.998 (1142.95)	–	–	–	18 (457.20)	7 (177.80)	12 9/16 (319.09)	13 7/16 (341.31)	5 15/16 (150.81)	1/4 (6.35)	10 (254.00)	242
342	49 1/4 (1250.95)	47 1/4 (1200.15)	1−8	12	45.000 (1143)	42 (1066.8)	11 7/8 (301.63)	21 1/16 (534.99)	35 (889.00)	44 1/8 (1120.78)	14 1/8 (358.78)	9 5/8 (244.48)	1 1/4 (31.75)	3 1/2 (88.90)	4	44.998 (1142.95)	–	–	–	18 (457.20)	7 (177.80)	12 9/16 (319.09)	13 7/16 (341.31)	5 15/16 (150.81)	1/4 (6.35)	10 (254.00)	342
248	56 (1422.41)	54 (1371.61)	1−8	12	52.000 (1320.81)	48 (1219.2)	10 7/8 (276.23)	21 (533.40)	40 (1016.00)	52 3/8 (1330.33)	13 (330.20)	7 1/2 (190.50)	3/4 (19.05)	3 1/2 (88.90)	4	51.998 (1320.75)	–	–	–	20 (508.00)	8 (203.20)	14 (355.60)	16 3/4 (425.45)	6 5/8 (168.28)	1/2 (12.70)	13 5/8 (346.08)	248
348	56 (1422.41)	54 (1371.61)	1−8	12	52.000 (1320.81)	48 (1219.2)	13 5/8 (346.08)	21 (533.40)	40 (1016.00)	52 3/8 (1330.33)	15 3/4 (400.05)	9 7/8 (250.83)	3/4 (19.05)	3 1/2 (88.90)	4	51.998 (1320.75)	–	–	–	20 (508.00)	8 (203.20)	14 (355.60)	16 3/4 (425.45)	6 5/8 (168.28)	1/2 (12.70)	13 5/8 (346.08)	348
260	66 3/4 (1695.46)	64 3/4 (1644.66)	1−8	24	62.750 (1593.86)	60 (1524.01)	16 1/4 (412.75)	22 5/8 (574.68)	46 1/2 (1181.10)	61 1/2 (1562.11)	16 1/4 (412.75)	9 (228.60)	1/4 (6.35)	2 (50.80)	6	62.748 (1593.81)	–	–	–	24 (609.60)	10 (254.00)	16 3/4 (425.45)	24 1/8 (612.78)	11 7/8 (301.63)	3/8 (9.53)	16 1/4 (412.75)	260
360	66 3/4 (1695.46)	64 3/4 (1644.66)	1−8	24	62.750 (1593.86)	60 (1524.01)	20 (508.00)	22 5/8 (574.68)	46 1/2 (1181.10)	61 1/2 (1562.11)	20 (508.00)	13 (330.20)	1/4 (6.35)	2 (50.80)	6	62.748 (1593.81)	–	–	–	24 (609.60)	10 (254.00)	16 3/4 (425.45)	24 1/8 (612.78)	11 7/8 (301.63)	3/8 (9.53)	16 1/4 (412.75)	360
460	66 3/4 (1695.46)	64 3/4 (1644.66)	1−8	24	62.750 (1593.86)	60 (1524.01)	23 1/2 (596.90)	22 5/8 (574.68)	46 1/2 (1181.10)	61 1/2 (1562.11)	23 1/2 (596.90)	16 1/2 (419.10)	1/4 (6.35)	2 (50.80)	6	62.748 (1593.81)	–	–	–	24 (609.60)	10 (254.00)	16 3/4 (425.45)	24 1/8 (612.78)	11 7/8 (301.63)	3/8 (9.53)	16 1/4 (412.75)	460

规格参数 Specifications

型号 Size	额定扭矩 Torque Rating @100 psi(lb-in)/7 bar(Nm)				最大转速 Maximun Speed	重量与转动惯量 Weight and Inertia				齿毂内孔范围 Bore Range	
	静态扭矩 Static Torque		动态扭矩 Dynamic Torque			总重量 Total Weight	转动惯量 Total Inertia	主动齿圈及摩擦盘重量 Ring&FD Weight	主动齿圈及摩擦盘转动惯量 Ring & FD Inertia	最小值 Minimum	最大值 Maximum
	lb-in	Nm	lb-in	Nm	rpm	lbs(kgs)	lbft2(wr2) (kgm2(J))	lbs (kLgs)	lbft2(wr2) (kgm2(J))	inches (mm)	inches (mm)
108	7,300	835	5,500	630	3,600	30 (14)	2.4 (0.102)	8.3 (3.7)	1.2 (0.048)	0.94 (23.8)	1.94 (49.2)
208	14,600	1,670	11,000	1,260	3,600	20 (23)	4.3 (0.179)	17 (7.5)	2.3 (0.098)	0.94 (23.8)	1.94 (49.2)
308	21,900	2,505	16,500	1,890	3,600	67 (30)	6.0 (0.254)	25 (11)	3.5 (0.149)	1.13 (28.6)	1.94 (49.2)
111	16,600	1,905	12,450	1,425	2,650	55 (25)	9.2 (0.388)	19 (9)	5.4 (0.227)	1.25 (31.8)	3.0 (76.2)
211	33,200	3,810	24,900	2,850	2,650	96 (44)	16.4 (0.690)	37 (17)	10.4 (0.438)	1.25 (31.8)	3.0 (76.2)
311	49,800	5,715	37,350	4,275	2,650	132 (60)	22.9 (0.965)	52 (24)	15.3 (0.645)	1.25 (31.8)	3.0 (76.2)
114	29,150	3,345	21,900	2,510	2,180	124 (56)	35.2 (1.49)	38 (17)	17.1 (0.721)	2.13 (54.0)	3.25 (82.6)
214	58,300	6,690	43,800	5,020	2,180	176 (80)	47.9 (2.02)	57 (26)	24.6 (1.04)	2.13 (54.0)	3.25 (82.6)
314	87,450	10,035	65,700	7,530	2,180	239 (109)	72.0 (3.04)	97 (44)	42.3 (1.79)	2.13 (54.0)	3.25 (82.6)
114H	35,400	4,065	26,600	3,050	2,180	161 (73)	41.2 (1.74)	38 (17)	17.1 (0.721)	2.13 (54.0)	3.25 (82.6)
214H	70,800	8,130	53,200	6,100	2,180	212 (96)	57.1 (2.41)	57 (26)	24.6 (1.04)	2.13 (54.0)	3.25 (82.6)
314H	106,200	12,195	79,800	9,150	2,180	290 (132)	79.6 (3.36)	97 (44)	42.3 (1.79)	2.13 (54.0)	3.25 (82.6)
116	39,750	4,560	29,800	3,420	1,900	218 (99)	60.6 (2.56)	41 (19)	23.1 (0.973)	2.13 (54.0)	3.41 (86.6)
216	79,500	9,120	59,600	6,840	1,900	296 (134)	87.9 (3.71)	79 (36)	41.8 (1.76)	2.13 (54.0)	3.41 (86.6)
316	119,250	13,680	89,400	10,260	1,900	380 (172)	117 (4.93)	116 (53)	61.2 (2.58)	2.13 (54.0)	3.41 (86.6)
118	66,400	7,620	49,800	5,715	1,750	277 (125)	90 (3.78)	44 (20)	28.3 (1.19)	2.38 (60.3)	3.88 (98.4)
218	132,800	15,240	99,600	11,430	1,750	397 (180)	142 (6.00)	95 (43)	61.6 (2.60)	2.38 (60.3)	3.88 (98.4)
318	199,200	22,860	149,400	17,145	1,750	501 (227)	189 (7.97)	144 (66)	93.3 (3.94)	2.38 (60.3)	3.88 (98.4)
118H	82,000	9,405	61,500	7,055	1,750	294 (134)	100 (4.22)	44 (20)	28.3 (1.19)	2.38 (60.3)	3.88 (98.4)
218H	164,000	18,810	123,000	14,110	1,750	414 (188)	151 (6.36)	95 (43)	61.6 (2.60)	2.38 (60.3)	3.88 (98.4)
318H	246,000	28,215	184,500	21,165	1,750	525 (238)	199 (8.40)	144 (66)	93.3 (3.94)	2.38 (60.3)	3.88 (98.4)
121	95,400	10,950	71,500	8,205	1,525	390 (177)	179 (7.57)	63 (29)	56.1 (2.37)	2.75 (69.9)	4.75 (120.7)
221	190,800	21,900	143,000	16,410	1,525	566 (257)	283 (12.0)	138 (63)	124 (5.22)	2.75 (69.9)	4.75 (120.7)
321	286,200	32,850	214,500	24,615	1,525	738 (335)	381 (16.1)	210 (95)	186 (7.83)	2.75 (69.9)	4.75 (120.7)
124H	160,600	18,435	120,500	13,830	1,350	593 (269)	373 (15.7)	115 (52)	132 (5.55)	2.75 (69.9)	4.75 (120.7)
224H	321,200	36,870	241,000	27,660	1,350	800 (363)	510 (21.5)	190 (86)	207 (8.75)	2.75 (69.9)	4.75 (120.7)
324H	481,800	55,305	361,500	41,490	1,350	993 (450)	622 (26.2)	250 (113)	259 (10.9)	2.75 (69.9)	4.75 (120.7)
124SHD	206,950	23,745	155,200	17,810	1,350	613 (278)	380 (16.1)	115 (52)	132 (5.55)	2.75 (69.9)	4.75 (120.7)
224SHD	413,900	47,490	310,400	35,620	1,350	820 (372)	517 (21.8)	190 (86)	207 (8.75)	2.75 (69.9)	4.75 (120.7)
324SHD	620,850	71,235	465,600	53,430	1,350	1013 (460)	629 (26.6)	250 (113)	259 (10.9)	2.75 (69.9)	4.75 (120.7)
227	361,100	41,450	270,800	31,080	1,200	926 (420)	696 (29.4)	190 (86)	250 (10.6)	3.50 (88.9)	7.00 (177.8)
327	541,650	62,175	406,200	46,620	1,200	1,243 (564)	949 (40.1)	302 (137)	399 (16.8)	3.50 (88.9)	7.00 (177.8)
230H	690,800	79,260	518,000	59,450	1,100	1,470 (667)	1,315 (55.5)	292 (132)	444 (18.7)	3.88 (98.5)	7.00 (177.8)
330H	1,036,200	118,890	777,000	89,175	1,100	1,868 (847)	1,704 (71.9)	427 (194)	647 (27.3)	3.88 (98.5)	7.00 (177.8)
236	1,063,250	122,000	797,400	91,500	900	2,145 (973)	2,955 (125)	426 (193)	956 (40.4)	5.00 (127.0)	9.0 (228.6)
336	1,594,875	183,000	1,196,100	137,250	900	2,907 (1,318)	3,319 (140)	644 (292)	980 (41.4)	5.00 (127.0)	9.0 (228.6)
242	1,518,200	174,200	1,138,600	130,650	750	3,135 (1,422)	5,466 (231)	676 (307)	2,235 (94.3)	7.00 (177.8)	11.0 (279.4)
342	2,277,300	261,300	1,707,900	195,975	750	4,062 (1,843)	7,478 (316)	1,053 (478)	3,489 (147)	7.00 (177.8)	11.0 (279.4)
248	2,832,000	325,000	2,124,400	243,800	650	4,688 (2,127)	10,743 (453)	799 (362)	3,386 (143)	8.00 (203.2)	12.0 (304.8)
348	4,248,000	487,500	3,186,600	365,700	650	5,801 (2,631)	13,501 (570)	1,138 (516)	4,786 (202)	8.00 (203.2)	12.0 (304.8)
260	5,670,000	650,900	4,252,500	488,100	525	7,450 (3,379)	22,752 (960)	1,470 (667)	8,546 (361)	11.00 (279.4)	15.0 (381.0)
360	8,505,000	976,350	6,378,750	732,150	525	9,431 (4,278)	30,978 (1,307)	2,242 (1,017)	13,028 (550)	11.00 (279.4)	15.0 (381.0)
460	11,340,000	1,301,800	8,505,000	976,200	525	11,656 (5,287)	39,545 (1,669)	3,060 (1,388)	17,868 (754)	11.00 (279.4)	15.0 (381.0)

国家高新技术企业
National High-Tech Enterprise
DALIN 河南大林

3 低惯性离合器和制动器
Low Inertia Clutches and Brakes





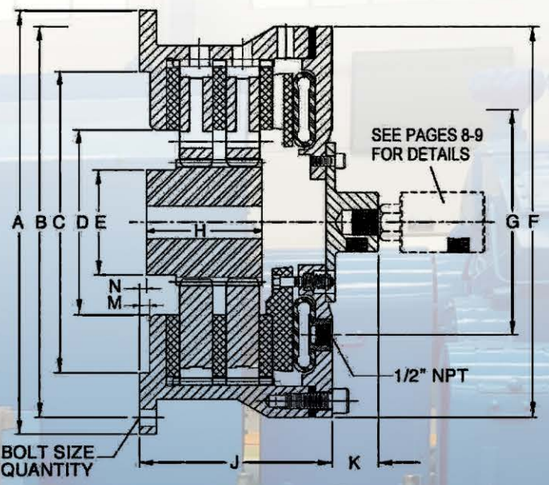

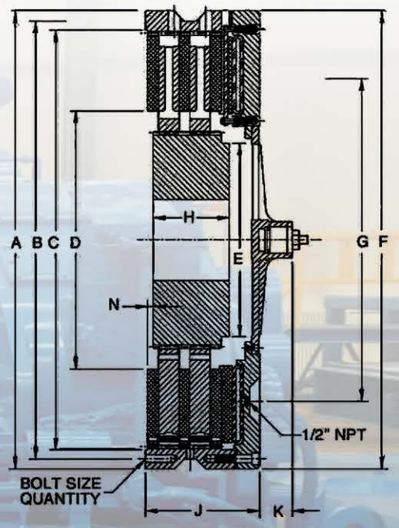

尺寸数据 Dimensions Inches (mm)

型号 Size	A +.000/-.003 (+.000/-.076)	B	C +.003/-.000 (+.076/-.000)	D	E	F	G	H	J	**K仅针对离合器 USE FOR CLUTCH ONLY	螺栓规格 BOLT SIZE	螺栓数量 QTY	M	N
104	7.375 (187.33)	6.875 (174.63)	4.375 (111.13)	2 7/8 (73.03)	NA	6 3/8 (161.93)	NA	1 (25.40)	2 9/16 (65.09)	NA	1/4	6	1/8 (3.18)	1/16 (1.59)
204	7.375 (187.33)	6.875 (174.63)	4.375 (111.13)	2 7/8 (73.03)	NA	6 3/8 (161.93)	NA	1 7/8 (47.63)	3 9/16 (90.49)	NA	1/4	6	1/8 (3.18)	0
106	8.753 (222.33)	8.000 (203.20)	7.377 (187.38)	4 3/16 (106.36)	2 11/16 (68.26)	8 13/16 (223.84)	4 3/4 (120.65)	2 (50.80)	3 3/4 (95.25)	1 7/16 (36.51)	5/16	4	1/16 (1.59)	1/16 (1.59)
206	8.753 (222.33)	8.000 (203.20)	7.377 (187.38)	4 3/16 (106.36)	2 11/16 (68.26)	8 13/16 (223.84)	4 3/4 (120.65)	3 1/4 (82.55)	4 15/16 (125.41)	1 7/16 (36.51)	5/16	4	1/16 (1.59)	1/16 (1.59)
108	12.125 (307.98)	11.125 (282.58)	8.375 (212.73)	5 3/8 (136.53)	3 1/2 (88.90)	11 1/8 (282.58)	6 5/8 (168.28)	2 (50.80)	4 9/16 (115.89)	1 3/4 (44.45)	1/2	6	1/4 (6.35)	1/4 (6.35)
208	12.125 (307.98)	11.125 (282.58)	8.375 (212.73)	5 3/8 (136.53)	3 1/2 (88.90)	11 1/8 (282.58)	6 5/8 (168.28)	3 1/4 (82.55)	5 15/16 (150.81)	1 3/4 (44.45)	1/2	6	1/4 (6.35)	5/16 (7.94)
111	16.000 (406.40)	14.750 (374.65)	11.375 (288.93)	7 (177.80)	4 (101.60)	14 3/4 (374.65)	8 1/2 (215.90)	2 3/4 (69.85)	5 7/16 (138.11)	1 3/4 (44.45)	5/8	6	3/8 (9.53)	1/8 (3.18)
211	16.000 (406.40)	14.750 (374.65)	11.375 (288.93)	7 (177.80)	4 (101.60)	14 3/4 (374.65)	8 1/2 (215.90)	4 3/8 (111.13)	7 1/4 (184.15)	1 3/4 (44.45)	5/8	6	3/8 (9.53)	1/4 (6.35)
311	16.000 (406.40)	14.750 (374.65)	11.375 (288.93)	7 (177.80)	4 (101.60)	14 3/4 (374.65)	8 1/2 (215.90)	6 1/8 (155.58)	8 15/16 (227.01)	1 3/4 (44.45)	5/8	6	3/8 (9.53)	1/4 (6.35)
114	18.750 (476.25)	17.500 (444.50)	14.375 (365.13)	9 7/16 (239.71)	5 1/2 (139.70)	17 1/2 (444.50)	10 3/4 (273.05)	3 3/4 (95.25)	6 (152.40)	1 7/8 (47.63)	5/8	8	3/8 (9.53)	1/8 (3.18)
214	18.750 (476.25)	17.500 (444.50)	14.375 (365.13)	9 7/16 (239.71)	5 1/2 (139.70)	171/2 (444.50)	10 3/4 (273.05)	4 1/2 (114.30)	8 (203.20)	1 7/8 (47.63)	5/8	8	3/8 (9.53)	3/8 (9.53)
314	18.750 (476.25)	17.500 (444.50)	14.375 (365.13)	9 7/16 (239.71)	5 1/2 (139.70)	17 1/2 (444.50)	10 3/4 (273.05)	6 1/2 (165.10)	9 13/16 (249.24)	1 7/8 (47.63)	5/8	8	3/8 (9.53)	3/8 (9.53)
116	21.248 (539.70)	20.000 (508.00)	16.250 (412.75)	10 1/2 (266.70)	6 (152.40)	20 (508.00)	12 1/2 (317.50)	4 (101.60)	6 5/16 (160.34)	2 (50.80)	5/8	12	3/8 (9.53)	3/8 (9.53)
216	21.248 (539.70)	20.000 (508.00)	16.250 (412.75)	10 1/2 (266.70)	6 (152.40)	20 (508.00)	12 1/2 (317.50)	4 3/4 (120.65)	8 1/4 (209.55)	2 (50.80)	5/8	12	3/8 (9.53)	3/8 (9.53)
316	21.248 (539.70)	20.000 (508.00)	16.250 (412.75)	10 1/2 (266.70)	6 (152.40)	20 (508.00)	12 1/2 (317.50)	6 5/8 (168.28)	10 1/8 (257.18)	2 (50.80)	5/8	12	3/8 (9.53)	3/8 (9.53)
118	23.250 (590.55)	22.000 (558.80)	18.250 (463.55)	12 1/2 (317.50)	7 (177.80)	22 (558.80)	14 3/16 (360.36)	4 (101.60)	6 3/4 (171.45)	2 (50.80)	5/8	12	3/8 (9.53)	7/16 (11.11)
218	23.250 (590.55)	22.000 (558.80)	18.250 (463.55)	12 1/2 (317.50)	7 (177.80)	22 (558.80)	14 3/16 (360.36)	4 3/4 (120.65)	8 5/8 (219.08)	2 (50.80)	5/8	12	3/8 (9.53)	7/16 (11.11)
318	23.250 (590.55)	22.000 (558.80)	18.250 (463.55)	12 1/2 (317.50)	7 (177.80)	22 (558.80)	14 3/16 (360.36)	6 1/2 (165.10)	10 5/16 (261.94)	2 (50.80)	5/8	12	3/8 (9.53)	7/16 (11.11)
121	27.000 (685.80)	25.500 (647.70)	21.375 (542.93)	14 1/2 (368.30)	9 (228.60)	24 7/8 (631.83)	16 (406.40)	4 (101.60)	7 3/8 (187.33)	2 (50.80)	5/8	12	5/16 (7.94)	3/4 (19.05)
221	27.000 (685.80)	25.500 (647.70)	21.375 (542.93)	14 1/2 (368.30)	9 (228.60)	24 7/8 (631.83)	16 (406.40)	5 1/8 (130.18)	9 1/2 (241.30)	2 (50.80)	5/8	12	5/16 (7.94)	5/8 (15.88)
321	27.000 (685.80)	25.500 (647.70)	21.375 (542.93)	14 1/2 (368.30)	9 (228.60)	24 7/8 (631.83)	16 (406.40)	7 (177.80)	11 9/16 (293.69)	2 (50.80)	5/8	12	5/16 (7.94)	3/4 (19.05)
124H	30.000 (762.00)	28.750 (730.25)	24.375 (619.13)	14 1/2 (368.30)	9 (228.60)	29 (736.60)	21 (533.40)	4 (101.60)	7 5/8 (193.68)	2 1/8 (53.98)	5/8	12	1/4 (6.35)	5/8 (15.88)
224H	30.000 (762.00)	28.750 (730.25)	24.375 (619.13)	14 1/2 (368.30)	9 (228.60)	29 (736.60)	21 (533.40)	5 1/8 (130.18)	9 15/16 (252.41)	2 1/8 (53.98)	5/8	12	1/4 (6.35)	3/4 (19.05)
324H	30.000 (762.00)	28.750 (730.25)	24.375 (619.13)	14 1/2 (368.30)	9 (228.60)	29 (736.60)	21 (533.40)	7 1/2 (190.50)	12 3/16 (309.56)	2 1/8 (53.98)	5/8	12	1/4 (6.35)	3/4 (19.05)
227	32.750 (831.85)	31.500 (800.10)	27.375 (695.33)	16 1/4 (412.75)	9 (228.60)	31 (787.40)	21 (533.40)	6 7/8 (174.63)	10 3/8 (263.53)	16 15/32 (418.31)	5/8	16	1/4 (6.35)	3/4 (19.05)
327	32.750 (831.85)	31.500 (800.10)	27.375 (695.33)	16 1/4 (412.75)	9 (228.60)	31 (787.40)	21 (533.40)	7 15/16 (201.61)	12 3/4 (323.85)	18 27/32 (478.63)	5/8	16	1/4 (6.35)	3/4 (19.05)
230H	37.000 (939.80)	35.500 (901.70)	30.375 (771.53)	19 1/4 (488.95)	10 (254.00)	34 3/4 (882.65)	24 3/4 (628.65)	7 1/8 (180.98)	11 11/16 (296.86)	4 3/8 (111.13)	3/4	18	1/4 (6.35)	1 7/8 (47.63)
330H	37.000 (939.80)	35.500 (901.70)	30.375 (771.53)	19 1/4 (488.95)	10 (254.00)	34 3/4 (882.65)	24 3/4 (628.65)	11 7/8 (301.63)	15 5/16 (388.94)	4 3/8 (111.13)	3/4	18	1/4 (6.35)	5/8 (15.88)
236	43.500 (1104.90)	42.000 (1066.80)	36.375 (923.93)	23 5/8 (600.08)	14 (355.60)	41 (1041.40)	30 1/2 (774.70)	9 (228.60)	12 7/8 (327.03)	3 3/4 (95.25)	3/4	18	1/4 (6.35)	5/8 (15.88)
336	43.500 (1104.90)	42.000 (1066.80)	36.375 (923.93)	23 5/8 (600.08)	14 (355.60)	41 (1041.40)	30 1/2 (774.70)	11 3/8 (288.93)	17 1/16 (433.39)	3 3/4 (95.25)	3/4	18	1/4 (6.35)	5/8 (15.88)
242*	49.000 (1244.60)	46.500 (1181.10)	45.000 (1143.00)	29 1/2 (749.30)	16 (406.40)	49 (1244.60)	35 (889.00)	7 1/2 (190.50)	11 7/8 (301.63)	4 1/2 (114.30)	1	24	1/4 (6.35)	1 1/2 (38.10)
342*	49.000 (1244.60)	46.500 (1181.10)	45.000 (1143.00)	29 1/2 (749.30)	16 (406.40)	49 (1244.60)	35 (889.00)	12 3/8 (314.33)	14 3/4 (374.65)	4 1/2 (114.30)	1	24	1/4 (6.35)	1 1/2 (38.10)
248*	56.750 (1441.45)	54.000 (1371.60)	52.000 (1320.80)	32 (812.80)	24 (609.60)	56 3/4 (1441.45)	40 (1016.00)	8 3/4 (222.25)	14 1/16 (357.19)	4 (101.60)	1	24	1/4 (6.35)	11/16 (17.46)
348*	56.750 (1441.45)	54.000 (1371.60)	52.000 (1320.80)	32 (812.80)	24 (609.60)	56 3/4 (1441.45)	40 (1016.00)	11 5/8 (295.28)	16 15/16 (430.21)	4 (101.60)	1	24	1/4 (6.35)	11/16 (17.46)
260*	70.50 (1790.70)	66.50 (1689.10)	62.750 (1593.85)	36 (914.40)	27 (685.80)	70 1/2 (1790.70)	46 1/2 (1181.00)	9 3/8 (238.13)	17 5/8 (447.68)	2 3/8 (60.33)	2	24	1/4 (6.35)	1/4 (6.35)
360*	70.50 (1790.70)	66.50 (1689.10)	62.750 (1593.85)	36 (914.40)	27 (685.80)	70 1/2 (1790.70)	46 1/2 (1181.00)	14 1/8 (358.78)	22 5/8 (574.68)	2 3/8 (60.33)	2	24	1/4 (6.35)	1/4 (6.35)
460*	70.50 (1790.70)	66.50 (1689.10)	62.750 (1593.85)	36 (914.40)	27 (685.80)	70 1/2 (1790.70)	46 1/2 (1181.00)	18 5/8 (473.08)	27 1/8 (688.98)	2 3/8 (60.33)	2	24	1/4 (6.35)	1/4 (6.35)

国家高新技术企业
National High-Tech Enterprise
DALIN 河南大林

规格参数 Specifications

型号 Size	额定扭矩 Torque Ratings@100 psl (lb-In)/7 bar(Nm)				最高转速 Maximum Speed		重量和转动惯性 WEIGHT and INERTIA				齿毂内孔范围B DRE RANGE	
	静态扭矩 Static Torque		动态扭矩 Dymamic Torque		离合器总成 Complete Clutch	齿毂与中间齿盘 Hub& CPs only	总重量 Total Weight	离合器转动惯性 Total Clutch Inertia	齿毂与中间齿盘重量 Hub&CP Weight	齿毂与中间齿盘转动惯性 Hub& CP Inertia	最小值 MInImum	最大值 MaxImum
	lb-In	Nm	lb-In	Nm	rpm	rpm	lbs (kgs)	lbft² (wr²) (kgm² (J))	lbs (kgs)	lbft² (W ²) (kgm² (J))	inches (mm)	inches (mm)
104	2340	260	1750	200	4660	7850	11 (5)	0.54 (0.023)	2.5 (1.1)	0.03 (0.0013)	0.50 (12.7)	1.8 (46)
204	4680	520	3500	400	4660	7850	15 (7)	0.56 (0.024)	4.0 (1.8)	0.04 (0.0017)	0.50 (12.7)	1.8 (46)
106	4970	570	3730	425	3900	5280	29 (13)	2.3 (0.097)	6.6 (3.0)	0.23 (0.010)	0.88 (22.2)	1.9 (48)
206	9940	1140	7460	850	3990	5280	36 (16)	3.2 (0.135)	12 (5.4)	0.49 (0.021)	0.88 (22.2)	1.9 (48)
108	7300	835	5500	630	2830	4290	63 (29)	8.2 (0.346)	13 (5.9)	0.62 (0.026)	0.94 (23.8)	2.5 (64)
208	14600	1670	11000	1260	2830	4290	72 (33)	9.3 (0.392)	24 (11)	1.2 (0.051)	1.13 (29)	2.5 (64)
111	16600	1905	12450	1425	2140	3120	141(64)	28 (1.18)	28 (13)	2.4 (0.101)	1.25 (32)	2.8 (71)
211	33200	3810	24900	2850	2140	3120	164 (74)	34 (1.43)	52 (24)	4.7 (0.198)	1.25 (32)	2.8 (71)
311	49800	5715	37350	5275	2140	3120	191 (87)	41 (1.73)	77 (35)	7.0 (0.295)	1.25 (32)	2.8 (71)
114	28900	3315	21700	2490	1830	2450	178 (81)	56 (2.36)	52 (24)	6.0 (0.253)	1.88 (48)	3.3 (85)
214	57800	6630	43400	4980	1830	2450	229 (104)	70 (2.95)	84 (38)	11.5 (0.485)	1.88 (48)	3.9 (98)
314	86700	9945	65100	7470	1830	2450	279 (127)	84 (3.54)	126 (57)	16.9 (0.712)	1.88 (48)	3.9 (98)
116	39750	4560	29800	3420	1610	2140	253 (115)	103 (4.34)	65 (30)	10.7 (0.451)	2.13 (54)	4.2 (107)
216	79500	9120	59600	6840	1610	2140	327 (148)	127 (5.35)	109 (49)	19.8 (0.834)	2.13 (54)	4.2 (107)
316	119250	13680	89400	10260	1610	2140	401 (182)	150 (6.32)	157 (71)	28.8 (1.21)	2.13 (54)	4.2 (107)
118	66400	7620	49800	5715	1470	1900	316 (143)	165 (6.95)	93 (42)	19.1 (0.805)	2.25 (57)	4.9 (125)
218	132800	15240	99600	11430	1470	1900	382 (173)	189 (7.96)	154 (70)	37.2 (1.57)	2.25 (57)	4.9 (125)
318	199200	22860	149400	17145	1470	1900	462 (210)	219 (9.23)	221 (100)	55.2 (2.33)	2.75 (70)	4.9 (125)
121	95400	10950	71500	8205	1270	1630	456 (207)	303 (12.8)	128 (58)	34 (1.43)	2.75 (70)	6.3 (160)
221	190800	21900	143000	16410	1270	1630	571 (259)	356 (15.0)	212 (96)	68 (2.87)	2.75 (70)	6.3 (160)
321	286200	32850	214500	24615	1270	1630	641 (291)	412 (17.4)	318 (144)	105 (4.43)	2.75 (70)	6.3 (160)
124H	160600	18435	120500	13830	1140	1430	623 (283)	470 (19.8)	167 (76)	57 (2.40)	2.75 (70)	6.3 (160)
224H	321200	36870	241000	27660	1140	1430	816 (370)	620 (26.1)	290 (132)	118 (4.97)	2.75 (70)	6.3 (160)
324H	481800	55305	361500	41490	1140	1430	1016(461)	765 (32.2)	435 (197)	180 (7.59)	2.75 (70)	6.3 (160)
227	361100	41450	270800	31080	1040	1270	974 (442)	890 (37.5)	353 (160)	206 (8.68)	3.25 (83)	6.3 (160)
327	541650	62175	406200	46620	1040	1270	1154 (523)	1048 (44.2)	527 (239)	298 (12.6)	3.25 (83)	6.3 (160)
230H	689200	79110	517000	59340	920	1140	1371 (622)	1579 (66.5)	562 (255)	375 (15.8)	3.50 (89)	7.0 (178)
330H	1033800	118665	775500	89010	920	1140	1730 (785)	1861 (78.4)	842 (382)	556 (23.4)	3.50 (89)	7.0 (178)
236	1068000	122600	801000	91940	790	960	1929(875)	3259 (137)	805 (365)	824 (34.7)	5.50 (140)	8.4 (213)
336	1602000	183900	1201500	137910	790	960	2545 (1154)	4144 (175)	1218 (553)	1246 (52.5)	5.50 (140)	8.4 (213)
242	1509400	173200	1132000	129900	700	820	2313 (1049)	5444 (229)	950 (431)	1176 (49.6)	7.50 (191)	11.2 (285)
342	2264100	259800	1698000	194850	700	820	2749 (1247)	6529 (275)	1425 (646)	1705 (71.8)	7.50 (191)	11.2 (285)
248	2832000	325000	2124000	243800	600	710	4165 (1889)	12810 (540)	1795 (814)	3320 (140)	10.00 (254)	14.5 (368)
348	4248000	487500	3186000	365700	600	710	5378 (2439)	17215 (725)	2838 (1287)	4800 (202)	10.00 (254)	14.5 (368)
260	5670000	650900	4252500	488100	480	570	9555 (4334)	46520 (1960)	2587(1174)	7097(299)	10.00 (254)	18.9 (480)
360	8505000	976350	6378750	732150	480	570	11634 (5277)	57512 (2424)	3890 (1765)	10635 (448)	10.00 (254)	18.9 (480)
460	11340000	1301800	8505000	976200	480	570	14245 (6462)	68020 (2866)	5540 (2513)	14650 (617)	10.00 (254)	18.9 (480)

4 单列窄型VC
SIngle Narrow VC Clutch 11.5VC to 42VC



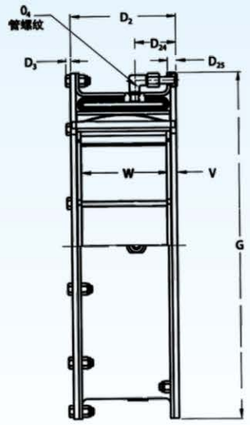

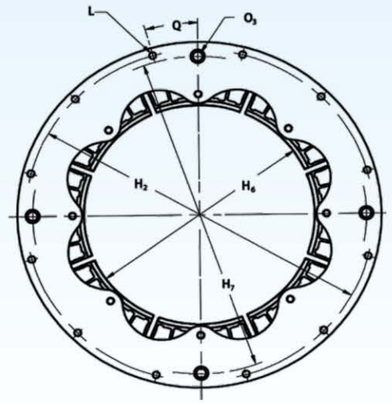

型号尺寸 Dimensions Data

型号 Size	扭矩 Torque Rating	D_2	D_3	D_{24}	D_{25}	G	H_2	H_6	H_7	L 螺栓 (Bolt) 数量 No.	L 螺栓 (Bolt) 直径 Diameter	O_3	O_4 数量 No.	O_4 尺寸Size	Q 度(Deg)	V	W 数量No.	W 宽度Width
11.5VC500	3050	156	6	60	10	498.5	479.4	295	479	16	9.5	8	2	3/8-18	11.25	14	8	127
14VC500	4430	156	8	73	15	596.9	571.5	361	565	8	12.7	10	4	3/8-18	22.50	14	8	127
16VC600	7350	187	8	73	15	647.7	619.1	412	619	12	12.7	10	4	3/8-18	15.00	17	8	152
20VC600	10500	187	8	73	15	749.3	720.7	514	721	12	12.7	10	4	3/8-18	15.00	17	10	152
24VC650	15300	195	10	73	16	863.6	831.9	615	826	16	15.9	13	4	1/2-14	11.25	15	12	165
28VC650	20600	195	10	73	16	965.2	933.5	717	927	16	15.9	13	4	1/2-14	11.25	15	14	165
33VC650	28800	195	12	79	16	1133.5	1095.4	844	1099	18	19.1	16	4	3/4-14	15.00	15	16	165
37VC650	36200	195	12	79	17	1235.1	1197.0	945	1200	20	19.1	16	4	3/4-14	9.00	15	18	165
42VC650	42900	195	12	79	17	1362.1	1324.0	1072	1327	24	19.1	16	4	3/4-14	7.50	15	20	165
公制SI	N.m @5.2bar	单位为毫米 Dimensions in millimeters																

35VC650资料修订中。 The parameters of 35VC650 is under revision.

技术参数 Technical Parameter

型号 Size	扭矩 Torque Rating	最大转速 Maximum Speed	离心力损失系数 Centrifugal Loss Constant	转动惯量 Moment of Inertia	重量 Weight	摩擦面积 Friction Area	摩擦片厚度 Friction Lining Thickness 新New	摩擦片厚度 Friction Lining Thickness 旧Worn	气胎容积 Air Tube Cavity	轮毂最小直径 Minimum Drum Diameter
11.5VC500	3050	1800	1.59E-06	1.81	43	1071	8	4	1.15	290
14VC500	4430	1500	1.93E-06	3.28	58	1322	8	4	1.56	353
16VC600	7350	1400	2.00E-06	4.83	68	1825	8	4	1.97	404
20VC600	10500	1200	2.76E-06	8.11	81	2451	8	4	2.3	505
24VC650	15300	1050	3.38E-06	15.50	111	3006	11	4	3.28	607
28VC650	20600	1000	4.00E-06	22.55	127	3535	11	4	4.43	706
33VC650	28800	900	5.11E-06	45.49	178	4147	14	7	5.9	833
37VC650	36200	800	6.21E-06	58.80	196	4644	14	7	6.56	935
42VC650	42900	800	6.56E-06	83.58	220	5302	14	7	7.22	1062
公制SI	N.m @5.2bar	rpm	bar/rpm²	kg . m²	kg	cm²	mm		dm³	mm

5 双列窄型VC
Dual Narrow VC Clutch 14VC to 66VC



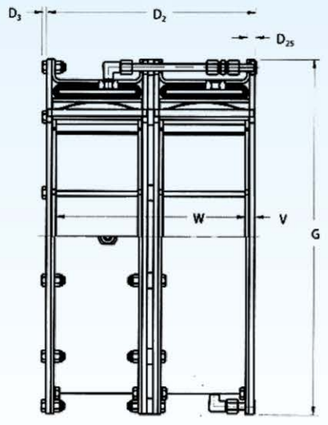

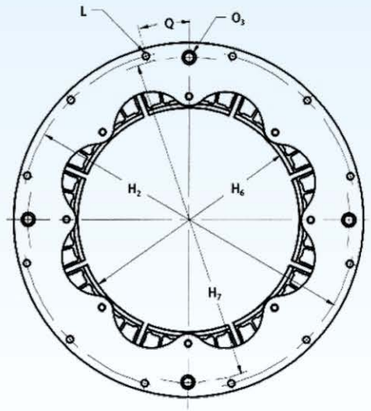

型号尺寸 Dimensions Data

型号 Size	扭矩 Torque Rating	D_2	D_3	D_{25}	G	H_2	H_6	H_7	L 螺栓 (Bolt) 数量 No.	L 螺栓 (Bolt) 直径 Diameter	O_3 数量 No.	O_3 尺寸Size	Q 度(Deg)	V	W 数量No.	W 宽度Width
11.5VC500	6100	324	6	14	498.5	479.4	295	479	16	9.5	2	8	11.25	14	16	295
14VC500	8860	322	8	14	596.9	571.5	361	565	8	12.7	4	10	22.50	14	16	294
16VC600	14700	386	8	14	647.7	619.1	412	619	12	12.7	4	10	15.00	17	16	351
20VC600	21000	386	8	14	749.3	720.7	514	721	12	12.7	4	10	15.00	17	20	351
24VC650	30500	405	10	16	863.6	831.9	615	826	16	15.9	4	13	11.25	15	24	375
28VC650	41100	405	10	16	965.2	933.5	717	927	16	15.9	4	13	11.25	15	28	375
33VC650	57600	405	12	18	1133.5	1095.4	844	1099	18	19.1	4	16	15.00	15	32	375
37VC650	72300	405	12	18	1235.1	1197.0	945	1200	20	19.1	4	16	9.00	15	36	375
42VC650	85900	405	12	18	1362.1	1324.0	1072	1327	24	19.1	4	16	7.50	15	40	375
公制SI	N.m @5.2bar	单位为毫米 Dimensions in millimeters														

35VC650资料修订中。 The parameters of 35VC650 is under revision.

技术参数 Technical Parameter

型号 Size	扭矩 Torque Rating	最大转速 Maximum Speed	离心力损失系数 Centrifugal Loss Constant	转动惯量 Moment of Inertia	重量 Weight	摩擦面积 Friction Area	摩擦片厚度 Friction Lining Thickness 新New	摩擦片厚度 Friction Lining Thickness 旧Worn	气胎容积 Air Tube Cavity	轮毂最小直径 Minimum Drum Diameter
11.5VC500	6100	1800	1.59E-06	3.61	89	2141	8	4	2.30	290
14VC500	8860	1500	1.93E-06	6.55	117	2645	8	4	3.12	353
16VC600	14700	1400	2.00E-06	9.66	139	3651	8	4	3.94	404
20VC600	21000	1200	2.76E-06	16.21	164	4902	8	4	4.59	505
24VC650	30500	1050	3.38E-06	31.00	225	6011	11	4	6.56	607
28VC650	41100	1000	4.00E-06	45.11	256	7069	11	4	8.86	706
33VC650	57600	900	5.11E-06	90.97	355	8295	14	7	11.80	833
37VC650	72300	800	6.21E-06	117.60	395	9288	14	7	13.10	935
42VC650	85900	800	6.56E-06	167.20	444	10604	14	7	14.40	1062
公制SI	N.m @5.2bar	rpm	bar/rpm²	kg . m²	kg	cm²	mm		dm³	mm

6 单列宽型VC
SIngle Wide VC Clutch 14VC to 76VC



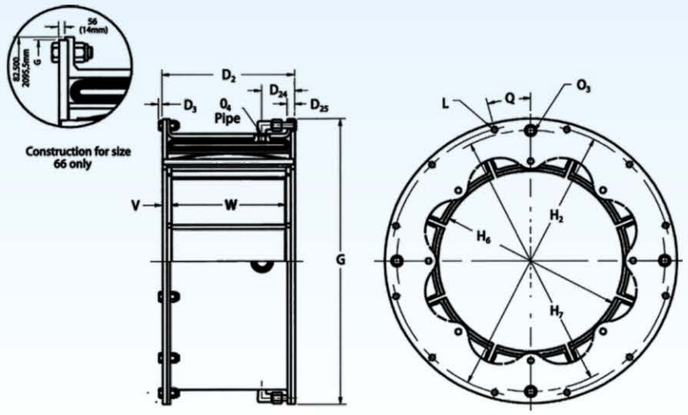

型号尺寸 Dimensions Data

型号 Size	扭矩 Torque Rating	D_2	D_3	D_{24}	D_{25}	G	H_2	H_6	H_7	L 螺栓 (Bolt) 数量 No.	L 螺栓 (Bolt) 直径 Diameter	O_3	O_4 数量 No.	O_4 尺寸Size	Q 度(Deg)	V	W 数量No.	W 宽度Width
14VC1000	9610	294	8	73	16	596.9	571.5	361	565	8	12.7	10	4	3/8-18	22.50	20	8	254
16VC1000	12900	294	8	73	16	647.7	619.1	412	619	12	12.7	10	4	3/8-18	15.00	20	8	254
20VC1000	18200	294	8	73	16	749.3	720.7	514	721	12	12.7	10	4	3/8-18	15.00	20	8	254
24VC1000	24700	294	10	73	16	863.6	831.9	615	826	16	15.9	13	4	1/2-14	11.25	20	10	254
28VC1000	34400	294	10	73	16	965.2	933.5	717	927	16	15.9	13	4	1/2-14	11.25	20	10	254
32VC1000	46900	295	10	73	16	1114.4	1082.7	818	1070	24	15.9	13	4	1/2-14	7.50	21	12	254
38VC1200	76800	349	12	79	18	1254.1	1216.0	971	1219	20	19.1	16	4	3/4-14	9.00	22	12	305
42VC1200	92500	349	12	79	17	1362.1	1324.0	1072	1327	24	19.1	16	4	3/4-14	7.50	22	14	305
46VC1200	107000	349	14	124	20	1530.4	1485.9	1175	1461	24	22.2	16	4	3/4-14	7.50	22	16	305
52VC1200	137000	362	14	181	29	1701.8	1663.7	1327	1651	32	22.2	22	4	1-11 1/2	5.63	29	18	305
51VC1600	182000	464	14	232	29	1701.8	1663.7	1302	1651	32	22.2	22	4	1-11 1/2	5.63	29	18	406
60VC1600	247000	470	15	235	35	1955.8	1905.0	1535	1886	36	25.4	22	4	1-11 1/2	5.00	32	20	406
66VC1600	316000	470	20	235	35	2085.9	2022.5	1682	1991	40	33.3	22	4	1-11 1/2	5.00	32	22	406
公制SI	N.m @ 5.2bar	单位为毫米 Dimensions in millimeters																

12VC1000、76VC1600、76VC2000资料修订中。 The parameters of 12VC1000、76VC1600、76VC2000 is under revision.

技术参数 Technical Parameter

型号 Size	扭矩 Torque Rating	最大转速 Maximum Speed	离心力损失系数 Centrifugal Loss Constant	转动惯量 Moment of Inertia	重量 Weight	摩擦面积 Friction Area	摩擦片厚度 Friction Lining Thickness 新New	摩擦片厚度 Friction Lining Thickness 旧Worn	气胎容积 Air Tube Cavity	轮毂最小直径 Minimum Drum Diameter
14VC1000	9610	1800	1.52E-06	5.33	96	2258	8	4	3.03	353
16VC1000	12900	1400	1.86E-06	8.90	109	3032	8	4	4.18	404
20VC1000	18200	1300	2.55E-06	12.98	128	4096	8	4	5.08	505
24VC1000	24700	1250	3.17E-06	23.18	171	4644	11	4	7.63	606
28VC1000	34400	1100	3.80E-06	34.69	195	5418	11	4	8.69	706
32VC1000	46900	1050	4.35E-06	65.94	283	6192	14	10	9.84	808
38VC1200	76800	740	5.66E-06	97.86	310	8772	14	10	12.4	960
42VC1200	92500	670	5.93E-06	154.10	405	9675	14	10	13.9	1060
46VC1200	107000	600	7.45E-06	202.90	444	9097	17	10	19.8	1162
52VC1200	137000	550	8.76E-06	306.00	594	10256	17	10	24.8	1314
51VC1600	182000	550	8.63E-06	444.40	830	15351	17	8	32.8	1289
60VC1600	247000	520	10.01E-06	852.30	1077	18060	17	8	38.5	1518
66VC1600	316000	480	12.83E-06	1044.00	1191	19866	17	8	32.1	1670
公制SI	N.m @ 5.2bar	rpm	bar/rpm²	kg . m²	kg	cm²	mm		dm³	mm

7 双列宽型VC
Dual Wide VC Clutch 14VC to 76VC



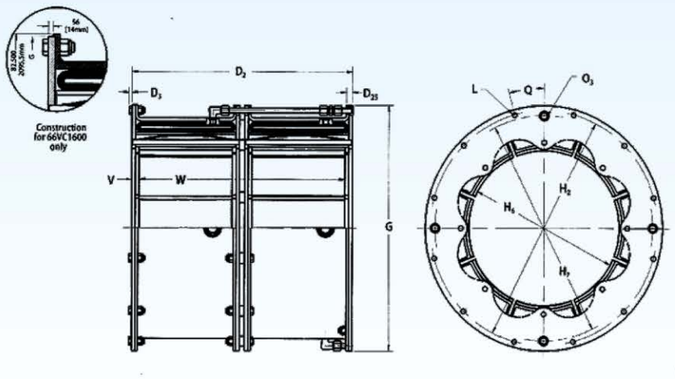

型号尺寸 Dimensions Data

型号 Size	扭矩 Torque Rating	D_2	D_3	D_{25}	G	H_2	H_6	H_7	L 螺栓 (Bolt) 数量 No.	L 螺栓 (Bolt) 直径 Diameter	O_3 数量 No.	O_3 尺寸Size	Q 度(Deg)	V	W 数量No.	W 宽度Width
16VC1000	25800	602	8	16	647.7	619.1	412	619	12	12.7	4	10	15.00	20	16	562
20VC1000	36400	602	8	16	749.3	720.7	514	721	12	12.7	4	10	15.00	20	16	562
24VC1000	49500	602	10	16	863.6	831.9	615	826	16	15.9	4	13	11.25	20	20	562
28VC1000	66900	602	10	16	965.2	933.5	717	927	16	15.9	4	13	11.25	20	20	562
32VC1000	93800	605	10	16	1114.4	1082.7	818	1070	24	15.9	4	13	7.50	21	24	589
38VC1200	154000	713	12	17	1254.1	1216.0	971	1219	20	19.1	4	16	9.00	22	24	668
42VC1200	185000	713	12	17	1362.1	1324.0	1072	1327	24	19.1	4	16	7.50	22	28	668
46VC1200	215000	713	14	19	1530.4	1485.9	1175	1461	24	22.2	4	16	7.50	22	32	668
52VC1200	275000	738	14	29	1701.8	1663.7	1327	1651	32	22.2	4	22	5.63	29	36	681
51VC1600	364000	941	14	29	1701.8	1663.7	1302	1651	32	22.2	4	22	5.63	29	36	884
60VC1600	493000	954	15	35	1955.8	1905.0	1535	1886	36	25.4	4	22	5.00	32	40	891
66VC1600	633000	940	20	29	2085.9	2022.5	1682	1991	40	33.3	4	22	4.50	29	44	876
公制SI	N.m @ 5.2bar	单位为毫米 Dimensions in millimeters														

技术参数 Technical Parameter

型号 Size	扭矩 Torque Rating	最大转速 Maximum Speed	离心力损失系数 Centrifugal Loss Constant	转动惯量 Moment of Inertia	重量 Weight	摩擦面积 Friction Area	摩擦片厚度 Friction Lining Thickness 新New	摩擦片厚度 Friction Lining Thickness 旧Worn	气胎容积 Air Tube Cavity	轮毂最小直径 Minimum Drum Diameter
16VC1000	25800	1400	1.86E-06	15.96	195	6063	8	4	8.36	404
20VC1000	36400	1300	2.55E-06	25.96	257	8192	8	4	10.2	505
24VC1000	49500	1250	3.17E-06	46.37	342	9288	11	4	15.3	606
28VC1000	66900	1100	3.8E-06	69.38	390	10836	11	4	17.4	706
32VC1000	93800	1050	4.35E-06	131.9	565	12384	14	10	19.7	808
38VC1200	154000	740	5.66E-06	195.7	620	17544	14	10	24.8	960
42VC1200	185000	670	5.93E-06	308.3	811	19350	14	10	27.9	1060
46VC1200	215000	600	7.45E-06	405.7	888	21156	17	10	39.5	1162
52VC1200	275000	550	8.76E-06	611.9	1080	20511	17	10	49.5	1314
51VC1600	364000	550	8.63E-06	888.7	1752	30702	17	8	65.6	1289
60VC1600	493000	520	10.01E-06	1725	2220	36120	17	8	77.1	1518
66VC1600	633000	480	12.83E-06	2087	2383	39732	17	8	64.3	1670
公制SI	N.m @ 5.2bar	rpm	bar/rpm²	kg . m²	kg	cm²	mm		dm³	mm

8 单列单法兰CB
SIngle Row Single Flange CB 3CB to 14CB



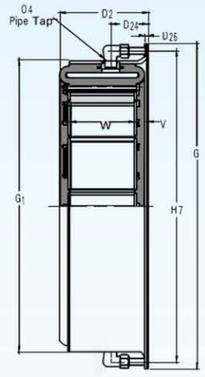

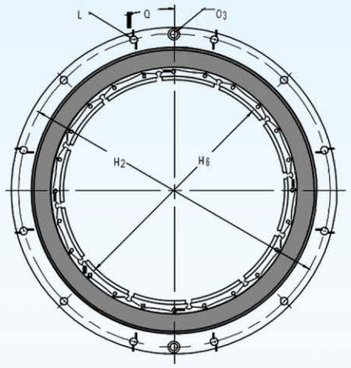

型号尺寸 Dimensions Data

型号 Size	扭矩 Torque Rating	D_2	D_{24}	D_{25}	G	G_1	H_2	H_6	H_7	L 螺栓 (Bolt) 数量 No.	L 螺栓 (Bolt) 尺寸Size	O_3	O_4	Q 度(Deg)	V	W 数量No.	W 宽度Width
3CB150	40.7	55	30	2	160.0	123	146.0	80	146	8	6	7	1/8-27	22.500	9	6	38
4CB200	113	67	35	2	184.1	148	169.9	105	170	8	6	5	1/8-27	22.500	10	6	51
5CB200	165	72	38	2	224.0	183	205.0	131	205	8	8	7	1/8-27	22.500	12	6	51
6CB200	231	75	40	2	273.1	230	254.0	156	254	8	10	8	3/8-18	22.500	14	6	51
8CB250	485	87	48	2	327.0	284	308.0	207	308	8	10	8	3/8-18	22.500	14	8	64
10CB300	921	105	51	5	390.5	346	371.5	257	371	12	10	8	3/8-18	15.000	17	10	76
12CB350	1500	120	51	5	447.7	403	428.6	308	429	14	10	8	3/8-18	12.857	17	12	89
14CB400	2230	133	51	5	498.5	454	479.4	359	479	16	10	8	3/8-18	11.250	17	14	102
公制SI	N.m @5.2bar	单位为毫米 Dimensions in millimeters															

技术参数 Technical Parameter

型号 Size	扭矩 Torque Rating	最大转速 Maximum Speed	离心力损失系数 Centrifugal Loss Constant	转动惯量 Moment of Inertia	重量 Weight	摩擦面积 Friction Area	摩擦片厚度 Friction Lining Thickness 新New	摩擦片厚度 Friction Lining Thickness 旧Worn	气胎容积 Air Tube Cavity	轮毂最小直径 Minimum Drum Diameter
3CB150	40.7	2000	0.10 E-06	0.00	0.8	90.3	5	1	0.12	74
4CB200	113	2000	0.12 E-06	0.01	1.1	148.4	3	1	0.17	99
5CB200	165	2000	0.14 E-06	0.02	1.6	193.5	5	1	0.28	124
6CB200	231	1800	0.41 E-06	0.04	3.2	232.2	4	2	0.32	150
8CB250	485	1800	0.48 E-06	0.08	4.1	393.5	3	2	0.49	201
10CB300	921	1800	0.69 E-06	0.25	8.6	587.0	5	2	0.82	251
12CB350	1500	1800	0.83 E-06	0.46	12	825.6	5	2	1.31	302
14CB400	2230	1800	1.04 E-06	0.71	14	1096.5	5	2	1.15	353
公制SI	N.m @5.2bar	rpm	bar/rpm²	kg.m²	kg	cm²	mm		dm³	mm

9 单列双法兰CB
Single Row Double Flange CB12CB to 45CB



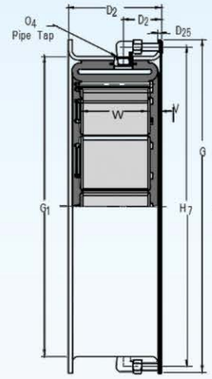

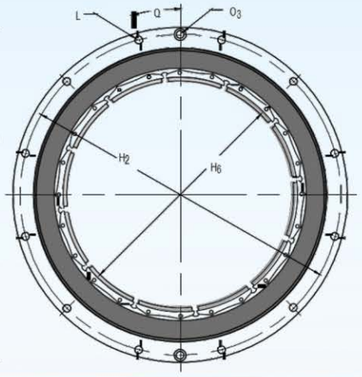

型号尺寸 Dimensions Data

型号 Size	扭矩 Torque Rating	D_2	D_{24}	D_{25}	G_1	G	H_2	H_6	H_7	L 螺栓 (Bolt) 数量 No.	L 螺栓 (Bolt) 尺寸Size	O_3	O_4	Q 度(Deg)	V	W 数量No.	W 宽度Width
12CB350	1500	124	51	5	447.7	403	428.6	308	429	14	10	8	3/8-18	12.857	17	12	89
14CB400	2230	137	51	5	498.5	454	479.4	359	479	16	10	8	3/8-18	11.250	17	14	102
16CB500	3980	168	64	5	596.9	527	571.5	411	565	8	13	10	3/8-18	22.500	21	10	127
18CB500	4970	168	64	5	647.7	578	619.1	462	619	12	13	10	3/8-18	15.000	21	11	127
20CB500	6060	168	64	5	698.5	629	669.9	513	670	12	13	10	3/8-18	15.000	21	12	127
22CB500	7040	168	64	5	749.3	679	720.7	564	721	12	13	10	3/8-18	15.000	21	13	127
24CB500	8480	168	64	5	800.1	730	771.5	614	772	16	13	10	3/8-18	11.250	21	14	127
26CB525	10400	176	64	6	863.6	787	831.9	665	826	16	16	13	1/2-14	11.250	21	16	133
28CB525	12000	176	64	6	914.4	838	882.7	716	876	16	16	13	1/2-14	11.250	21	17	133
30CB525	13700	176	64	6	965.2	889	933.5	767	927	16	16	13	1/2-14	11.250	21	18	133
32CB525	15500	176	64	6	1016.0	940	984.3	818	978	18	16	13	1/2-14	⑤	21	19	133
36CB525	19400	176	70	7	1133.5	1056	1095.4	919	1099	18	19	16	1/2-14	⑤	21	22	133
40CB525	23800	176	70	7	1235.1	1157	1197	1021	1200	20	19	16	3/4-14	9.000	21	24	133
45CB525	29400	176	70	7	1362.1	1287	1324	1148	1327	24	19	16	3/4-14	7.500	21	27	133
公制SI	N.m @5.2bar	单位为毫米 Dimensions in millimeters															

技术参数 Technical Parameter

型号 Size	扭矩 Torque Rating	最大转速 Maximum Speed	离心力损失系数 Centrifugal Loss Constant	转动惯量 Moment of Inertia	重量 Weight	摩擦面积 Friction Area	摩擦片厚度 Friction Lining Thickness 新New	摩擦片厚度 Friction Lining Thickness 旧Worn	气胎容积 Air Tube Cavity	轮毂最小直径 Minimum Drum Diameter
12CB350	1470	1800	0.83 E-06	0.50	14	826	5	2	1.31	302
14CB400	2230	1800	1.04 E-06	0.88	16	1097	5	2	1.15	353
16CB500	3980	1550	1.38 E-06	2.18	34	1554	7	2	2.30	403
18CB500	4970	1400	1.59 E-06	2.94	37	1690	7	2	2.62	454
20CB500	6060	1300	1.73 E-06	3.78	40	1858	7	2	2.79	505
22CB500	7040	1250	1.93 E-06	4.79	43	2012	7	2	3.12	555
24CB500	8480	1200	2.07 E-06	5.96	46	2180	7	2	3.28	606
26CB525	10400	1100	2.35 E-06	8.82	60	2606	8	2	4.26	656
28CB525	12000	1000	2.55 E-06	10.58	63	2774	8	2	4.59	706
30CB525	13700	950	2.76 E-06	12.73	67	2954	8	2	4.76	757
32CB525	15500	900	2.97 E-06	15.08	71	3115	8	2	5.08	808
36CB525	19400	800	3.31 E-06	21.42	81	3548	8	2	5.74	910
40CB525	23800	750	3.59 E-06	30.66	91	3935	8	2	6.23	1011
45CB525	29400	670	4.42 E-06	46.83	119	4354	8	2	7.05	1137
公制SI	N.m @5.2bar	rpm	bar/rpm²	kg.m²	kg	cm²	mm		dm³	mm

10 双列CB
Double Row CB 12CB to 45CB



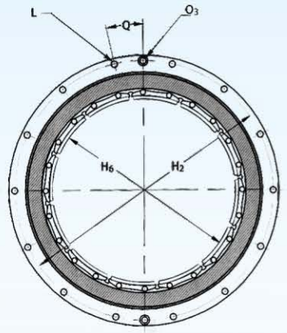

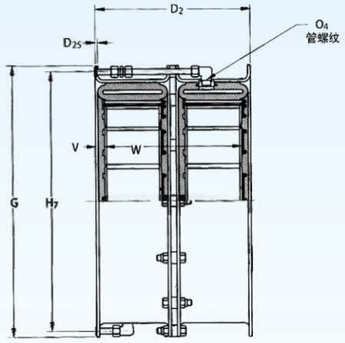

型号尺寸 Dimensions Data

型号 Size	扭矩 Torque Rating	D_2	D_{25}	G	H_2	H_6	H_7	L 螺栓 (Bolt) 数量 No.	L 螺栓 (Bolt) 尺寸Size	O_3	O_4	Q 度(Deg)	V	W 数量No.	W 宽度Width
12CB350	3010	257	5	447.7	428.6	308	429	14	10	8	3/8-18	12.857	17	24	222
14CB400	4450	283	5	498.5	479.4	359	479	16	10	8	3/8-18	11.250	17	28	248
16CB500	7960	346	5	596.9	571.5	411	565	8	13	10	3/8-18	22.500	21	20	305
18CB500	9940	346	5	647.7	619.1	462	619	12	13	10	3/8-18	15.000	21	22	305
20CB500	12100	346	5	698.5	669.9	513	670	12	13	10	3/8-18	15.000	21	24	305
22CB500	14100	346	5	749.3	720.7	564	721	12	13	10	3/8-18	15.000	21	26	305
24CB500	17000	346	5	800.1	771.5	614	772	16	13	10	3/8-18	11.300	21	28	305
26CB525	20900	362	6	863.6	831.9	665	826	16	16	13	1/2-14	11.300	21	32	319
28CB525	24000	367	6	914.4	882.7	716	876	16	16	13	1/2-14	11.300	21	34	322
30CB525	27300	367	6	965.2	933.5	767	927	16	16	13	1/2-14	11.300	21	36	322
32CB525	31000	367	6	1016.0	984.3	818	978	18	16	13	1/2-14	⑤	21	38	322
36CB525	38900	367	6	1133.5	1095.4	919	1099	18	19	16	3/4-14	⑤	21	44	322
40CB525	47700	367	6	1235.1	1197.0	1021	1200	20	19	16	3/4-14	9.000	21	48	322
45CB525	58800	367	7	1362.1	1324.0	1148	1327	24	19	16	3/4-14	7.500	21	54	322
公制 SI	N.m @5.2bar	单位为毫米 Dimensions in millimeters													

技术参数 Technical Parameter

型号 Size	扭矩 Torque Rating	最大转速 Maximum Speed	离心力损失系数 Centrifugal Loss Constant	转动惯量 Moment of Inertia	重量 Weight	摩擦面积 Friction Area	摩擦片厚度 Friction Lining Thickness 新New	摩擦片厚度 Friction Lining Thickness 旧Worn	气胎容积 Air Tube Cavity	轮毂最小直径 Minimum Drum Diameter
12CB350	3010	1800	0.83 E-06	1.05	28	1651	5	2	2.62	302
14CB400	4450	1800	1.04 E-06	1.76	34	2193	5	2	2.3	353
16CB500	7960	1550	1.38 E-06	4.45	68	3109	7	2	4.59	403
18CB500	9940	1400	1.59 E-06	6.05	75	3380	7	2	5.25	454
20CB500	12100	1300	1.73 E-06	7.77	82	3715	7	2	5.58	505
22CB500	14100	1250	1.93 E-06	9.79	88	4025	7	2	6.23	555
24CB500	17000	1200	2.07 E-06	12.26	95	4360	7	2	6.56	606
26CB525	20900	1050	2.35 E-06	18.14	123	5212	8	2	8.53	656
28CB525	24000	1000	2.55 E-06	21.71	130	5547	8	2	9.18	706
30CB525	27300	950	2.76 E-06	26.08	137	5908	8	2	9.51	757
32CB525	31000	900	2.97 E-06	30.91	145	6231	8	2	10.2	808
36CB525	38900	800	3.31 E-06	44.18	166	7095	8	2	11.5	910
40CB525	47700	750	3.59 E-06	63.08	187	7869	8	2	12.5	1011
45CB525	58800	670	4.42 E-06	96.31	243	8708	8	2	14.1	1137
公制 SI	N.m @5.2bar	rpm	bar/rpm²	kg.m²	kg	cm²	mm		dm³	mm

11 矿山气胎离合器
Pneumatic Clutch for Mining

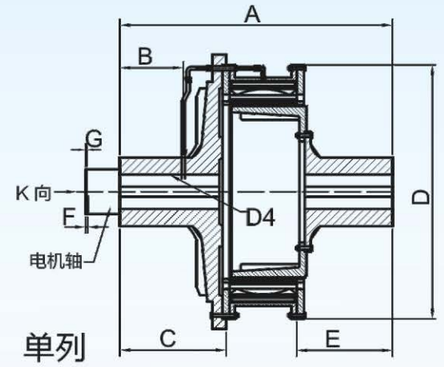

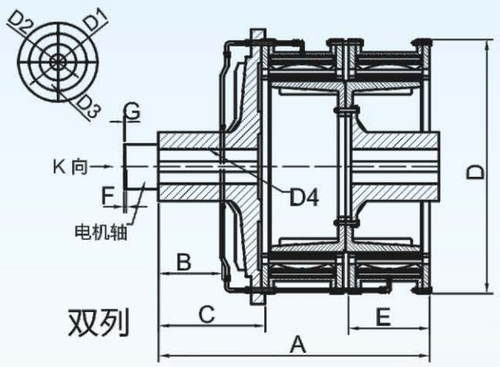

型号尺寸 Dimensions Data

型号Model	A	B	C	D	E	F	G	D_1	D_2	D_3	D_4
DL520-260×1	685	110	250	854	200	25	14	110	80	M10	ZG1/2
DL665-260×1	885	200	350	1000	300	25	14	110	80	M10	ZG1/2
DL875-300×1	1106	250	400	1230	350	25	14	110	80	M10	ZG1/2
DL875-300×2	1270	350	500	1230	380	25	14	110	80	M10	ZG1/2
DL1000-300×1	1106	250	400	1350	350	25	14	110	80	M10	ZG1/2
DL1000-300×2	1430	400	580	1350	460	25	14	110	80	M10	ZG1/2
DL38VC1200	1240	350	470	1270	380	25	14	110	80	M10	ZG3/4
DL42VC1200	1330	350	470	1378	470	25	14	110	80	M10	ZG3/4
DL46VC1200	1440	350	580	1549	470	25	14	110	80	M10	ZG3/4
DL52VC1200	1440	350	580	1721	470	25	14	110	80	M10	ZG3/4
DL51VC1600	1490	350	630	1721	470	25	14	110	80	M10	ZG3/4
DL60VC1600、DL66VC1600、DL76VC1600参数修订中											
The parameters of DL60VC1600、DL66VC1600、DL76VC1600 is under revision.											

注：表中A的尺寸取决于C、E的具体尺寸；B的尺寸按具体通气孔位置而定。
Notes: The measurement of A depend on the specific size of C and E; The measurement of B depend on the position of air vent.

技术参数 Technical Parameter

型号 Model	同步电机额定功率（KW） Synchronizing Motor rated power	0.5Mpa气压下工作扭矩（KN.m） Working Torque under 0.5Mpa	转速（r/min） Rotating speed
DL520-260×1	200-250	23	167
DL665-260×1	300-350	34.1	187.5
DL875-300×1	630-800	63	167
DL875-300×2	1250-1400	125	150
DL1000-300×1	800-1000	102.07	167
DL1000-300×2	1600-2000	200.43	150
DL38VC1200	1500-2000	203.71	150
DL42VC1200	2300-2800	228.15	187.5
DL46VC1200	2500-3000	274.45	167
DL52VC1200	3000-3500	320.20	167
DL51VC1600	3800-4300	393.39	167

能力表 Capability List

规格 Model	摩擦面积Friction area 单列 Single row	摩擦面积Friction area 双列Double row	额定扭矩值KN/m Rated torque 单列 Single row	额定扭矩值KN/m Rated torque 双列Double row
DL520-260	4.525	9.05	23	46
DL665-260	5.43	10.86	31.5	63
DL850-260	6.94	13.88	40	100
DL875-300	8.25	16.5	63	125
DL1000-300	9.425	18.85	102.7	200.43
DL38VC1200	8.1	16.2	103.6	203.71
DL42VC1200	9.45	18.9	115	228.15
DL46VC1200	9.76	19.52	137	274.45
DL52VC1200	10.98	21.96	160	320.2
DL51VC1600	15.35	30.7	197	393.39

12 通风型气胎离合器
Ventilated Pneumatic Clutch

1-钢圈
2-联接盘
3-气胎
4-弹簧片
5-闸瓦
6-弹簧片
7-扭力杆
8-侧板
9-气嘴固定圈

1-steel ring
2-coupling flange
3-pneumatic air tube
4-release spring
5-slipper
6-friction lining
7-torsion bar
8-side panel
9-air cock fixed ring

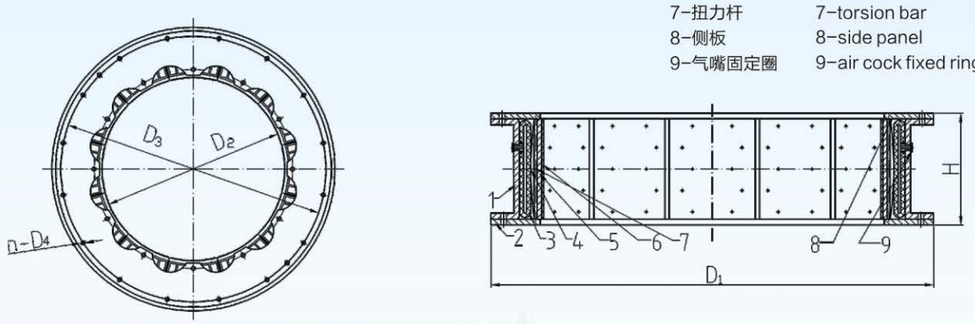

技术参数 Technical Parameter

型号 Model	转速r/min Rotate speed		扭矩N.m Torque		工作压力 Mpa Working pressure	气胎容积L Pneumatic volumetric	摩擦轮直径 D2 mm Friction wheel diameter	联接尺寸 mm Connection size					进气管螺纹 Inlet pipe thread
	极限 Limited	额定 Rated	极限 Limited	额定 Rated				轮缘直径 D1 mm Rim diameter	轮缘宽度 H mm Rim width	定位直径 D3 mm Location diameter	螺孔数量及直径 n-d mm Screw hole quantity and diameter	螺栓孔分布直径 D4 mm Bolt distribute diameter	
LT500/200	1312-1578	758-912	17110-24970	11406-16646	0.7-1.0	3*2	496	780	234	Φ300H8	10-Φ18H10	360	G1/2"
LT500/250	1586-1701	916-983	23390-26900	15590-17930	0.7-0.8	3*5	496	750	288	Φ750F9	12-Φ18H10	720	M20*1.5
LT600/250	1281-1544	740-892	32200-46710	21466-31140	0.7-1.0	4*2	596	890	284	Φ340H8	12-Φ23H10	420	G1/2"
LT700/250	1181-1344	660-793	48200-69910	32100-47300	0.7-1.0	4.2*2	696	1010	292	Φ1000F9	16-Φ22H10	965	G1/2"
DY700/135	1569-1890	907-1092	24560-35360	16170-23750	0.7-1.0	4	696	935	200	Φ935H10	20-Φ18H10	735	M20*1.5
LT800/250	1016-1224	587-707	54240-78660	36160-52440	0.7-1.0	4.66*2	796	1115	300	Φ1105F9	16-Φ22H10	1070	G1/2"
LT900/250	903-1087	522-628	68000-98930	45467-65953	0.7-1.0	3*2	897	1230	292	Φ1220H9	16-Φ22H10	1184	G1/2"
LT1070/200	932-1123	539-668	84600-122670	56400-81790	0.7-1.0	3.0	1065	1400	260	Φ1400H11	16-Φ27H10	1350	M33*1.5
LT1170/250	765-820	442-474	117740-134130	78490-89420	0.7-0.8	5.7	1166	1500	302	Φ1500H10	12-Φ27H10	1445	M33*1.5
LT1120/300	---	---	184500-263250	123000-175500	0.7-1.0	3.96*2	1116	1450	357	Φ840H8	20-Φ23H10	890	G1/2"
LT1250/300	---	---	229500-327000	153000-218000	0.7-1.0	4.4*2	1246	1580	357	Φ1050H8	16-Φ25H10	1110	G1/2"
LT965×305	782-957	452-563	99680-142800	78145-96755	0.7-0.9	6.0	965	1264	358	Φ1254H10	20-Φ21H8	1215	ZG3/4"
LT1168×305	739-890	435-524	108390-147700	88332-99700	0.7-0.9	11	1168	1540	360	Φ1530H10	24-Φ22H8	1486	ZG3/4"

13 普通型气胎离合器
Common Pneumatic Clutch

1-钢圈
2-连接板固定螺钉
3-普通型离合器气囊
4-钢片
5-摩擦片
6-气嘴固定圈

1-steel ring
2-fixing screw on connection board
3-air tube of common type clutch
4-billet steel
5-friction lining
6-air cock fixed ring

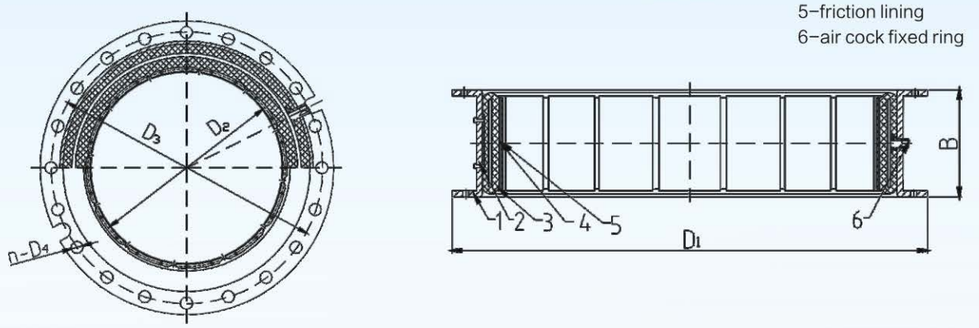

技术参数 Technical Parameter

型号 Model	转速r/min Rotate speed		扭矩N.m Torque		工作压力 Mpa Working pressure	气胎容积L Pneumatic volumetric	摩擦轮直径 D2 mm Friction wheel diameter	联接尺寸 mm Connection size					进气管螺纹 Inlet pipe thread
	极限 Limited	额定 Rated	极限 Limited	额定 Rated				轮缘直径 D1 mm Rim diameter	轮缘宽度 H mm Rim width	定位直径 D3 mm Location diameter	螺孔数量及直径 n-d mm Screw hole quantity and diameter	螺栓孔分布直径 D4 mm Bolt distribute diameter	
LT300/100	2332-2667	1348-1542	3080-4030	2025-2686	0.7-0.8	1.3	296	450	115	450H11	12-Φ13h12	430	M20 1.5
LT400/125	1980-1765	986-1142	7061-10030	6521-8430	0.6-1.0	2	400	600	168	---	---	576	M20×1.5
LT500/125	1642-1877	949-1085	10455-13670	6790-9114	0.7-0.8	5.5	497	720	154	720H11	12-Φ17H12	690	M20×1.5
LT600/125	1652-1547	781-894	14810-19360	9875-12908	0.7-0.9	5.5	597	820	154	820H11	16-Φ17H12	790	M20×1.5
LT700/200	1315-1504	760-869	33080-43270	22060-28850	0.7-0.9	14	695	1000	246	1000H11	12-Φ26H12	950	M33×1.5
CBC700/135	1198-1450	687-881	22350-32660	14900-21775	0.7-1.0	3.7	696	900	176	900H11	20-Φ17H12	870	M20×1.5
LT800/135	1099-1328	635-768	28850-42160	19230-28080	0.7-1.0	4	796	1015	176	1015H11	24-Φ17H12	975	M20×1.5

14 气动离合器控制系统及配件
Control System and Spare Parts for Pneumatic Clutch



气动离合器控制系统
Control System For Pneumatic Clutch



安全阀
Safety Valve



两位三通阀
Tow Three Way Valve



调压阀
Pressure Regulating Valve



快速排气阀
Quick Release Valve



油水过滤器
Oil Filter



流量阀
Flow Valve



旋转密封阀
Rotorseal



本体
Rim



轮毂
Hub



法兰
Flange



侧板
Side Plate



摩擦盘
Friction Disc



压盘
Pressure Plate



闸瓦总成
Brake Shoe



推盘式橡胶气囊
Air Tube For Disc Clutch



VC 橡胶气囊
Air Tube For VC Clutch