广西玉柴装备科技有限公司
GUANGXI YUCHAI EQUIPMENT TECHNOLOGY CO., LTD.

YUCHAI

Guangxi Yuchai Equipment Technology Co.,Ltd.
Address:Yuchai Engineering Machinery Industry Center, Luchuan, Yulin,Guangxi,China
Email: dig@yuchai.com, ychi-export@yuchai.com
Website:www.yuchaicm.com
Tel: +86-775-3223503
Fax:+86-775-3223503

CE EAC ISO9001

产品图册

Yuchai Construction Machinery Products Profile

玉柴装备
微信公众号：YUCHAI-1989

玉柴装备
Facebook

玉柴装备
抖音号：Yuchaizg

玉柴装备产品不断改进，资料和技术如有变更，恕不另行通知。
Specifications are subject to change without prior notice

37+

专注于小型挖掘机领域37年
37 years professional experience in compact construction machinery

YUCHAI

公司简介
COMPANY PROFILE

广西玉柴装备科技有限公司始创于1989年，是广西玉柴机器集团有限公司旗下重要企业，是我国小型挖掘机主要的出口基地，获得“国家级高新技术企业”称号。广西玉柴装备科技有限公司的主导产品有挖掘机、林业设备、旋挖钻机、电动工程机械，同时为客户提供整机及零部件 OEM/ODM 业务。广西玉柴装备科技有限公司的主导产品是通过欧洲权威机构CE认证，得到全球用户的认可。

Guangxi Yuchai Equipment Technology Co., Ltd. (hereinafter referred to as "Yuchai Equipment"), founded in 1989, is a key subsidiary of Guangxi Yuchai Machinery Group Co., Ltd. As China's leading export base for mini excavators, the company has been recognized as a "National High-Tech Enterprise."
Yuchai Equipment specializes in the production of excavators, forestry equipment, rotary drilling rigs, electric construction machinery, and precision parts fabrication, while also offering OEM/ODM services. Its core products are CE-certified and have earned widespread acclaim from global users.

100+
全球销售国家及地区100+
Yuchai excavator has been sold to more than 100 countries

37+
专注于小型挖掘机领域37年
37 years professional experience in compact construction machinery

5.635
注册资本（亿元）
Registered capital
CNY 563.5 Million

500,000
占地面积(m^3)
Plant area(m^3)

250,000+
全球累计销量(台)
Total global sales (Units)

Application Case
客户及应用工况

YUCHAI

YUCHAI

Technical Specification		U10	U17	U18/U20
Basic parameter				
Machine weight	kg	1050	1720	1800(Canopy) | 2000kg(Cabin)
Bucket capacity	m^3	0.02~0.026	0.05	0.05
Width of bucket	mm	356	450	450
Performance parameters				
Engine model		Kubota D722	Kubota D902	Yanmar 3TNV80F
Engine power	kW/rpm	10.2 / 2500	11.8/2300	15.2/2500
Max. Gradeability	°	30	30	30
Max. digging force of arm	kN	5.4	9.5	8.5
Max. digging force of bucket	kN	10.4	17.2	15.5
Traveling speed	km/h	3.0/1.5	2/4	2/4 km/h
Max. hauling force	kN	22.5	22	22
Slewing speed of platform	rpm	7.5~8.5	8.5~10.5	8.5~10.5
Operating parameters				Standard / Longer arm
Max. digging height	mm	3110	3600	3600 /3770
Max. digging depth	mm	2000	2310	2310 /2560
Max. digging radius	mm	3465	3930	4125 /4355
Max. digging radius on ground level	mm	3420	3870	4060 /4300
Max. dumping height	mm	2130	2485	2485 /2655
Min. slewing radius	mm	1365	1500	1690 /1765
Max. vertical digging depth	mm	1030	1920	1920 /2160
Transportation dimensions				
Overall length	mm	2985	3930	3750
Overall width	mm	750	990	1080
Overall height	mm	2290	2340	2335 (Canopy) /2345 (Cabin)
Other Parameters				
Width of undercarriage	mm	750/990	990 / 1240	1080~1400
Length of track	mm	1365	1600	1600
Width of track	mm	180	230	230
Minimum ground clearance	mm	145	150	145
Height between platform and ground	mm	400	450	450
Platform tail turning radius	mm	565	620	700
Length to center of rollers	mm	1040	1230	1230
Fuel tank capacity	L	11	16	23
Hydraulic oil tank capacity	L	12	16	20
Track gauge	mm	570/810	760/1010	850 /1170
Working Pressure	Mpa	P1=P2=17.2	24	24
Flow rate	L/Min	P1=P2=10.5	64.4	61.6
Arm length （standard/longer）	mm	900	950	950/1200
Boom length	mm	1450	1828	1828
Steering head angle		55°(L)/55°(R)	60°(L)/55°(R)	60°(L)/70°(R)

YUCHAI

Technical Specification		U27	U35
Basic parameter			
Machine weight	kg	2600 (Canopy)/2740 (Cabin)	3860
Bucket capacity	m^3	0.09	0.12
Width of bucket	mm	510	550
Performance parameters			
Engine model		Yanmar 3TNV80F	Yanmar 3TNV88 | 3TNV88F
Engine power	kW/rpm	15.2/2500	20.4/2200 | 18.2/2200
Max. Gradeability	°	30	35
Max. digging force of arm	kN	14.4	25.78
Max. digging force of bucket	kN	23.1	32.67
Traveling speed	km/h	4.2/2.3	3.1/4.8
Max. hauling force	kN	26	29
Slewing speed of platform	rpm	10~12	11~13
Operating parameters		Standard / Longer arm	Standard / longer arm
Max. digging height	mm	4170 / 4260	5156/5273
Max. digging depth	mm	2540 / 2680	3170/3398
Max. digging radius	mm	4520 / 4660	5557/5703
Max. digging radius on ground level	mm	4400 / 4540	5438/5584
Max. dumping height	mm	2780 / 2870	3588/3698
Min. slewing radius	mm	1950 / 1990	2260/2287
Max. vertical digging depth	mm	2240 / 2260	2620/2792
Transportation dimensions			
Overall length	mm	4110 / 4120	4853/4863
Overall width	mm	1500	1800
Overall height	mm	2490(Canopy) / 2530 (Cabin)	2575
Other Parameters			
Width of undercarriage	mm	1500	1800
Length of track	mm	2040	2093
Width of track	mm	250	300
Minimum ground clearance	mm	320	347
Height between platform and ground	mm	525	572
Platform tail turning radius	mm	750	1014
Length to center of rollers	mm	1590	1620
Fuel tank capacity	L	30	52
Hydraulic oil tank capacity	L	25	40
Track gauge	mm	1250	1500
Working Pressure	Mpa	24	24
Flow rate	L/Min	61.6	90
Arm length （standard/longer）	mm	1150 /1300	1400 /1550
Boom length	mm	2020	2500
Steering head angle		47°(L)/74°(R)	65.5°(L)/53.7°(R)

Specifications are subject to change without prior notice.

YUCHAI

Technical Specification		U60	YC60	Y90-2PB | Y86
Basic parameter				Y90-2PB | Y86
Machine weight	kg	5600/5640	5700	9500 | 8900
Bucket capacity	m^3	0.18	0.21	0.28
Width of bucket	mm	700	742	800
Performance parameters				
Engine model		Kubota V2403 | V2607	Kubota V2607	Yanmar 4TNV98CT-VSY
Engine power	kW/rpm	30.7/2200 | 35/2200	35/2200 | 35.5/2200	53.7/2100
Max. Gradeability	°	35	35	30°
Max. digging force of arm	kN	26	27.5	41 | 46.4
Max. digging force of bucket	kN	45	36.6	70
Traveling speed	km/h	3.6/2.2	3.6/2.2	2.7/4.8
Max. hauling force	kN	53.8	46.5	76
Slewing speed of platform	rpm	8~10	9~11	10.5
Operating parameters		Standard / Longer arm		Y90-2PB | Y86
Max. digging height	mm	5670 / 5825	5740	8300 | 7085
Max. digging depth	mm	3635/ 3885	3720	4600 | 4260
Max. digging radius	mm	6190 / 6335	6100	7870 | 7050
Max. digging radius on ground level	mm	6055 / 6200	5980	7715 | 6880
Max. dumping height	mm	4015 / 4180	4040	6155 | 5030
Min. slewing radius	mm	2550 / 2600	2210	2450 | 2415
Max. vertical digging depth	mm	2985 / 3545	2750	3880 | 2955
Transportation dimension				Y90-2PB | Y86
Overall length	mm	5545	5690	6945 | 6440
Overall width	mm	1960	1943	2200
Overall height	mm	2550	2565	2540
Other Parameters				Y90-2PB | Y86
Width of undercarriage	mm	1960	1865	2200
Length of track	mm	2500	2494	2870
Width of track	mm	400	400	450
Minimum ground clearance	mm	310	316	370
Height between platform and ground	mm	625	670	755
Platform tail turning radius	mm	1065	1520	1510 | 1560
Length to center of rollers	mm	1990	1960	1750
Fuel tank capacity	L	73	103	115
Hydraulic oil tank capacity	L	70	74	90
Track gauge	mm	1560	1520	2280
Working Pressure	Mpa	27.5	24	29.4
Flow rate	L/Min	158.4	128.5	230
Arm length （standard/longer）	mm	1635/1885	1700	2100 | 1750
Boom length	mm	2795	2900	Boom 1: 2183 + Boom 2: 2028(Y90-2PB) 3520(Y86)
Steering head angle		70°(L)/53°(R)	70°(L)/55°(R)	70°(L) /60°(R)

YUCHAI

Technical Specification		YC135	YC210 | YC215
Basic parameter			
Machine weight	kg	14580 (with dozer blade)	22000 | 22300
Bucket capacity	m^3	0.52	1.0
Width of bucket	mm	1034	1285
Performance parameters			
Engine model		Yuchai YCF36	Yuchai YCA05
Engine power	kW/rpm	90/2200	129 / 2200
Max. Gradeability	°	35	35
Max. digging force of arm	kN	75.8	98.6
Max. digging force of bucket	kN	106	141.5
Traveling speed	km/h	3.1/5.0	3.0/5.0
Max. hauling force	kN	121	201
Slewing speed of platform	rpm	10~13	10~13
Operating parameters			
Max. digging height	mm	8335	10042
Max. digging depth	mm	4822	7210
Max. digging radius	mm	8070	9935
Max. digging radius on ground level	mm	7933	9756
Max. dumping height	mm	5896	7210
Min. slewing radius	mm	2474	3058
Max. vertical digging depth	mm	4069	5953
Transportation dimension			
Overall length	mm	7768	9620
Overall width	mm	2550(optional) / 2635	2540 | 2990
Overall height	mm	2858	3254
Other Parameters			
Width of undercarriage	mm	2600	2540 | 2990
Length of track	mm	3689	4550
Width of track	mm	500(optional) /600	500 | 600
Minimum ground clearance	mm	442	485
Height between platform and ground	mm	934	1070
Platform tail turning radius	mm	2273	2870
Length to center of rollers	mm	2000	3655
Fuel tank capacity	L	270	370 | 430
Hydraulic oil tank capacity	L	105	195 | 200
Track gauge	mm	2944	2040 | 2390
Working Pressure	Mpa	34.3	35.2
Flow rate	L/Min	235	217×2+19.5
Arm length （standard/longer）	mm	2250	3748
Boom length	mm	4600	5700
Steering head angle			

Specifications are subject to change without prior notice.

S35Pro/S35Max-Electric Skid Steer Loader

The Yuchai S35Pro/S35Max electric skid steer loader features with Industry's first wheel side motor driving and Auto Hold technology, ensuring stability, reliability, and safety. Its compact design and excellent maneuverability make it ideal for extremely narrow spaces, easily navigating corridors, aisles, alleys, and low-height areas. It can be equipped with various attachments for functions such as loading, sweeping, and crushing.

S35 Max Long-Endurance Version: Can continuously operate for 9-11 hours at full battery, supporting both fast charging and slow charging modes.

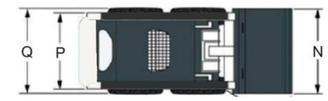

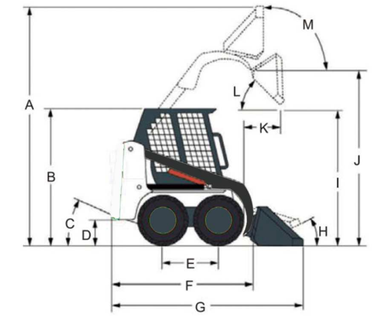

Performance Parameters

Basic parameter		S35Pro	S35Max
Machine Weight	kg	1540	1620
Bucket capacity	m^3	0.29	0.29
Bucket width	mm	1126	1126
Technical Specification			
Battery		Lithium Iron Phosphate	Lithium Iron Phosphate
Rated power	kW/rpm	9/3150+4×2/3500	9/3150+4×2/3500
Max. torque/speed	N·m/rpm	70N·m/1500+4×36.8N·m/995 rpm	70N·m/1500+4×36.8N·m/995 rpm
Battery capacity	kW·h	21.29	29.17
Rated Operating Load	kg	350	350
Tipping Load	kg	680	680
System working pressure	MPa	20.5	20.5
Flow Rate	L/min	33.7	33.7
Increase maximum digging force	kN	8	8
Tipping	kN	9	9
Max. travel speed(low gear)	km/h	0～10.5	0～10.5
Fast charge		1 hour Charging from 30% to 80%	1 hour Charging from 30% to 80%
Endurance	h	6~8	9~11
Drive System			
Wheel side motor driving			
Wheel side Auto Hold			
Operating parameter			
A Overall operating height	mm	3245	3245
B Height to top of cab	mm	1815	1815
C Dumping angle at maximum height	°	25/22	25/22
D Ground clearance	mm	141	141
E Wheelbase	mm	722	722
F Overall length without standard bucket	mm	1952	1952
G Overall length with standard bucket	mm	2682	2682
H Maximum angle of flat ground	°	22	22
I Unloading height	mm	1850	1850
J Height to bucket hinge pin	mm	2410	2410
K Loading distance at Max. unloading height	mm	545	545
L Dumping angle at maximum height	°	34	34
M Rollback of bucket at full height	°	97	97
N Bucket width	mm	1126	1126
O Radius of gyration	mm	1650	1650
P Track width	mm	756	756
Q Machine width	mm	959	959

*According to Yuchai Equipment standard testing conditions.

Specifications are subject to change without prior notice.

S90-Electric Skid Steer Loader

The Yuchai S90 electric skid steer loader adopts the global first wheel side motor driving， wheel side AUTO-HOLD technology and integrated chassis. It is together with features compact size, good trafficability, large operating range and comfortable driving experience, intelligent electronic control, green and environmentally friendly, low-failure rate and low-use cost. S90 supports fast charging function. By 1-hour fast charging, it can work for 9-10 hours. It can be used with a variety of attachments and can be widely used suitable for farms, forest farms, urban infrastructure, roads or construction sites, factories, and workshops, etc.

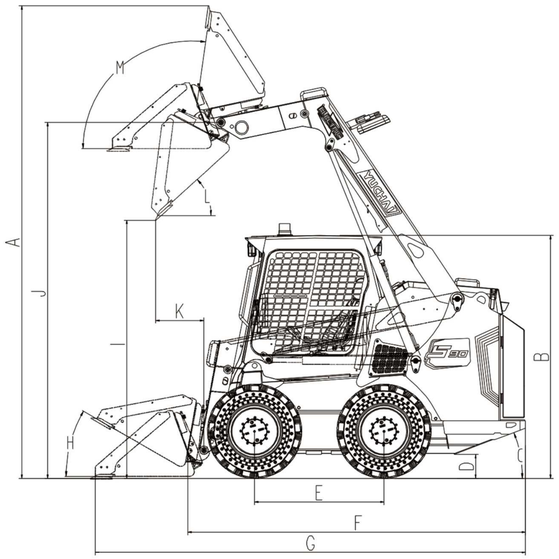

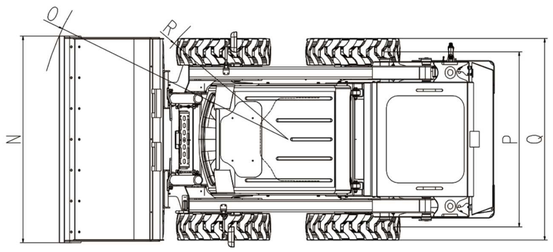

S90-Performance Parameters

Basic parameter		
Machine Weight	3900	kg
Bucket capacity	0.46	m^3
Bucket width	1727	mm
Technical Specification		
Battery	Lithium Iron Phosphate	
Rated power	32/3180+4×8/3500	kW/rpm
Battery capacity	105	kWh
Rated Operating Load	910	kg
Tipping Load	1820	kg
System working pressure	23 (0~+0.5)	MPa
Flow Rate	87.1+51.1	L/min
Max. Arm Digging Force	19	kN
Max. Bucket Digging Force	18.5	kN
Max. travel speed(low gear/ high gear)	10/17.3	km/h
Fast charge	1 Hour Charging from 30% to 80%	
Endurance*	9-10	h
Drive System		
4-Wheel independent direct driving by electric motor		
Operating parameter		
A Overall operating height	3920	mm
B Height to top of cab	2030	mm
C Dumping angle at maximum height	21	°
D Ground clearance	203	mm
E Wheelbase	1082	mm
F Overall length without standard bucket	2810	mm
G Overall length with standard bucket	3590	mm
H Maximum angle of flat ground	30	°
I Unloading height	2170	mm
J Height to bucket hinge pin	2960	mm
K Loading distance at Max. unloading height	400	mm
L Dumping angle at maximum height	42	°
M Rollback of bucket at full height	98	°
N Bucket width	1727	mm
O Radius of gyration	2100	mm
P Track width	1455	mm
Q Machine width	1685	mm

*According to Yuchai Equipment standard testing conditions.

Specifications are subject to change without prior notice.

S150-Electric Skid Steer Loader

The Yuchai S150 electric skid steer loader adopts the global first wheel side motor driving， wheel side AUTO-HOLD technology and integrated chassis. It is together with features compact size, good trafficability, large operating range and comfortable driving experience, intelligent electronic control, green and environmentally friendly, low-failure rate and low-use cost. S150 supports fast charging function. By 1-hour fast charging, it can work for 9-10 hours. It can be used with a variety of attachments and can be widely used suitable for farms, forest farms, urban infrastructure, roads or construction sites, factories, and workshops, etc.

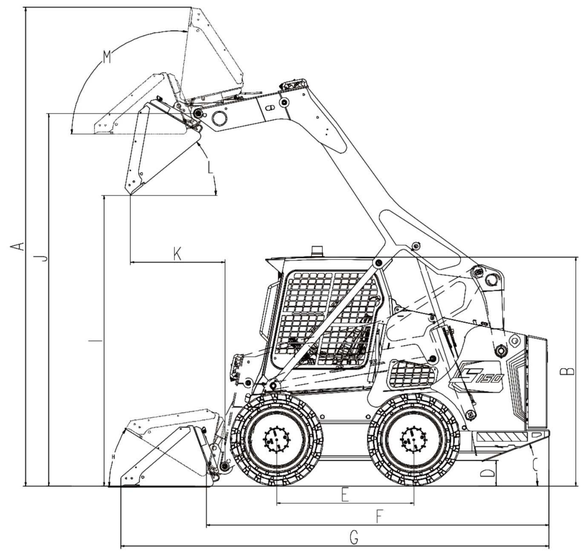

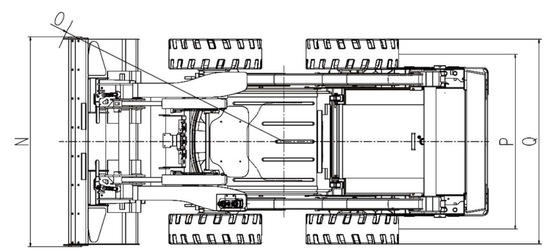

S150-Performance Parameters

Basic parameter		
Machine Weight	4950	kg
Bucket capacity	0.5	m^3
Bucket width	1880	mm
Technical Specification		
Battery	Lithium Iron Phosphate	
Rated power	32/3180+4×10/3410	kW/rpm
Battery capacity	105	kWh
Rated Operating Load	1620	kg
Tipping Load	3100	kg
System working pressure	23 (0~+0.5)	MPa
Flow Rate	87.1+51.1	L/min
Max. Arm Digging Force	25	kN
Max. Bucket Digging Force	24.5	kN
Max. travel speed(low gear/ high gear)	10/20	km/h
Fast charge	1 Hour Charging from 30% to 80%	
Endurance*	9-10	h
Drive System		
4-Wheel independent direct driving by electric motor		
Operating parameter		
A Overall operating height	4280	mm
B Height to top of cab	2065	mm
C Dumping angle at maximum height	21.5	°
D Ground clearance	207	mm
E Wheelbase	1227	mm
F Overall length without standard bucket	3066	mm
G Overall length with standard bucket	3830	mm
H Maximum angle of flat ground	31	°
I Unloading height	2610	mm
J Height to bucket hinge pin	3335	mm
K Loading distance at Max. unloading height	845	mm
L Dumping angle at maximum height	41	°
M Rollback of bucket at full height	98	°
N Bucket width	1880	mm
O Radius of gyration	2179	mm
P Track width	1507	mm
Q Machine width	1832	mm

*According to Yuchai Equipment standard testing conditions.

Specifications are subject to change without prior notice.

YUCHAI

Battery capacity increased by 40%
Wheel side motor driving
Wheel side AUTO HOLD
Traction force increased by 18.8%
Operation stability increased by 7.5%
Battery life increased by 50%
360° rotation function in place

Saving 91% on fuel costs
Zero maintenance during 2000 hours
Low failure rate

Yuchai A1800E Electric Wheel Loader

The Yuchai A1800E electric wheel loader is a compact equipment developed by Yuchai Equipment. It features wheel side motor design , full-time four-wheel drive, stable quality, safety, reliability, intelligent electric control, green and environmentally friendly operation, low failure rate, and low operating costs. With a quick charging time of 1.5 hours and a working duration of 6-8 hours, its small and agile design, excellent terrain traversal capability, and versatility make it suitable for various tasks, including loading, cleaning, and crushing forking etc.

YUCHAI

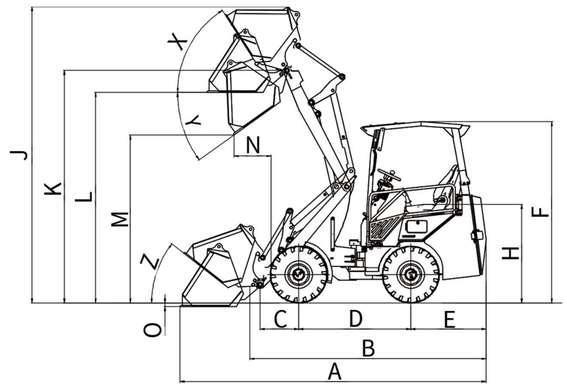

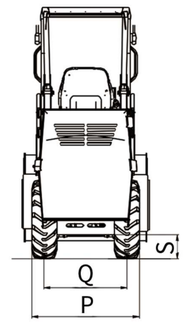

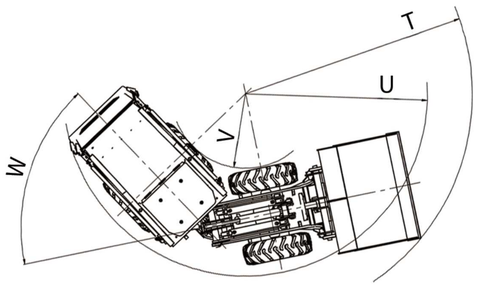

A1800E Performance Parameters

Basic parameter		
Machine Weight	1880	kg
Tipping load with bucket-straight machine	800	kg
Tipping load with bucket-pivoted machine	500	kg
Tipping load with pallet fork-straight machine	520	kg
Tipping load with pallet fork pivoted machine	320	kg
Max.traveling speed	0-15	km/h
Hydraulic System		
Pure electric control		
Working pressure	18	Mpa
Battery System		
Battery	Lithium Lron phosphate	
Standard endurance *	⩾6	h
Drive System		
Wheel side motor driving		
Wheel side Auto Hold		
Operating parameter		
A Overall Length	3850	mm
B Overall Length (Without bucket)	3000	mm
C Axle middle to Bucket Pin	461	mm
D Wheelbase	1345	mm
E Rear Overhang	904	mm
F Overall Height	2138	mm
H Seat Height	1178	mm
J Overall Operating Height	3547	mm
K Height of Bucket Pivot (Max.)	2781	mm
L Loading-Over Height	2518	mm
M Dumping Height	2007	mm
N Bucket to Front Wheel Distance (Dumping)	447	mm
O Digging Depth	55	mm
P Overall Width (Wide Tire/Narrow Tire)	1106/930	mm
Q Track Width (Wide Tire/Narrow Tire)	801/740	mm
S Ground Clearance	198	mm
T Min. Radius External	2268	mm
U Radius at the Outer edge	1796	mm
V Inside Turning Radius	653	mm
W Inclination Angle	58	°
X Rollback Angle at Max.Lifting Height	57	°
Y Dumping Angle (Max.)	35	°
Z Rollback Angle (on the ground)	38	°

*According to Yuchai Equipment standard testing conditions.

Specifications are subject to change without prior notice.

YUCHAI

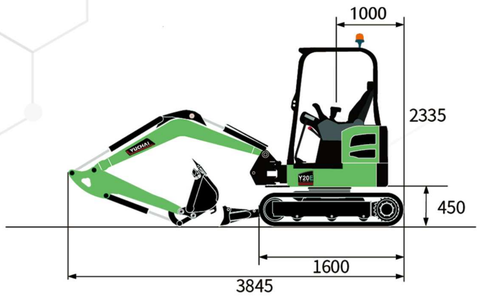

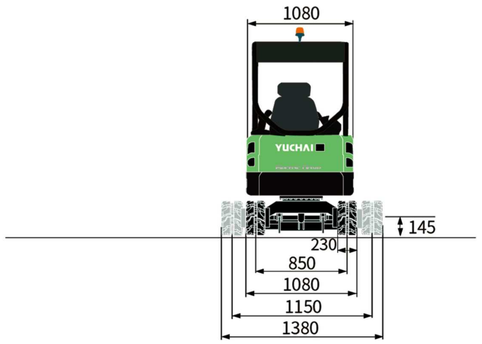

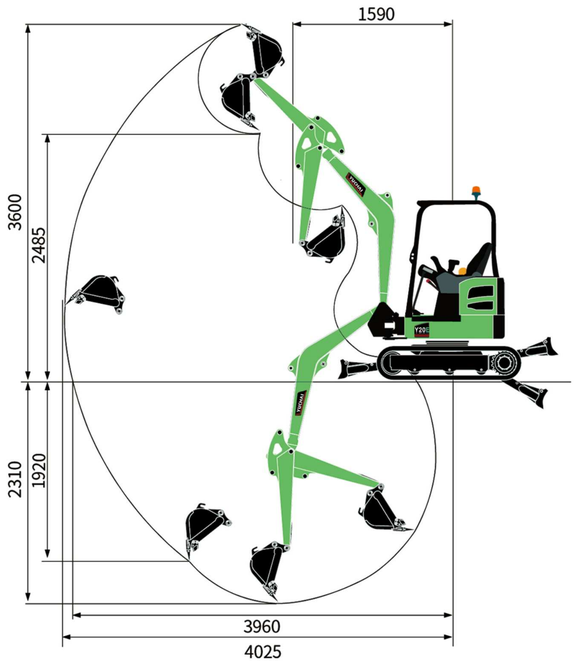

Y20E Technical Specification

Basic parameters	
Machine weight	2080(canopy) /2200 kg(cabin)
Bucket capacity	0.05 m^3
Width of bucket	450mm
Performance parameters	
Battery Lithium Iron	33.38 kWh
Battery voltage/Current	347.76 V / 96 Ah
Motor power	12/25 kW
Standard endurance	6~8 h
Fast charging time	20%→80% in1 hours
Slow charging time	20%→80% in 4~5 hours
Max. gradeability	30 °
Max. digging force of bucket	17.2 kN
Max. digging force of arm	9.5 kN
Traveling speed	2/4 km/h
Max. hauling force	22 kN
Slewing speed of platform	8~10 rpm
Operating parameters	
Max. digging height	3600 mm
Max. digging depth	2310 mm
Max. digging radius	4025 mm
Max. digging radius on ground level	3690 mm
Max. dumping height	2485 mm
Min. slewing radius	1920 mm
Max. vertical digging depth	1590 mm
Transportation dimension	
Overall length	3845 mm
Overall width	1080 mm
Overall height	2335mm(canopy) /2345 mm(cabin)
Other parameters	
Width of undercarriage	1080~1380 mm
Length of track	1600 mm
Width of track	230 mm
Minimum ground clearance	145 mm
Height between platform and ground	450 mm
Platform tail turning radius	1000 mm
Track gauge	850/1150 mm
Hydraulic oil tank capacity	17 L
working pressure	24 MPa
Flow rate	61.6 L/min
AUX 1 Pressure / Flow rate	24 MPa / 18 /10 L/min
AUX 2 Pressure / Flow rate	21 MPa / 36 L/min
Boom length	1828 mm
Arm length (standard/longer)	950 mm
Max. Lift Height of Dozer Blade	245 mm
Steering head angle	65°(L)/55°(R)

Address: Yuchai Engineering Machinery Industry Center, Luchuan, Guangxi,China
Email: dig@yuchai.com,ychi-export@yuchai.com | Website: www.yuchaicm.com
Tel: +86-775-3223503 | Fax: +86-775-3223503

Specifications are subject to change without prior notice .

Facebook

YUCHAI

ELECTRIC EXCAVATOR

Machine weight : 2200 kg (Cabin) | Battery Lithium Iron : 33.38 kWh
20%→80% in 1 hours | Standard endurance: 6~8 h
Overall dimensions (L x W x H): 3845mm x 1080mm x 2345mm

Y20E

YUCHAI

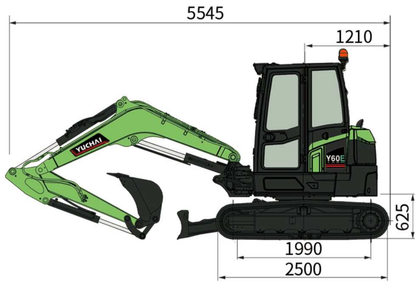

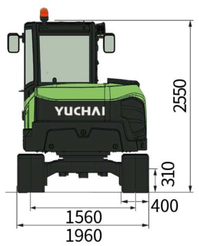

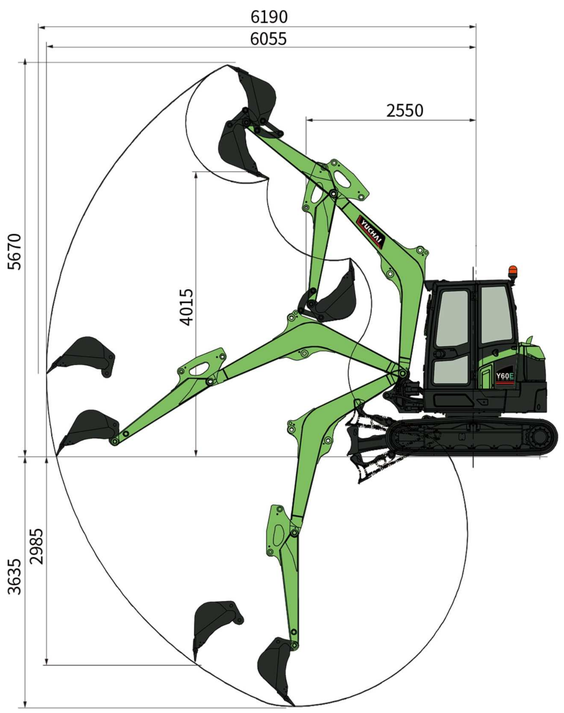

Y60E Technical Specification

Basic parameters	
Machine weight	5950 kg
Bucket capacity	0.18 m^3
Width of bucket	700 mm
Performance parameters	
Battery Lithium Iron	105 kWh
Battery voltage	347.76 V
Motor power	32 kW
Standard endurance	6~8 h
Fast charging time	20%→80% in 1 hours
Slow charging time	20%→80% in 9.5 hours
Max. gradeability	35 °
Max. digging force of bucket	45 kN
Max. digging force of arm	26kN
Traveling speed	3.6/2.2 km/h
Max. hauling force	61.5 kN
Slewing speed of platform	8~10 rpm
Operating parameters	
Max. digging height	5670 mm
Max. digging depth	3635 mm
Max. digging radius	6190 mm
Max. digging radius on ground level	6055 mm
Max. dumping height	4015 mm
Min. slewing radius	2550 mm
Max. vertical digging depth	2985 mm
Transportation dimension	
Overall length	5545 mm
Overall width	1960 mm
Overall height	2550 mm
Other parameters	
Width of undercarriage	1960 mm
Length of track	2500 mm
Width of track	400 mm
Minimum ground clearance	310 mm
Height between platform and ground	625 mm
Platform tail turning radius	1210 mm
Track gauge	1560 mm
Hydraulic oil tank capacity	70 L
working pressure	27.5 MPa
Flow rate	158.4 L/min
AUX 1 Pressure / Flow rate	27.5 MPa / 35 L/min
AUX 2 Pressure / Flow rate	27.5MPa / 110 L/min
Boom length	2795 mm
Arm length (standard/longer)	1635 mm
Maximum Bulldozer Lift	440 mm
Steering head angle	70°(L)/53°(R)

Address: Yuchai Engineering Machinery Industry Center, Luchuan, Guangxi,China
Email: dig@yuchai.com,ychi-export@yuchai.com | Website: www.yuchaicm.com
Tel: +86-775-3223503 | Fax: +86-775-3223503
Specifications are subject to change without prior notice .

Facebook

YUCHAI

ELECTRIC EXCAVATOR

Machine weight : 5950 kg | Battery Lithium Iron : 105 kWh
20%→80% in 1 hours | Standard endurance: 6~8 h
Overall dimensions (L x W x H): 5545mm x 1960mm x 2550 mm

Y60E

Yuchai D170 Electric Remote-Controlled Demolition Robot

The Yuchai D170 electric remote-controlled demolition robot, developed by Yuchai Equipment, is a compact and agile equipment designed for precise operations in narrow spaces. With a body width of 780mm, it can pass through various terrain.

It can operates in wide angel, offering powerful demolition capabilities, high-temperature resistance, remote control functionality, and ensuring safety. Versatile and adaptable, it suits various harsh environments such as construction sites, metallurgical plants, cement factories, tunnels, emergencies, and nuclear industries.

YUCHAI

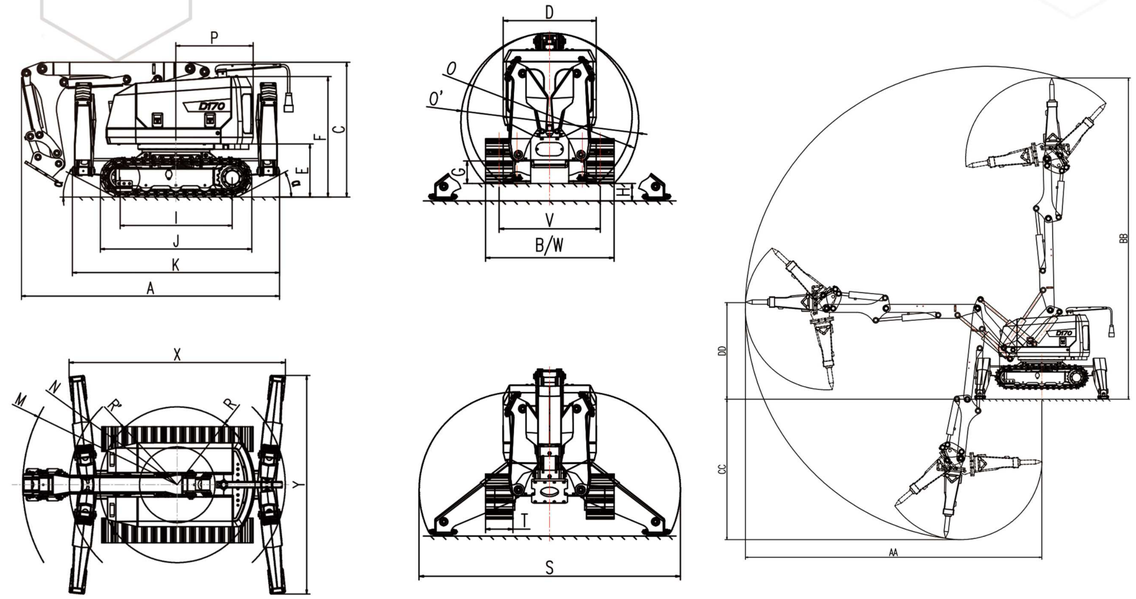

D170 Equipment Parameters

Performance Parameters	
Total Weight (Rubber Tracks)	1850 kg
Total Weight (Steel Tracks/Track Pads/Extension Device /Additional Weight each increased by 50kg)	2050 kg
Rated Power	24 kW/1454 rpm
Voltage/Frequency/Current	380 V/50 Hz/47 A
Max. slewing Speed	6 r/min
Max. Travel Speed	2 km/h
Max.Ground Pressure Ratio	33 kPa
Noise Power (with/without Breaker)	87/118 dB (A)
Max. Cradeability	30° (58%)
Max. Traction Forcet	22 kN
Hydraulic System	Load-Sensitive System
System Rated Flow	65.4 L/min
Standard System Pressure	170 Bar
Reinforced System Pressure	230 Bar
Hydraulic Tank Capacity	32 L
Control Method	Remote Control
Remote Control Distance	300 m (optional)
Control System Voltage	24 V
Hammer Model	SB202
Hammer Weight	200 kg
Standard Drill Rod	Φ65×600 mm
Rated Pressure	100~150 Bar
Rated Flow	35~65 L/min
Impact Frequency	850-1800 bpm

Operating parameter		
A Overall Length	2400	mm
B Overall Width (folded/unfolded leg)	780/1080	mm
C Overall Height	1255	mm
I Ground Length of Tracks	1045	mm
J Track Length	1410	mm
V Track Gauge(folded/unfolded leg)	550/850	mm
W Track Width (folded/unfolded outrigger)	780/1080	mm
T Track Width	230	mm
E Height of Counterweight from Ground	495	mm
F Height of rear panel	1120	mm
G Min. Ground Clearance	190	mm
P Tail Length	720	mm
N Leg Turning Radius	1000	mm
O Machine Passing Diameter	1380/1490	mm
K Machine Length	1930	mm
D Platform Width	780	mm
H Max.Height of Outrigger	145	mm
S Max. Width of Outrigger when Open	2190	mm
X Front and Rear Support Span	2010	mm
Y Left and Right Support Span	2030	mm
α Front/Back Departure Angle	27°	
AA Max. Operating Radius	4450	mm
BB Max. Operating Height	4820	mm
CC Max. Operating Depth	2110	mm
DD Horizontal Operating Height	1450	mm
Platform slewing Angle	360°	

Specifications are subject to change without prior notice.

The market leader of China's logging machinery industry

F60

Yuchai developed the first harvester head of China in 2012. With the continuous investment and technology improvement, Yuchai is the market leader of Chinese forestry equipment. At present, Yuchai has 4 series of F35, F40,F60 and F70 and more than adozen varieties products, which can meet the most of fast-growing forest harvesting jobs. Yuchai harvester head has taken 60% market share in China by its mature technology and reliable quality,and is exported to Russia, Southeast Asia, South America and other countries.Yuchai has more than 36 years' experience of excavator R&D and manufacturing, and deep understanding of characteristics of all brands. Up to now, Yuchai harvester head has successfully matched with morethan 50 models of 20 brands excavator.

Yuchai will continue to promote the R&D and improvement of forestry products, providing high-quality products and services to customers.

Technical Specification		F35IV	F40	F60	F70
Chain saw					
Chainsaw maximum cutting diameter	mm	350	400	640	640
Guide bar length	mm	457.2 (18 in)	580 (20 in)	750 (29.53 in)	750 (29.53 in)
Chain pitch	in	0.404	0.404	0.404	0.404
Capacity of chain oil tank bar	L	3.4	3.4	8	8
Feeding					
Rollers quantity		2	3	3	3
Rollers diameter	mm	371	371	400	400
Max. opening of rollers	mm	400	400	600	600
Max. feed force	kN	16	16	25	30
Max. feed speed	m/s	0~4.1	0~4.1	0~6	0~5
Max.Debarking diameter	mm	250	250	420	500
Optimal tree diameter less than	mm	250	250	420	500
Delimbing knife					
Knives qty		2+1	2+2+1	2+2+1	2+2+1
Diameter tip-to-tip	mm	330	330	400	400
Front knives max. opening	mm	480	480	640	640
Rear knives max. opening	mm	/	510	650	650
Hydraulic requirement					
Operating hydraulic	MPa	25	25	28	28
Flow required	L/min	150~180	150~180	200~250	240~300
Power required	KW	40~60	40~60	85~100	90~130
Operating vodtage	V	24	24	24	24
Control system		Yuchai	Yuchai	Yuchai	Yuchai
Application					
For Excavator	T	8~15	8~15	12~25	20~28
Technical specification					
Width（head closed/head open）	mm	870/1130	870/1215	1500	1500
Length	mm	1140	1290	1445	1550
Height	mm	1100	1263	1530	1565
Weight	Kg	600	680	1050	1200

Specifications are subject to change without prior notice.