www.deretteloader.com

DERETTE

PRODUCT CATALOG

Shandong Derette Machinery Co., Ltd.

CERTIFICATE DISPLAY



Shandong Derette Machinery Co,, Ltd. located at Shanbo Road, Hi-Tech Zone, Jining City, Shandong Province, has a history dating back to 2006 and nearly 20 years of manufacturing experience. Derette is a professional manufacturer providing reliable and durable high-quality agricultural and construction machinery equipment to customers worldwide. Longer sustainable working time and unique design bring a better user experience.



















Overview- Track Type

320T

920Kg(2028Lb)
Operating Weight
13.5 HP
Rated Power



Max. Lifting Force: 320Kg(705Lb)

380T

1030Kg(2271Lb)
Operating Weight
23 HP
Rated Power



Max. Lifting Force: 380Kg(838Lb)

430T

1100Kg(2425Lb)
Operating Weight
23 HP
Rated Power



Max. Lifting Force:430Kg(948Lb)

450T

1160Kg(2557Lb)
Operating Weight
23 HP
Rated Power



Max. Lifting Force:450Kg(992Lb)

T800

870Kg(1918Lb)
Operating Weight
13.5 or 23 HP
Rated Power



Max. Lifting Force: 360Kg(800Lb)

480i

1180Kg(2601Lb)
Operating Weight
23 HP
Rated Power



Max. Lifting Force: 480Kg(1058Lb)

Overview- Track Type

V1000

1538Kg(3391Lb)
Operating Weight

25 HP
Rated Power



Max. Lifting Force:650Kg(1433Lb)

XC1100

1690Kg(3718Lb)
Operating Weight

25 HP
Rated Power



Max. Lifting Force: 750Kg(1650Lb)

Overview- Wheel

320W

840Kg(1852Lb)
Operating Weight

13.5 HP
Rated Power



Max. Lifting Force: 320Kg(705Lb)

320N

840Kg(1852Lb)
Operating Weight

13.5 HP
Rated Pow



Max. Lifting Force:320Kg(705Lb)

380W

1000Kg(2205Lb)
Operating Weight

23 HP
Rated Power



Max. Lifting Force:380Kg(838Lb)

430W

1070Kg(2359Lb)
Operating Weight

23 HP
Rated Power



Max. Lifting Force: 430Kg(948Lb)

450W

1160Kg(2557Lb)
Operating Weight

23 HP
Rated Power



Max. Lifting Force:450Kg(992Lb)

480W

1180Kg(2601Lb)
Operating Weight

23 HP
Rated Power



Max. Lifting Force: 480Kg(1058Lb)

DRT-320T/W
Product Advantages

Operating table **easy to use**

Briggs Stratton EPA 13.5HP engine

2 pumps & 2 valves

Automatic Bucket Leveling

Bucket can be replaced by various attachments

Operating weight 840 kg, lightweight and flexible



Thin wheel version has a total width of **830mm**.



Wide wheel version has a total width of **1050mm**.

DRT-320T/W

Product Parameters

Engine	**Briggs Stratton**
Rated Power	**10KW(13.5HP)**
Fuel tank capacity	**6.6L**
Rotating speed (rpm)	**3600**
Noise (Db)	**≤95**

Item	Metric	U.S.
Bucket Capacity	**0.08 m³**	**3 ft³**
Max Lifting Force	**320 Kg**	**705 Lb**
Travel Speed	**0-6 Km/h**	**0-3.73 mile/h**
Operating Weight	**920 Kg**	**2204.62 Lb**







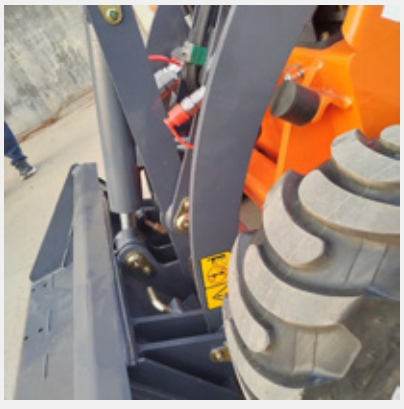

DRT-320T
Product Parameters

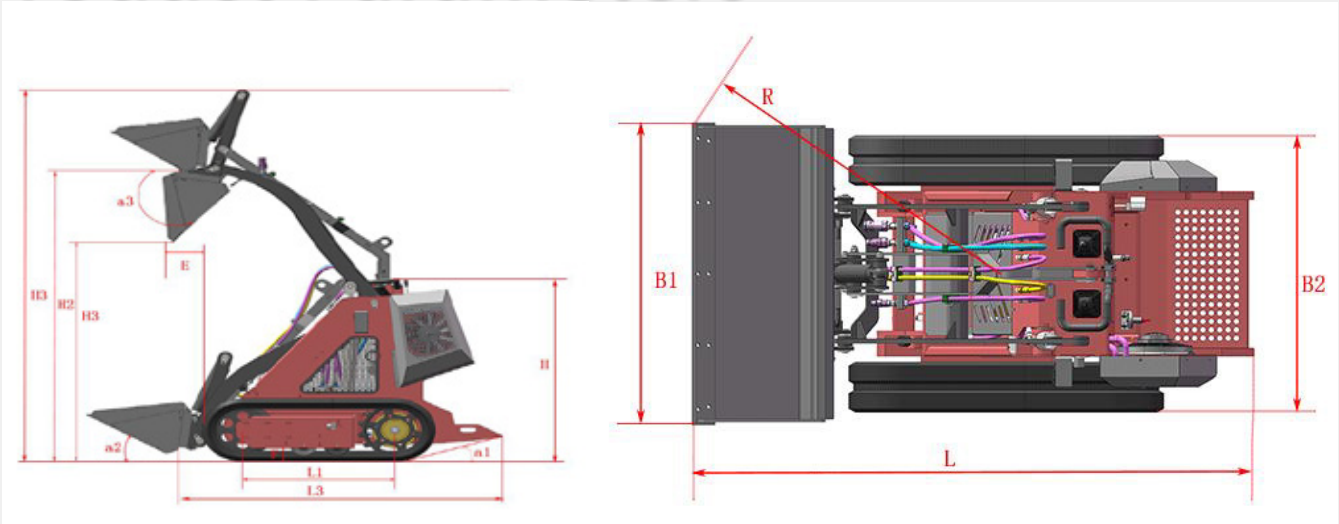

Track Vision	Metric	U.S.
Max working height (H3)	2479 mm	97.59 inch
Max pin height(H2)	1926 mm	75.82 inch
Max Dumping height (H1)	1398 mm	55.03 inch
Max Dumping distance(E)	100 mm	3.94 inch
Max Dumping Angle (a3)	53°	53°
Rollback of bucket on ground (a2)	32°	32°
Departure angle (a1)	18°	18°
Total height (H)	1185 mm	46.65 inch
Ground clearance (F)	120 mm	4.72 inch
Wheel base (L1)	653 mm	25.71 inch
Overall length without bucket (L3)	1552 mm	61.1 inch
Total width (B2)	990 mm	38.97 inch
Bucket width (B1)	1080 mm	42.52 inch
Total length with bucket (L)	1992 mm	78.43 inch
Turn radius forward turning (R)	1205 mm	47.44 inch

DRT-320W
Product Parameters

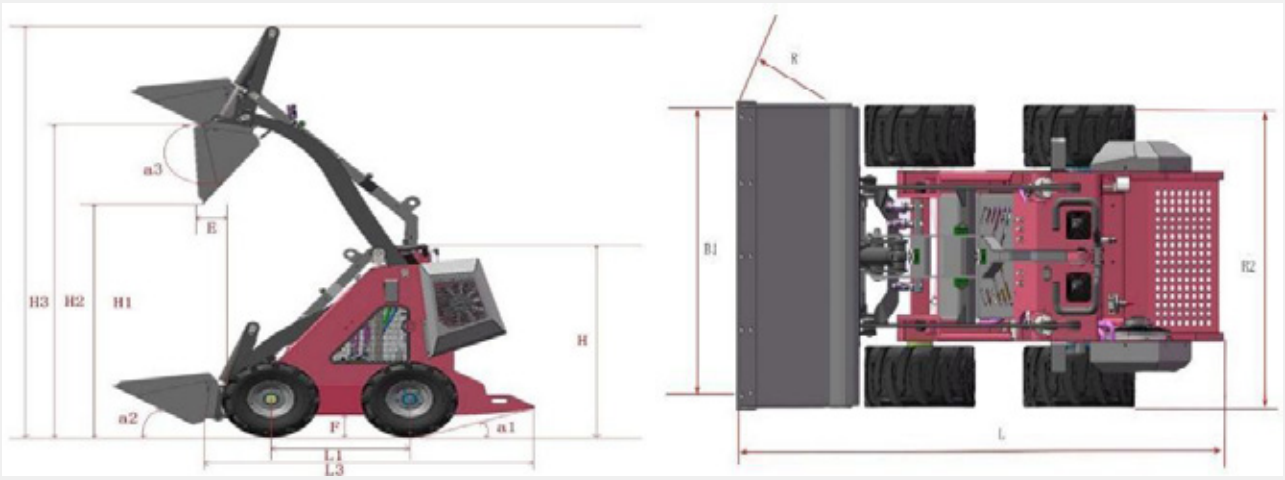

Wheel Vision	Metric	U.S.
Max working height (H3)	2504 mm	98.58 inch
Max pin height(H2)	1951 mm	76.81 inch
Max Dumping height (H1)	1423 mm	56.02 inch
Max Dumping distance(E)	100 mm	3.94 inch
Max Dumping Angle (a3)	53°	53°
Rollback of bucket on ground (a2)	32°	32°
Departure angle (a1)	18°	18°
Total height (H)	1210 mm	47.64 inch
Ground clearance (F)	133.5 mm	5.26 inch
Wheel base (L1)	653 mm	25.71 inch
Overall length without bucket (L3)	1552 mm	61.1 inch
Total width (B2)	830mm/ 1050 mm	32.68inch/41.34 inch
Bucket width (B1)	1080 mm	42.52 inch
Total length with bucket (L)	1992 mm	78.43 inch
Turn radius forward turning (R)	1205 mm	47.44 inch

DRT-380T/W
Product Advantages





Power system, Briggs& Stratton 3864, Rato739, Honda GX690, all with EPA/Euro V/CE certificate.



3 pumps & 3 valves



International standard quick-change plug



Large flow rate, up to 43 L/min



Standing pedal with non-slip design and shock absorption cushion



Full-time drive, 2 high-torque motor



Hydraulic oil temperature sensor control heat dissipation

DRT-380T/W

Product Parameters

Engine Brand	Briggs & Stratton	Honda	Rato
Rated Power (KW)	23HP		
Engine Cooling	Air		
Number of cylinders	2		
Fuel tank capacity	20L		
Rotating speed (rpm)	3600		
Noise (Db)	≤95		

Item	Metric	U.S.
Bucket Capacity	0.13 m^3	4.59 ft^3
Max Lifting Force	380 Kg	838 Lb
Travel Speed	0-5.5 Km/h	0-3.42 mile/h
Operating Weight	1030 Kg	2270.76 Lb








DRT-380T
Product Parameters

Item	Metric	U.S.
Max working height	2100 mm	82.70 inch
Max pin height	1880 mm	74.01 inch
Max Dumping height	1480 mm	58.26 inch
Max Dumping distance	430 mm	16.92 inch
Max Dumping Angle	30°	30°
Rollback of bucket on ground	25°	25°
Departure angle	27°	27°
Total height	1270 mm	50.00 inch
Ground clearance	110 mm	4.33 inch
Wheel base	760 mm	29.92 inch
Overall length without bucket	1782 mm	70.15 inch
Total width	1090 mm	42.91 inch
Bucket width	1150 mm	45.28 inch
Total length with bucket	2285 mm	89.96 inch
Turn radius forward turning	1300 mm	51.18 inch



DRT-380W
Product Parameters

Item	Metric	U.S.
Max working height	2090 mm	82.30 inch
Max pin height	1895 mm	74.60 inch
Max Dumping height	1430 mm	56.30 inch
Max Dumping distance	450 mm	17.71 inch
Max Dumping Angle	30°	30°
Rollback of bucket on ground	25°	25°
Departure angle	27°	27°
Total height	1280 mm	50.39 inch
Ground clearance	105 mm	4.13 inch
Wheel base	690 mm	27.16 inch
Overall length without bucket	1782 mm	70.15 inch
Total width	1130 mm	44.48 inch
Bucket width	1090 mm	42.91 inch
Total length with bucket	2285 mm	89.96 inch
Turn radius forward turning	1300 mm	51.18 inch



DRT-430T/W
Product Advantages



1 Large flow rate, up to 43 L/min, can meet any attachment basically

2 Hydraulic oil temperature sensor control heat dissipation

3 Standing pedal with non-slip design and shock absorption cushion



4 Full-time drive, 2 high-torque motor

5 International standard quick-change plug

6 3 pumps & 3 valves

7 Power system, Briggs& Stratton 3864, Rato739, Honda GX690, all with EPA/Euro V/CE certificate.

DRT-430T/W

Product Parameters

Engine Brand	Briggs & Stratton	Honda	Rato
Rated Power (KW)	23HP		
Fuel	Diesel/ Gasoline		
Number of cylinders	2		
Fuel tank capacity	20L		
Rotating speed (rpm)	3600		
Noise (Db)	≤95		

Item	Metric	U.S.
Bucket Capacity	0.1 m^3	3.53 ft^3
Max Lifting Force	430 Kg	947 Lb
Travel Speed	0-5.5 Km/h	0-3.42 mile/h
Operating Weight	1100 Kg/ 1070 Kg (Track/ Tire)	2425 Lb/ 2359Lb (Track/ Tire)









DRT-430T
Product Parameters

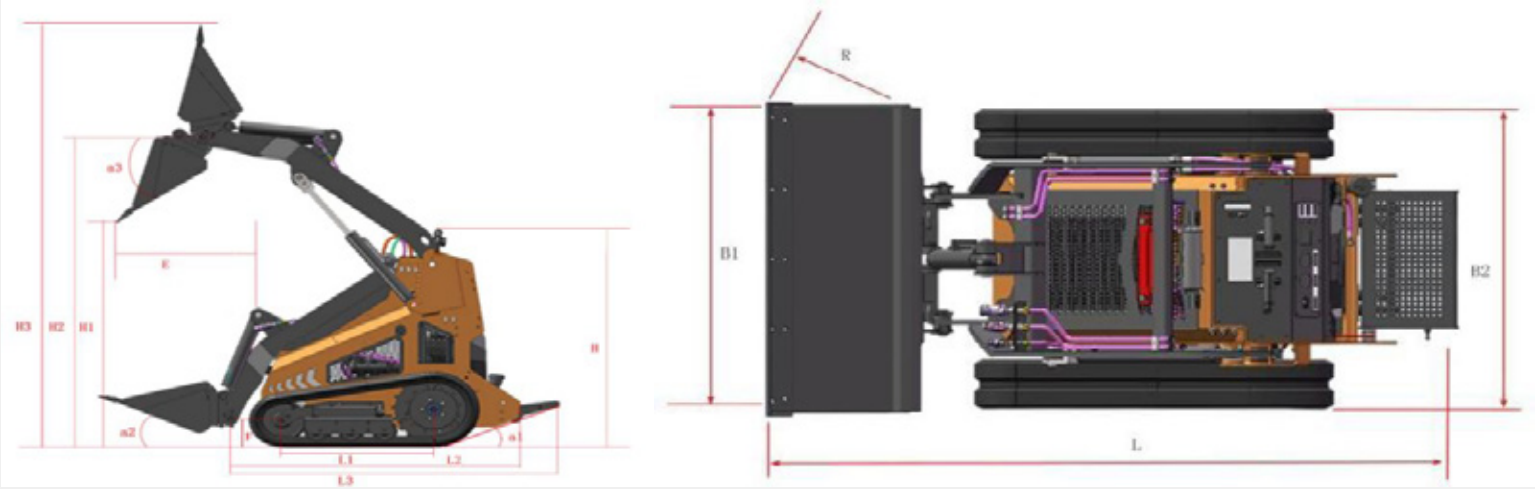

Track-type	Metric	U.S.
Max working height (H3)	2473 mm	97.36 inch
Max pin height(H2)	1900 mm	74.80 inch
Max Dumping height (H1)	1458 mm	57.40 inch
Max Dumping distance(E)	594 mm	23.39 inch
Max Dumping Angle (a3)	35°	35°
Rollback of bucket on ground (a2)	25°	25°
Departure angle (a1)	22°	22°
Total height (H)	1330 mm	52.36 inch
Ground clearance (F)	122 mm	4.80 inch
Wheel base (L1)	757 mm	29.80 inch
Overall length without bucket (L3)	1753 mm	69.02 inch
Total width (B2)	1090 mm	42.91 inch
Bucket width (B1)	1150 mm	45.27 inch
Total length with bucket (L)	2215 mm	87.20 inch
Turn radius forward turning (R)	1336 mm	52.60 inch

DRT-430W
Product Parameters

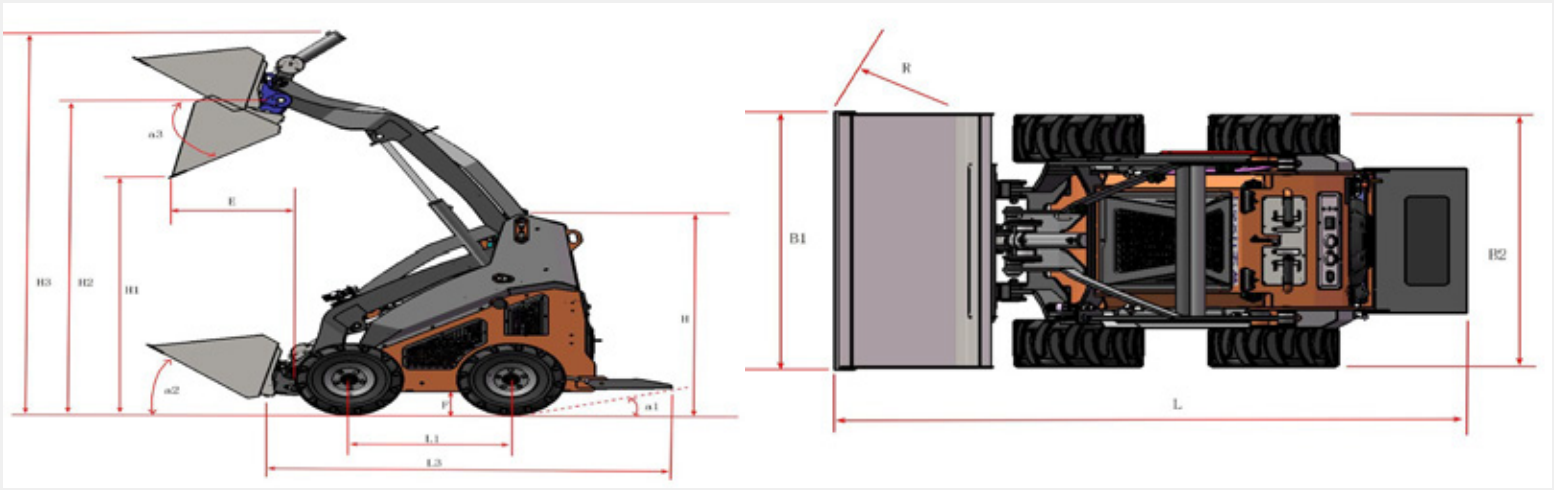

Wheel Vision	Metric	U.S.
Max working height (H3)	2435 mm	95.87 inch
Max pin height(H2)	2000 mm	78.70 inch
Max Dumping height (H1)	1512 mm	59.50 inch
Max Dumping distance(E)	530 mm	20.87 inch
Max Dumping Angle (a3)	32°	32°
Rollback of bucket on ground (a2)	39°	39°
Departure angle (a1)	15°	15°
Total height (H)	1305 mm	51.38 inch
Ground clearance (F)	150 mm	5.90 inch
Wheel base (L1)	685 mm	26.90 inch
Overall length without bucket (L3)	1752 mm	69.00 inch
Total width (B2)	1160 mm	45.67 inch
Bucket width (B1)	1180 mm	46.47 inch
Total length with bucket (L)	2220 mm	87.40 inch
Turn radius forward turning (R)	1335 mm	52.55 inch

DRT-450T/W
Product Advantages

Iron Pipes, increase using life, improve heat dissipation performance.

Hydraulic Oil Radiator, separated from the engine.



Automatic Bucket Leveling.

Four Impro motors with **23*8.5 tires.**

Control Panel with brushed stainless steel etching process, high end and high class.

Leather pad improves safety protection.



Engine Guard, protect the engine.

Foot Pedal with cushioning device, non-slip design and can be folded upward.

Triangle-shaped Tracks, small grounding pressure.
More **Supporting Wheels** than peer products.

DRT-450T/W
Product Parameters

Engine Brand (Track)	Briggs & Stratton	Honda	Rato
Engine Brand (Tire Type)	Briggs	Honda	Zonsen
Rated Power (KW)	23HP		
Fuel	Gasoline		
Number of cylinders	2		
Fuel tank capacity	20L		
Rotating speed (rpm)	3600		
Noise (Db)	≤95		

Item	Metric	U.S.
Bucket Capacity	0.13 m^3	4.59 ft^3
Max Lifting Force	450 Kg	992 Lb
Travel Speed	0-4.5 Km/h (Track) / 6.5 Km/h (Tire Type)	0-2.80 mile/h (Track) / 4.04 mile/h (Tire Type)
Operating Weight	1160 Kg	2557 Lb







DRT-450T
Product Parameters

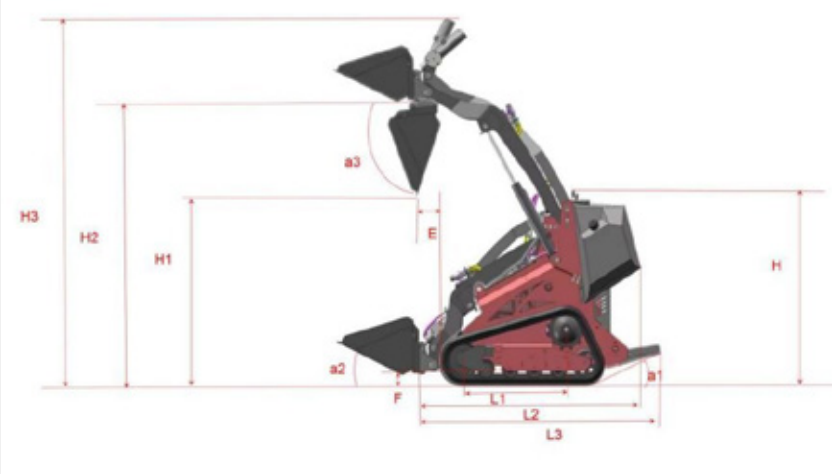

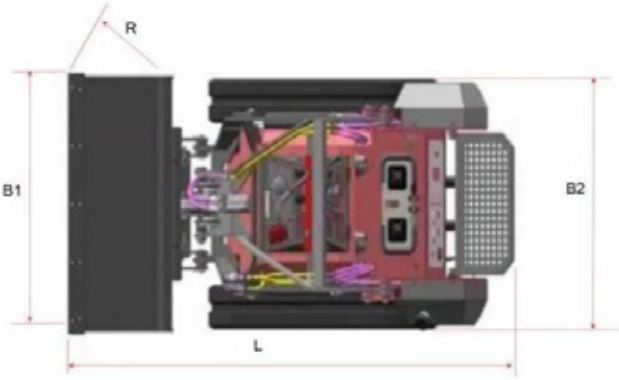

Track Vision	Metric	U.S.
Max working height (H3)	2474 mm	97.40 inch
Max pin height(H2)	1977 mm	77.83 inch
Max Dumping height (H1)	1275 mm	50.20 inch
Max Dumping distance(E)	175 mm	6.89 inch
Max Dumping Angle (a3)	70°	70°
Rollback of bucket on ground (a2)	25°	25°
Departure angle (a1)	23°	23°
Total height (H)	1300 mm	51.18 inch
Ground clearance (F)	120 mm	4.72 inch
Wheel base (L1)	890 mm	35.04 inch
Overall length without bucket (L3)	1767 mm	69.57 inch
Total width (B2)	1030 mm	40.55 inch
Bucket width (B1)	1070 mm	42.13 inch
Total length with bucket (L)	2319 mm	91.30 inch
Turn radius forward turning (R)	1440 mm	56.69 inch

DRT-450W
Product Parameters

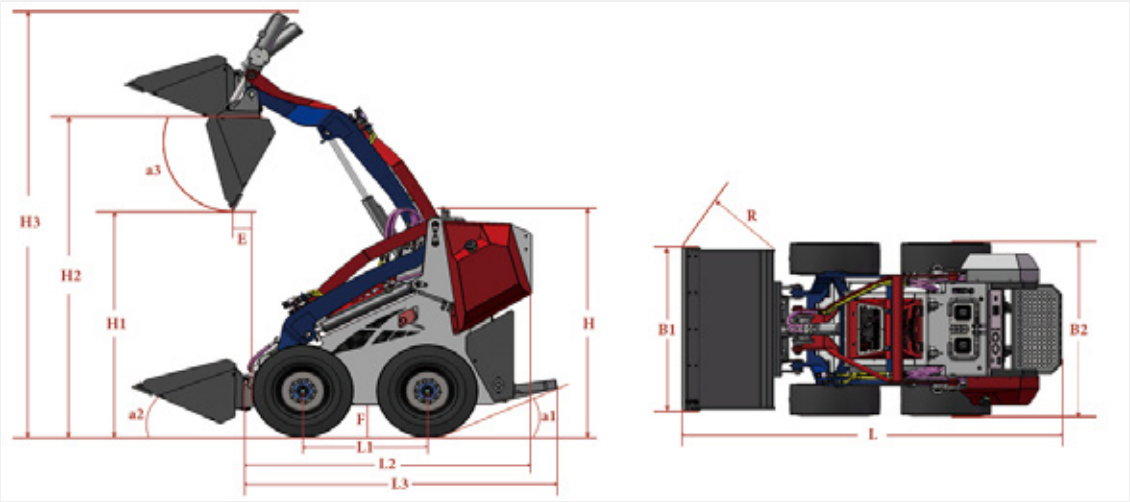

Track Vision	Metric	U.S.
Max working height (H3)	2524 mm	99.37 inch
Max pin height(H2)	2027 mm	79.8 inch
Max Dumping height (H1)	1325 mm	52.17 inch
Max Dumping distance(E)	175 mm	6.89 inch
Max Dumping Angle (a3)	70°	70°
Rollback of bucket on ground (a2)	25°	25°
Departure angle (a1)	23°	23°
Total height (H)	1350 mm	53.15 inch
Ground clearance (F)	120 mm	4.72 inch
Wheel base (L1)	890 mm	35.04 inch
Overall length without bucket (L3)	1767 mm	69.57 inch
Total width (B2)	1140 mm	44.88 inch
Bucket width (B1)	1070 mm	42.13 inch
Total length with bucket (L)	2319 mm	91.30 inch
Turn radius forward turning (R)	1440 mm	56.69 inch

DRT-480i
Product Advantages



Unique design allows free interchangeability of tracks and wheels according to job needs.



Large flow rate, up to 43 L/min, can meet any attachment basically.



Hydraulic oil temperature sensor control heat dissipation.



International standard quick-change plug, 3 pumps & 3 valves.

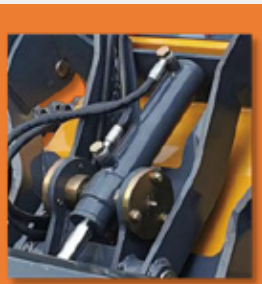

Automatic Bucket Leveling

DRT-480i
Product Parameters

Engine Brand	**Briggs & Stratton or Honda or Rato**
Rated Power (KW)	**23HP**
Fuel	**Gasoline**
Number of cylinders	**2**
Fuel tank capacity	**20L**
Rotating speed (rpm)	**3600**
Noise (Db)	**≤95**

Item	Metric	U.S.
Bucket Capacity	**0.15 m³**	**5.33 ft³**
Max Lifting Force	**480 Kg**	**1058 Lb**
Travel Speed	**0-6 Km/h**	**0-3.73 mile/h**
Operating Weight	**1180 Kg**	**2601 Lb**


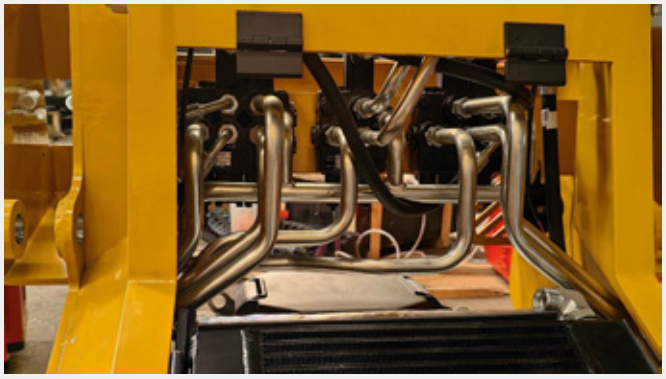
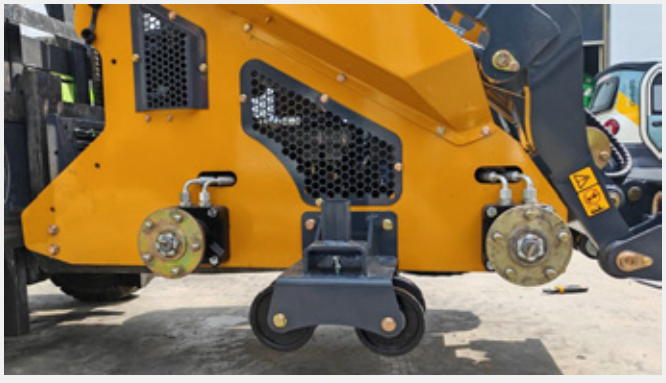


DRT-480i
Product Parameters

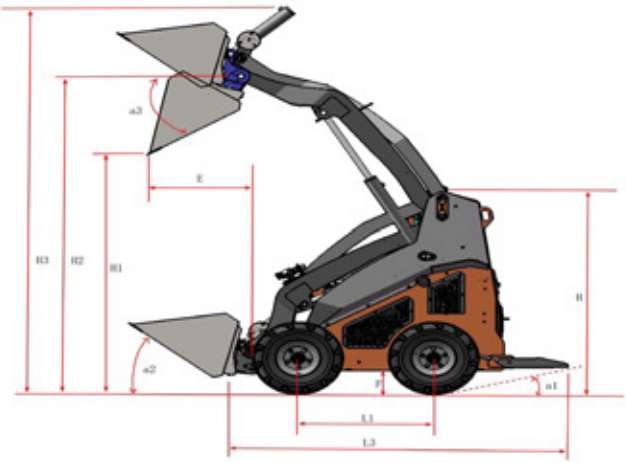

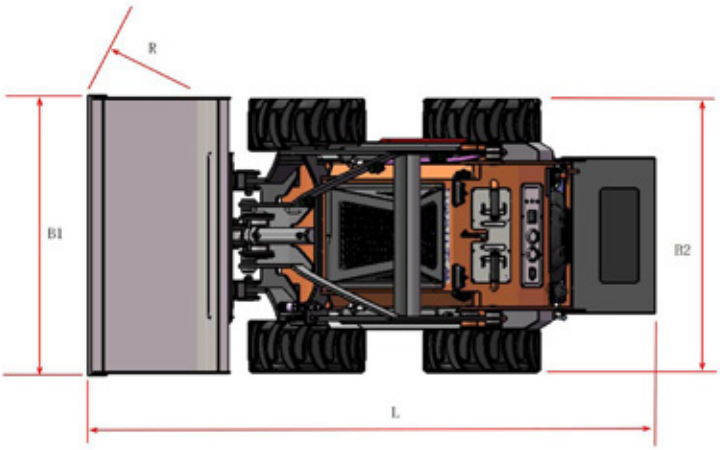

Item	Metric	U.S.
Max working height (H3)	2435 mm	95.87 inch
Max pin height(H2)	2000 mm	78.70 inch
Max Dumping height (H1)	1512 mm	59.50 inch
Max Dumping distance(E)	530 mm	20.87 inch
Max Dumping Angle (a3)	32°	32°
Rollback of bucket on ground (a2)	39°	39°
Departure angle (a1)	15°	15°
Total height (H)	1305 mm	51.38 inch
Ground clearance (F)	150 mm	5.90 inch
Wheel base (L1)	685 mm	26.90 inch
Overall length without bucket (L3)	1752 mm	69.00 inch
Total width (B2)	1160 mm	45.67 inch
Bucket width (B1)	1180 mm	46.40 inch
Total length with bucket (L)	2220 mm	87.70 inch
Turn radius forward turning (R)	1335 mm	52.50 inch


New Industrial Design
Delivers
High Cost Performance
DRT-T800

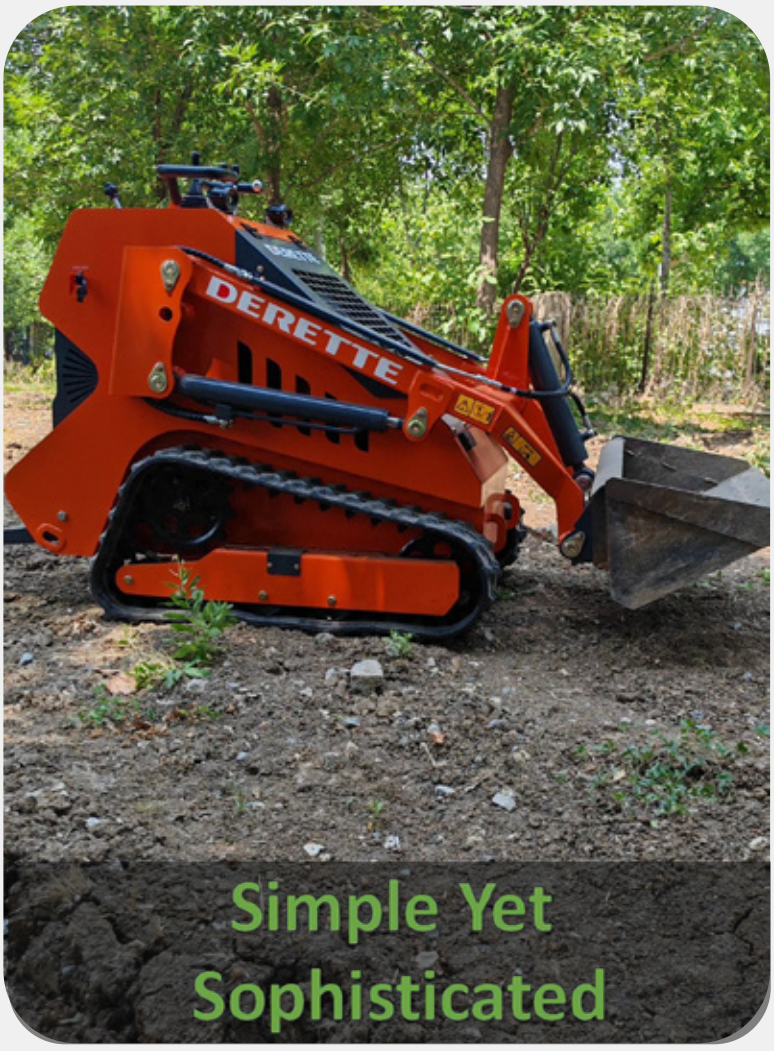
Simple Yet Sophisticated


Total Width: 850mm


Simple and Efficient Internal Layout

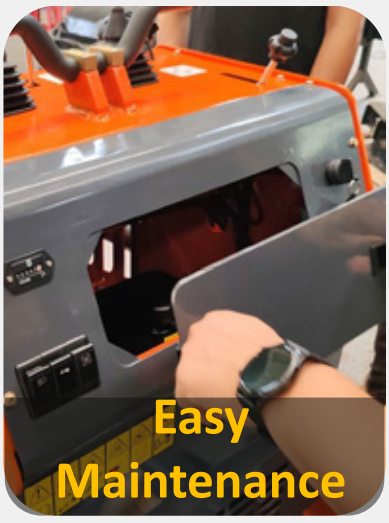
Easy Maintenance


Triangle Track

DRT-T800
Product Parameters

Engine	**Rato or Briggs & Stratton or Honda**
Rated Power	**13.5HP / 23HP**
Fuel tank capacity	**6.6L**
Rotating speed (rpm)	**3600**
Noise (Db)	**≤65**

Item	Metric	U.S.
Bucket Capacity	**0.08 m³**	**3 ft³**
Max Lifting Force	**360 Kg**	**794 Lb**
Travel Speed	**0-5 Km/h**	**0-3.11 mile/h**
Operating Weight	**870 Kg**	**1918.02 Lb**




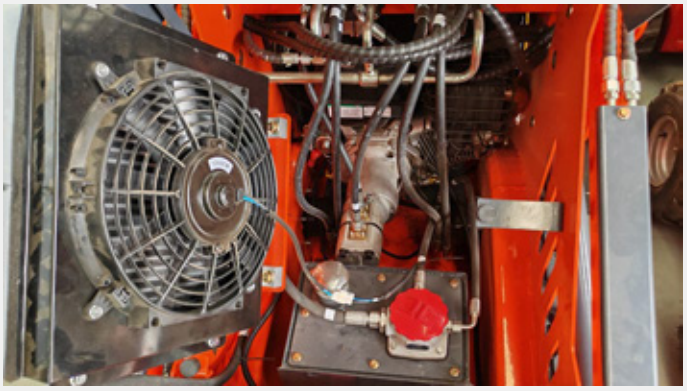

DRT-T800
Product Parameters

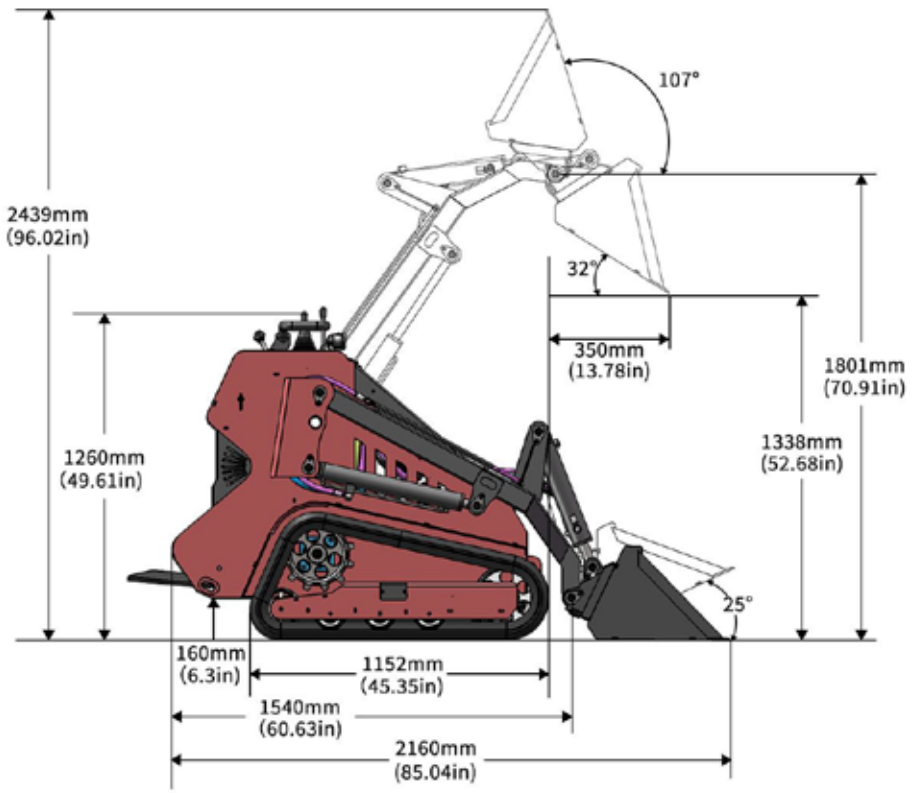

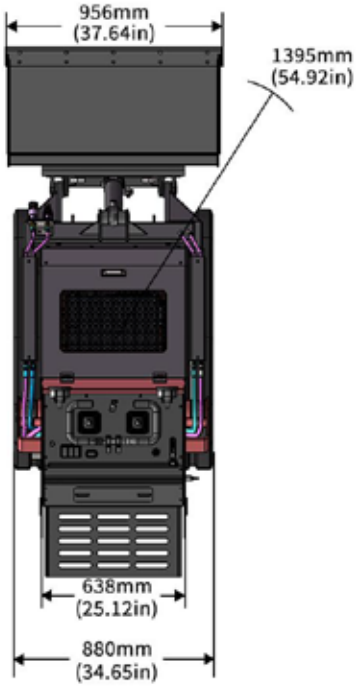



DRT-V1000
Product Advantages



900 mm
Body width is 900mm, maneuver in narrow spaces freely.

2350 mm
Pin height is 2350mm, enable loading onto high-sided trucks.

185 mm
The undercarriage has a ground clearance of 185mm.

EPA & Euro V
Engine: British Perkins 403J or Japanese Kubota D902, 18.5KW.

ITA HANSA
Hydraulic system adopts Italian HANSA closed-loop system.

Pilot Control Handle
Allows single-handed, easy and precise control.

Foam Padding
Operator's position is equipped with foam padding to add comfort.

Bucket Float
When using sweeping attachment, can follow the ground's contours.

Water Cooling
Engine cooling is water-cooled, enabling the machine to work 24h.

DRT-V1000
Product Parameters

Engine Brand	Perkins 403J	Kubota D902
Rated Power (KW)	25HP	
Fuel	Diesel	
Engine Cooling	Liquid	
Number of cylinders	3	
Fuel tank capacity	25L	
Rotating speed (rpm)	2800	
Noise (Db)	≤95	

Item	Metric	U.S.
Bucket Capacity	0.18 m^3	6.36 ft^3
Max Lifting Force	650Kg	1433Lb
Travel Speed	0-5.8 Km/h	0-3.60 mile/h
Operating Weight	1538 Kg	3391 Lb




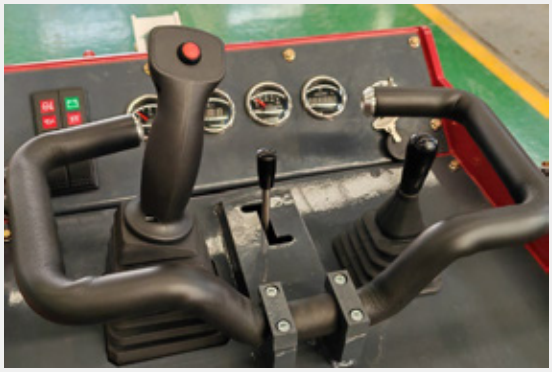


DRT-V1000
Product Parameters

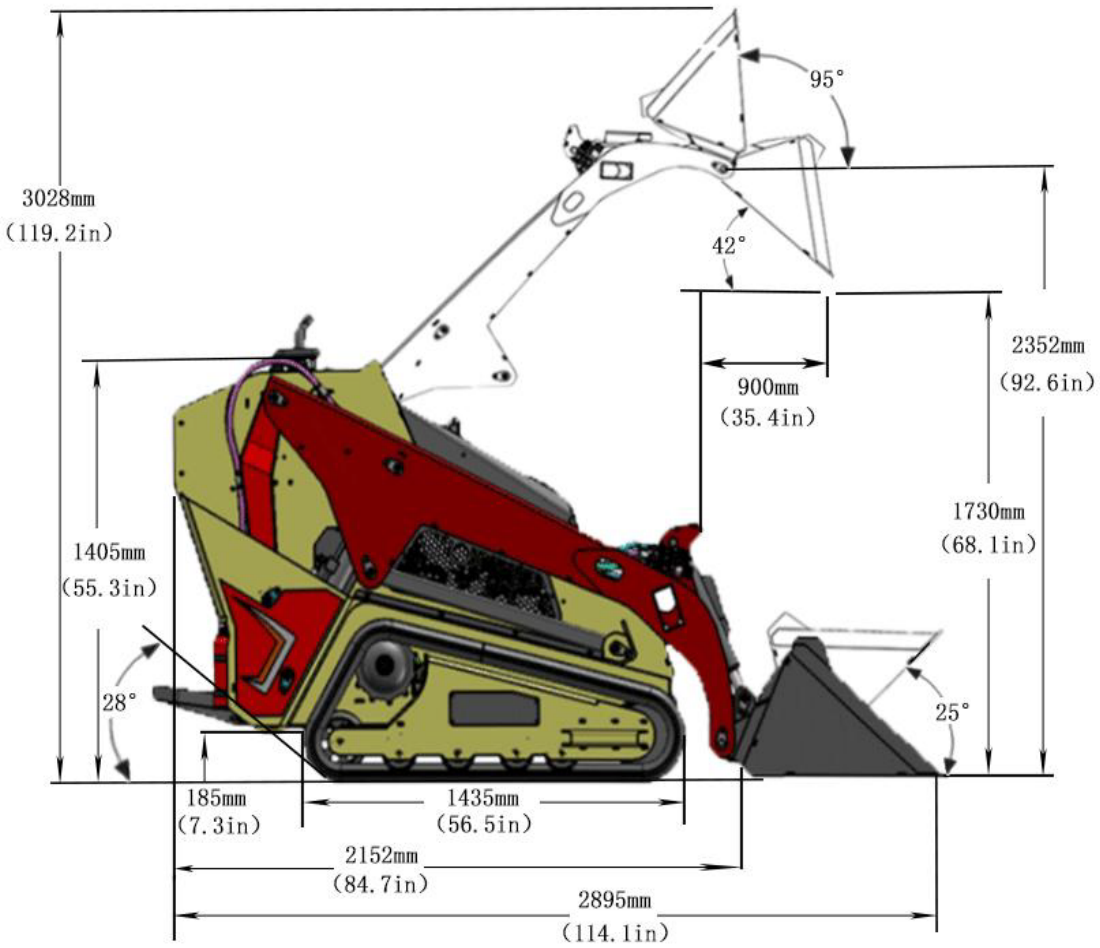

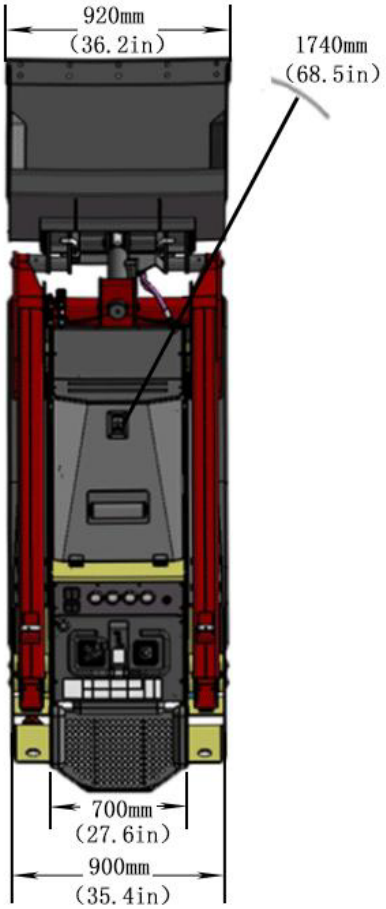

DRT-XC1100
Product Advantages



More comprehensive configurations


Counterweight


Bucket cutting edge


Fire extinguisher


Instruction manual bucket

All core components use world-renowned brands







Engine: **Kubota D1105**

LCD Instrument: **Murphy**

Pump: **Hansa**

Valve: **EBI**

Motor: **Impro**

Air Filter: **Donaldson**

Hose Protection: **Continental**

Hydraulic Oil Return Filter: **Yundee**

Unparalleled safety design





Dual-Layer Hose Protection:
Continental® sleeves + wear-resistant black canvas.

Custom Molded Seat Cushions:
The ergonomic seat cushions are custom-molded and designed to flip open, allowing operators to inspect the machine's interior for maintenance purposes.



Parking Function:
The equipment is equipped with a parking function. When activated, the loader remains stationary and does not slide or roll when parked on a slope.





Battery Protection via Cold-Zone Placement:
In order to prevent the heat of the engine from being quickly transferred to the battery and thus avoid reducing the battery's lifespan, the battery is placed above the engine rather than in front of it.

Isolated Engine Compartment:
The engine area is fully isolated from the operator compartment, preventing heat transfer and creating a more comfortable working environment while safeguarding sensitive components.

Full-View Design:
The operator standing on the operating platform can see the bucket and attachments in all directions clearly.





Extremely convenient maintenance

- **Tracks:** Optional 200mm and 230mm
- **Body Width:** Optional 900mm and 950mm
- **Easy-Access Loader Sides:**
  The loader's sides are designed for quick and effortless disassembly, streamlining routine maintenance and inspection tasks.



- **Lever Throttle Control:**
  The intuitive lever throttle design offers precise and effortless speed control



- **Dual Rear Fuel Tanks:**
  The innovative dual-tank design at the rear increases fuel capacity, extending operational runtime and reducing refueling frequency for enhanced productivity.

Design aesthetic that balances appearance and performance



- **Maintenance-Free Running Gear:**
  The load-bearing wheels, guide wheels, and tail wheels are designed for lifelong maintenance-free operation, significantly reducing future maintenance costs and workload.



- **Enhanced Air Filtration:**
  Features an additional external air filter that improves filtration efficiency, ensuring cleaner air intake for the engine and simplifying maintenance.



- **Convenient Oil Drain:**
  An engine oil drain port is located on the left side of the footrest, facilitating easy and efficient oil changes during regular maintenance.



- **Durable Coupler:**
  The custom-molded coupler boasts a service life exceeding 2,000 hours, ensuring long-term reliability and consistent performance.

DRT-XC1100
Product Parameters

Item	XC1100	
	With Rubber Track	
	Kubota D1105	
	Metric	U.S.
Key Specifications		
Rated Power (KW)	18.4(25Hp)	
Operating Weight	1690Kg	3718Lb
Rated Operating Capacity	750Kg	1650Lb
Ground Pressure (Rubber)	2657Kg/m²	3.81Psi
Auxiliary Hydraulic Flow	48 L/min	12.7 Gal/min
Auxiliary Hydraulic Pressure	20 Mpa	2900Psi
Rotating speed (Rpm)	Kubota:3220	26.90 inch
Noise (Db)	≤95	
Engine		
Emissions Tier	EU NRM 97/68/EC Stage 5	
	EPA Tier 4 Final	
Engine Cooling	Liquid	
Engine Fuel	Diesel	
Displacement	1.131 L	69 in³
Number of Cylinders	3	
Performance		
Tipping Load	1454 KG	3199 Lb
Travel Speed	5.8 Km/h	3.52 Mph
Travel Speed - Reverse	5 Km/h	3.1 Mph
Attachment Mounting System	CII (Common Industry Interface)	
Capacities		
Fuel Tank	40 L	10.7 Gal
hydraulic system		
Hydraulic oil tank capacity	35 L	9.25 Gal
Pump Capacity	48 L/ Min	12.68 Gal/Min
System Relief @ Quick Couplers	200 Bar	2900 Psi

DRT-XC1100
Product Parameters

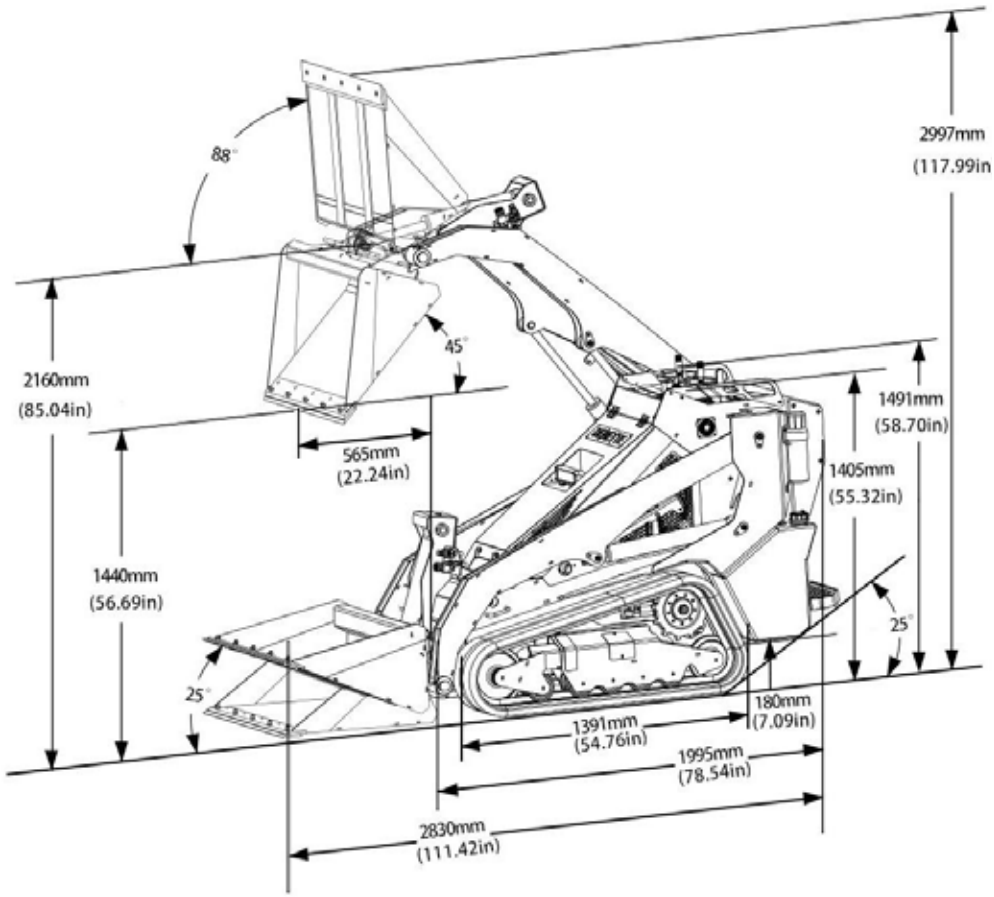

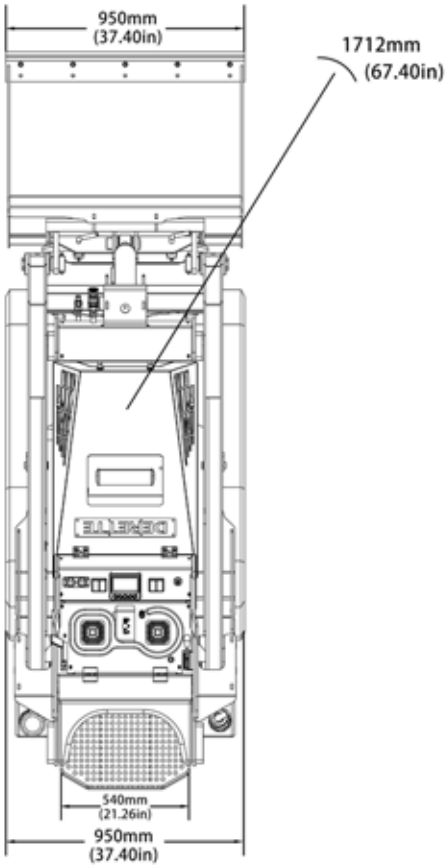







Attachments



Mixing Bowl

Size	540*710 mm
Weight	52 Kg
Rated Load	120 Kg
Motor Displacement	420 ml/r
Max Mixing Volume	0.12 m³



Auger with Auger Drill

Size	ϕ150-600 mm
Weight	70 Kg
Depth	0-1000 mm
Motor Displacement	420 ml/r
Drill Specifications	ϕ150 ϕ220 ϕ300 ϕ400 ϕ450 ϕ600
Length	1275 mm



Mixing Bucket

Size	20*870*595 mm
Weight	165 Kg
Rated Load	200 Kg
Maximum Capacity	0.9 m³



4 in 1 Bucket

Size	1060*615*475 mm
Weight	105 Kg
Rated Load	110 Kg
Bucket Capacity	0.12 m³



Stone Bucket

Size	1050*770*350 mm
Weight	72 Kg
Pitch of Teeth	86 mm



Hydraulic Breaker

Size	1060*615*300 mm
Weight	160 Kg
Drive Flow	15-25 L/min
Operating Pressure	150 Bar
Strike Frequency	800-1400 b·p·m
Diameter of Brazing Rod	40 mm



Leveler

Size	850*1100*450 mm
Weight	50 Kg
Horizontal Soil Area	9.35 m³



Fork

Size	1125*895*715 mm
Weight	88 Kg
Effective Length	920 mm
Max. Fork Width	841 mm
Rated Load	120 Kg



Digger

Size	1305*650*680 mm
Weight	110 Kg
Digging Depth	1560 mm
Bucket Capacity	0.03 m³



Hydraulic Grapple

Size	960*820*590 mm
Weight	125 Kg
Max. Opening Angle	88°
Capacity	0.4 m³
Rated Load	110 Kg



Angle Blade

Size	1100*650*520 mm
Weight	120 Kg
Tilt Angle	±30°
Blade Width at Max. Tilt Angle	870 mm



Wood Chipper

Size	900*750*800 mm
Weight	125 Kg
Diameter of Broken Branches	920 mm
Inlet Size	841 mm



Log Splitter

Size	1730*500*960 mm
Weight	180 Kg
Diameter of Split Wood	300 mm
Length of Split Wood	550 mm
Operating Pressure	160 Bar



Log Splitter (Horizontal)

Size	1712*255*545 mm
Weight	160 Kg
Diameter of Split Wood	300 mm
Length of Split Wood	500 mm
Operating Pressure	160 Bar
Thrust	11 Ton



Backhoe

Size	1600*1140*1300 mm
Weight	238 Kg
Max. Digging Depth	1000 mm
Max. Digging Radius	2440 mm
Bucket Capacity	0.014 m³
Bucket Lifting Force	33 KN



Sweeper

Size	925*1417*525 mm
Weight	142 Kg
Roller Brush Diameter	50 mm
Cleaning Width	1050 mm

Attachments



Bush Cutter

Size	1236*1295*446 mm
Weight	170 Kg
Cutting Height	500 mm
Cutting Width	1185 mm
Number of Blades	2 Pieces



Tiller

Size	1335*570*460 mm
Weight	120 Kg
Working Width	1000 mm
Working Depth	60-150 mm
Number of Blades	38 Pieces



Lawn Mower

Size	1260*1360*530 mm
Weight	184 Kg
Cutting Height	25-100 mm
Cutting Width	1070 mm
Number of Blades	3 Pieces
Flow Rate	25 L/min

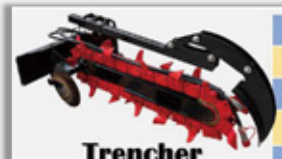

Trencher

Size	1600*630*730 mm
Weight	150 Kg
Max. Trenching Depth	800 mm
Single Trenching Width	155 mm
Chain Speed	128 m/min



Stump Grinder-mechanical Oscillating Head (Swaying Left and Right)

Size	775*850*460 mm
Weight	120 Kg
Max. Stump Height	500 mm
Max. Cutting Depth	300 mm
Number of Teeth	16 Pieces



Stump Grinder-mechanical Oscillating Head (Swaying Back and Forth)

Size	775*850*460 mm
Weight	100 Kg
Max. Stump Height	500 mm
Max. Cutting Depth	300 mm
Number of Teeth	12 Pieces

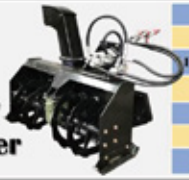

Snow Blower

Size	766*1606*1005(860) mm
Weight	136 Kg
Hourly Snow Blowing Capacity	40-50 t
Max. Throwing Thickness	330 mm
Clearing Width	990 mm
Max. Throwing Distance	8-12 m
Throwing Adjustment Angle	0-360°

And so on...











DERETTE

www.deretteloader.com

Shandong Derette Machinery Co., Ltd.