NANTONG DONG JU

Rigging Co., Ltd



To Be Safer To Be Easier

更安全，更简单

D & J

南通东巨吊索具有限公司

Nantong DongJu Rigging Co., Ltd



Nantong DongJu Rigging Co.,Ltd (D&J) was established in 2013, located in Zhuhang Town, Nantong City, Jiangsu Province of China.

Zhuhang town, (near Shanghai) has the reputation of the hometown of wire ropes. Almost 70% of common usage of steel wire ropes come from Zhuhang town in China. We purchase high quality raw materials from local factories, design, develop, and produce precast concrete accessories and wire rope slings all by our self in our own factory.

In the early years, D&J mainly focused on Marine rigging. With dedicated developing of overseas market, the booming demands of precast concrete accessories in foreign market acknowledged us commit to research and launch precast concrete accessories. We began mass production since 2016. Through several years of operation, Our well-equipped facilities and excellent quality control throughout all stages of production has enabled us to meet total customer satisfaction . All our products comply with international quality standards and are greatly appreciated in variety of markets throughout the world . We have gained a global sales network reaching : UK ,USA,Finland ,Germany ,NL,Italy etc . Annual sales exceeds $ 3 million.

南通东巨吊索具有限公（D&J）成立于 2013 年，位于中国江苏省南通市竹行镇。

靠近上海的竹行镇素有“钢丝绳之乡”的美誉，全国 70%普通用途钢丝绳都来自竹行镇。我们从当地工厂采购优质原材料，自行设计、开发和出口预制混凝土配件和各类吊索具。

早年，东巨以生产海洋工业用吊索具为主，致力于海外市场的发展。近些年国外市场对预制混凝土索具配件的需求旺盛，我们逐渐转向于预制混凝土索具配件的研发和推广，从 2016 年开始大规模生产。经过几年的经营，我们设备日渐齐全，在生产的各个阶段都进行了良好的质量控制，使之能够保证客户的总体满意度。我们的产品符合国际质量标准，在世界各地的市场深受欢迎。全球销售网络遍布英国、美国、芬兰、德国、荷兰等地。年销售额超过 300 万美元.

At present, D&J has over 50 employees, more than 4500 ㎡ working area. 800 ㎡ of Al.ferrule sleeve workshop for pressing and testing. 700 ㎡ Workshop is used to produce threaded lifting loop. 2000 ㎡ cast-in loop workshop. 1500 ㎡ of warehouse. We have three 300 ton-pressing machine, three 600 ton-pressing machine, one 1200 ton-pressing machine, and 7 CNC machines. Five shrinkage machines.

目前，D&J 拥有员工 50 余人，厂房和办公区域面积 4500 多平方米。800 ㎡铝卡套车间，用于冲压和测试。700 平方米车间用于生产螺纹吊具。2000 ㎡现浇车间。仓库面积 1500 平方米。我们有 3 台 300 吨压力机、3 台 600 吨压力机、1 台 1200 吨压力机和 7 台数控机床，五台缩管机。









We have obtained CE and ISO 9001:2015 certifications

我们已获得 CE 认证并通过 ISO 9001：2015 质量体系认证



ISET S.r.l.

ISTITUTO SERVIZI EUROPEI TECNOLOGICI

CERTIFICATE

Certificat - Certificado- Сертификат - Zertifikat - 證書

1) **APPLICANT:** (who finally puts the product on the market)
Nantong Dongju Rigging Co., Ltd
NO.39 Ruixing Road Nantong Development Zone
2) **CERTIFICATE NO.:** I/ISETC.00242019040 9
FILE REFERENCE: HQR190215003
3) **ISET MARK:**
4) **CAUTION ABOUT CE MARKING** (Instruction for the Applicant who puts the product on the EU market):
CE
The label of the CE Marking on the left side should be not less than 5mm height. CE Marking and EC Declaration of Conformity are duties for the manufacturer or its applicant who puts the product on the market. This one is responsible to start the CE marking and certification procedure as required by the legislation in force. Only for the products which are compulsorily included into specific Directives or Regulations will be necessary to appoint a Notified Body.
5) **TYPE OF PRODUCT:** Steel wire rope sling
(Lifting Ring Clutch,Thread Lifting Loop,Lifting Ring Screw,Cast In Loop)
MODEL(S): See the following annex 1
6) **LIST OF DIRECTIVES / REGULATIONS /STANDARDS** (as declared by the manufacturer itself)
Machinery Directive 2006/42/EC
EN ISO 12100:2010
7) **NOTE:** The applicant is aware about the contents and information included in the ModCOM04.06 Regulation for this type of Certificate that is considered totally accepted. The latest revision of the Regulation is available and can be downloaded from the website www.iset-italia.eu. This document is not referred to any evaluation that could be considered as included in the scope of the activities covered by the standard BS EN ISO/IEC 17065:2012 or European Regulation 765/2008.
8) **REMARK:** Certificate is issued on voluntary application from the Client and it gives to the applicant the right to use and affix the ISET Mark (at point 3) on their products, even if it doesn't imply any assessment on the safety and compliance of the product. ISET declares that the only scope of the assessment is to verify the existence of the declaration issued by the manufacturer or an applicant under its own responsibilities.
9) **DATE OF ISSUE:** 09/04/2019 **EXPIRY DATE:** 08/04/2024
10) **SIGNATURE:** Miriam Camplone
(On behalf of the Legal representative)
ISET S.R.L
This document is property of ISET Srl and any kind of reproduction is to be considered strictly forbidden.

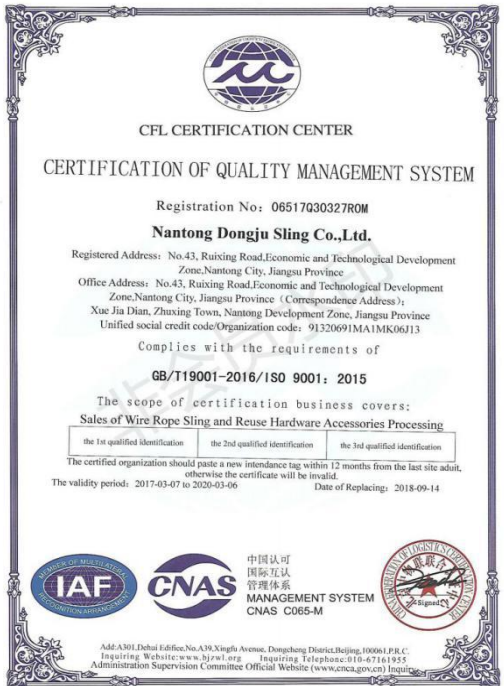

CFL CERTIFICATION CENTER

CERTIFICATION OF QUALITY MANAGEMENT SYSTEM

Registration No：06517Q30327ROM

Nantong Dongju Sling Co.,Ltd.

Registered Address：No.43, Ruixing Road,Economic and Technological Development Zone,Nantong City, Jiangsu Province
Office Address：No.43, Ruixing Road,Economic and Technological Development Zone,Nantong City, Jiangsu Province（Correspondence Address）:
Xue Jia Dian, Zhuxing Town, Nantong Development Zone, Jiangsu Province
Unified social credit code/Organization code：91320691MA1MK06J13

Complies with the requirements of

GB/T19001-2016/ISO 9001：2015

The scope of certification business covers:
Sales of Wire Rope Sling and Reuse Hardware Accessories Processing

the 1st qualified identification	the 2nd qualified identification	the 3rd qualified identification

The certified organization should paste a new intendance tag within 12 months from the last site adult, otherwise the certificate will be invalid.
The validity period：2017-03-07 to 2020-03-06 Date of Replacing：2018-09-14

IAF CNAS 中国认可 国际互认 管理体系 MANAGEMENT SYSTEM CNAS C065-M

Add:A301,Dehai Edifice,No.A39,Xingfu Avenue, Dongcheng District,Beijing,100061,P.R.C.
Inquiring Website:www.bjrwl.org Inquiring Telephone:010-67161955
Administration Supervision Committee Official Website (www.cnca.gov.cn) Inquiries

DongJu's testing system: We do sample test for each order. Ensure the loop's broken tension 5-6 times over safe working load.

东巨测试系统：每个订单我们都会抽样测试，保证每个吊索具的破断拉力至少是安全荷载的 5-6 倍。





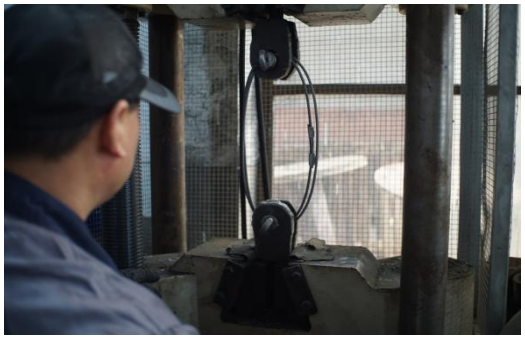

The daily production of 0.8t-6.3t cast-in loop ranges from 10,000 to 15,000 pics, 6.3t-52t from 5,000 to 10,000 pics and threaded lifting loop ranges from 1,000 to 2,000 pics. Which allows us a very short leading time.

目前我们日产能力：0.8t-6.3t 圆形吊索 10000-15000 件，6.3t-52t 5000-10000 件，螺纹吊具 1000-2000 件。我们的交货期非常短。

Complete package

完整包装



Suitable crate size

合适的木箱















Professional placement

专业装箱

Suitable Container

配套的集装箱

Precast Concrete Lifting Device

预制混凝土吊具



Thread lifting loop
螺纹吊具

Thread lifting loops are used as lifting device for the lifting anchors (Bar Sockets,Waved Sockets and Thread Sockets)
They are the most economic lifting loop and are suitable for most applications, particularly site operations. They are not suitable for turning or pitching.
Thread lifting loops can be applied with the threaded anchor with appropriate thread Rd or metric. Identification label shows the size of thread and maximum working load.
Wire length can be changed on request.

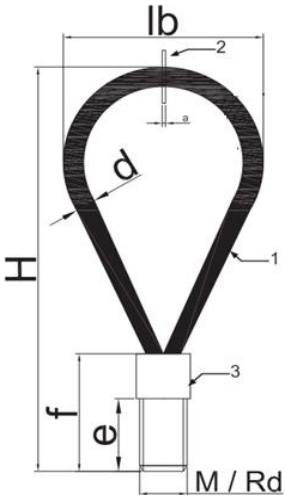



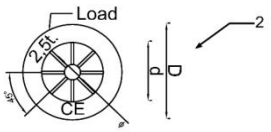

螺纹吊具是螺纹钢预埋套筒和直尾或弯尾的钢筋螺纹预埋套筒配套的钢丝绳吊索具。
它们是最经济的吊索具，适用于大多数起吊情形，尤其是现场作业。它们不适合转弯或俯仰。
螺纹吊具可与具有配套 RD 或 M 螺纹的预埋螺纹套筒一起使用。识别标签显示螺纹尺寸和最大工作负荷。
吊索钢丝绳部分长短可以定制。

Materials 材质 :

- ●1 Loop: Galvanized steel wire rope
  吊索：镀锌钢丝绳
- ●2 Label Identification: plastic or steel
  标签：塑料或钢圈
- ●3 Threaded socket: steel
  螺纹头：钢

Table 1: Dimensions of the thread lifting loop (with Rd or metric thread)
表一：螺纹吊具尺寸

	Loop			Threaded socket			Label		
Load (t)	d (mm)	H (mm)	lb (mm)	M/Rd (mm)	e (mm)	F (mm)	D (mm)	d (mm)	Φ (mm)
0.5	6	155	60	12	21	32	37	23	20
0.8	7	155	60	14	24	35	37	23	20
1.2	8	165	60	16	26	41	37	23	20
1.6	9	190	70	18	33	48	37	23	20
2	10	215	90	20	34	49	37	23	20
2.5	12	255	100	24	42	59	37	23	20
4	16	300	120	30	54	74	37	23	20
6.3	18	360	140	36	67	87	52	38	40
8	20	425	160	42	75	105	52	38	40
12.5	26	530	180	52	95	125	52	38	40

Cast-in loop
圆形预埋吊具

Cast-in loops are concrete element lifting anchors, which as opposed to conventional Threaded steel loops, are not visible after assembly. They are especially well suited for lifting foundation elements, concrete beams and hollow-core slab transportation. This lifting System is comprised of steel wire, oval shaped lifting anchors and pocket formers that are used for fixing the wire loops to the concrete for Lifting

圆形预埋吊具是部分浇筑在混凝土构件内的环形吊索，与传统的螺纹吊具不同，装配并起吊完成后，露出构件的部分会被切割掉，不可重复使用。它们特别适合于起重基础元件、混凝土梁和空心板运输。该起重系统由圆形预埋吊具和用于将圆形吊具固定到混凝土上进行起重的凹模组成。

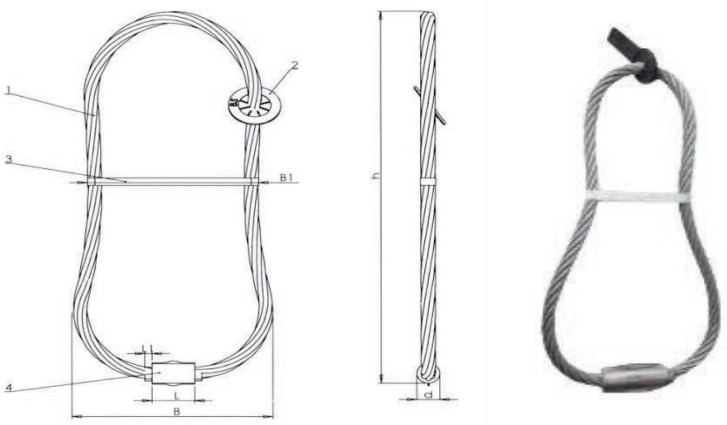

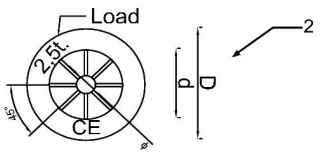

Material：材质

- 1: 6x19+IWR Galvanized Steel wire rope
  吊索：6*19 镀锌钢丝绳
- 2 Label Identification: plastic or steel
  标签：塑料或钢圈
- 3 Al Ferrule 铝套

Table 2: Dimensions of the lifting loop
表二：圆索吊具尺寸

	Loop 吊索				Al Ferrule 铝套			Label 标签		
Load (t)	h (mm)	B1 (mm)	B (mm)	Wire rope DR (mm)	d (mm)	L (mm)	L1 (mm)	D (mm)	d (mm)	Φ (mm)
0.8	200	65	85	6	12	27	5	37	23	20
1.2	225	70	90	7	14	32	5	37	23	20
1.6	245	70	100	8	16	36	5	37	23	20
2.0	265	95	125	9	18	40	5	37	23	20
2.5	285	115	140	10	20	45	5	37	23	20
4.0	345	130	160	12	24	54	5	37	23	20
5.2	390	160	180	14	28	63	5	37	23	20
6.3	415	180	210	16	32	72	5	52	38	40
8.0	460	170	220	18	36	100	15	52	38	40
10.0	510	180	250	20	40	90	10	52	38	40
12.5	570	225	280	22	44	99	10	52	38	40
16.0	640	240	295	24	48	108	10	52	38	40
20.0	715	260	320	28	56	117	10	52	38	40
25.0	800	300	380	30	60	126	10	52	38	40

Lifting Ring Screw: 螺纹吊拉头

Lifting Loop with Pressure Plate and "Goliath"

锻打螺纹头吊具和"歌利亚"

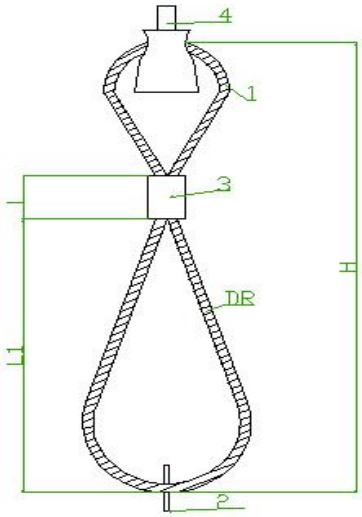

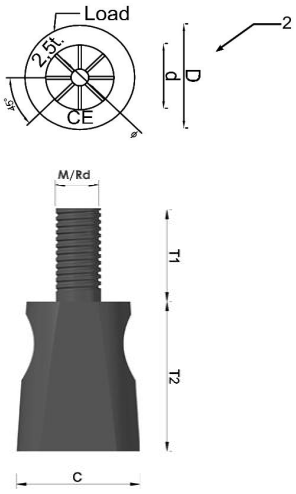



Goliath
歌利亚

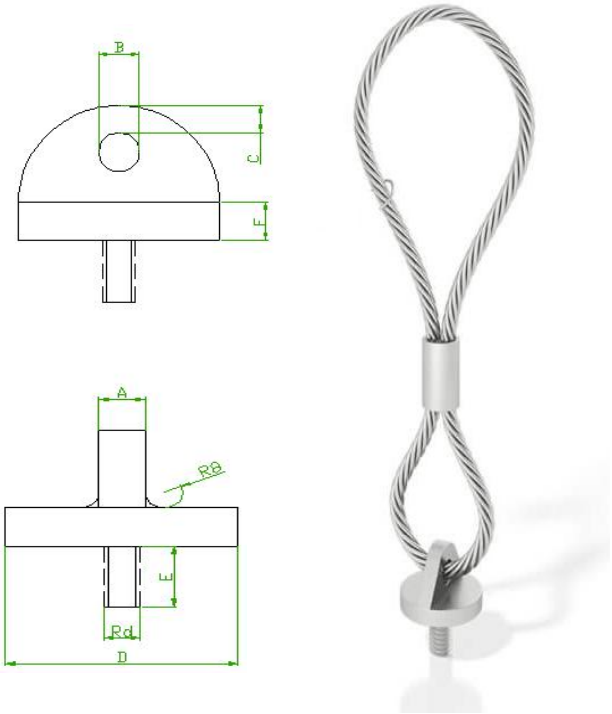

Lifting Loop with Pressure Plate
锻打螺纹头吊具

Lifting loop with pressure Plate and "Goliath" are used as lifting device for the lifting anchors of Threaded Lifting System (Bar sockets, Waved rebar tail Sockets, thread sockets).The lifting loop eye is welded on the base plate. The retracted rope loop allows stress forces from all directions. Lifting Ring Screw can be applied with the thread anchor with appropriate metric or Rd thread.
Identification label shows the size of thread and maximum working load.

锻打螺纹头吊具和歌利亚可与螺纹钢预埋套筒和直尾或波形尾的钢筋螺纹预埋套筒配套使用。
与传统的螺纹吊具相比，它们能适应来自各个方向的应力，适用于更多数起吊情形。
锻打螺纹头和歌利亚可与具有配套 RD 螺纹或 M 螺纹的预埋螺纹套筒一起使用。识别标签显示螺纹尺寸和最大工作负荷。

Materials: 材质

- ●1 Loop: Galvanized steel wire rope
  吊索：镀锌钢丝绳
- ●2 Label Identification: plastic or steel
  标签：塑料或钢圈
- ●3 Al Ferrule 铝管
- ●4 Goliath or plate: steel
  锻打铁螺纹头

Table 3: Dimensions of the loop
表 3：吊索尺寸表

	Loop 吊索			Label 标签		
Load (t)	DR (mm)	H (mm)	L1 (mm)	D (mm)	d (mm)	Φ (mm)
0.5	8	355	195	37	23	20
1.2	8	385	225	37	23	20
2	10	470	310	37	23	20
2.5	12	550	340	37	23	20
4	16	590	390	37	23	20
6.3	18	780	470	52	38	40
8	20	860	550	52	38	40
12.5	26	1080	730	52	38	40

Table 4: Dimensions of the Goliath and Pressure Plate
表四：锻打螺纹头和歌利亚尺寸

Goliath 歌利亚				Pressure Plate 锻打螺纹头					
M/Rd (mm)	T1 (mm)	T2 (mm)	C (mm)	D (mm)	A (mm)	B (mm)	C (mm)	E (mm)	F (mm)
12	20	40	30	40	10	8	10	15	10
16	22	40	33	40	10	10	10	15	10
20	25	65	60	49	13	12	13	18	13
24	30	65	55	56	14	16	14	24	14
30	35	70	55	69	18	20	18	30	18
36	35	120	90	79	20	24	20	36	20
42	40	120	90	99	25	30	25	45	25
52	40	120	100	109	28	36	28	55	28

Lifting Ring Clutch
人字板吊具

The Cable lifting ring clutch is an efficient, fast method in a connect/disconnect lifting system allowing precast concrete elements to be handled safety, with reliable and repeatable use. The high quality, engineered ring clutch is dimensionally measured,mechanically load tested and magnetic particle inspected to ensure manufacturing process meets and/or exceeds minimum design requirements.

人字板吊具又称“铁饼吊拉头”，通常与预埋在混凝土构件里的人字板配套使用。是混凝土构件连接/断开起重系统中的一种高效、快速的解决方法，使用可靠且可重复。高质量的圆形栓扣头经过尺寸测量、机械负载测试和磁粉检测，以确保制造工艺满足和/或超过最低设计要求。

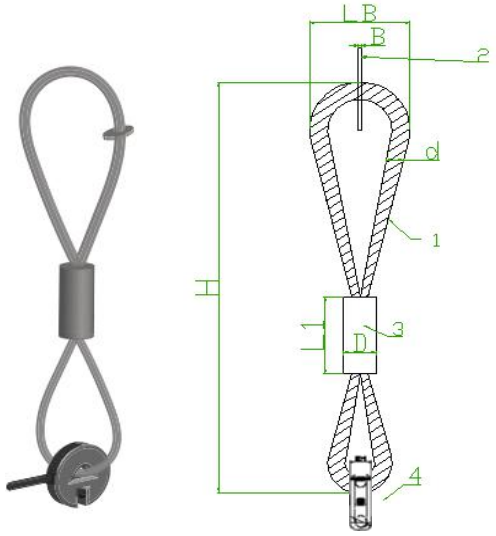

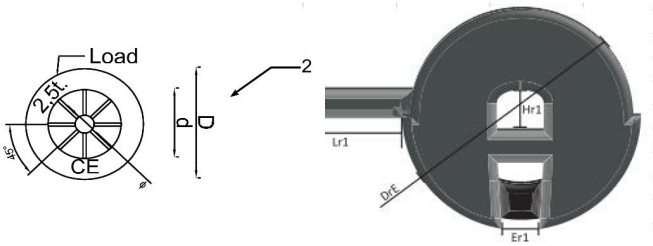

Table 5: Dimensions of the Loop
表五：人字板吊具吊索尺寸

	Loop 吊索				Label 标签		
Load (t)	d (mm)	H (mm)	LB (mm)	L1 (mm)	D (mm)	d (mm)	Φ (mm)
1.25	8	355	160	50	37	23	20
2.5	14	385	160	95	37	23	20
5.0	10	470	160	120	37	23	20
10.0	12	550	170	130	37	23	20
26	16	590	250	190	37	23	20

Materials:材质

- ●1 Loop: Galvanized steel wire rope
  吊索：镀锌钢丝绳
- ●2 Label Identification: plastic or steel
  标签： 塑料或钢圈
- ●3 Al Ferrule 铝管
- ●4 Clutch: steel 铁饼： 精铸合金钢

Table 6: Dimensions of the Clutch
表六：铁饼尺寸

Clutch 铁饼								
Load (t)	Load (KN)	DrV (mm)	Hr1 (mm)	Er1 (mm)	DrE (mm)	Lr1 (mm)	D1v (mm)	Rr1 (mm)
1.25-1.3	13	8	8	8	52	70	8	52
1.5-2.5	25	14	16	14	80	67	10	60
3.0-5.0	50	18	22	18	105	75	12.5	83
6.0-10.0	100	22	30	23	150	75	16	113
12.5-26.0	260	32	35	34	206	80	18	151

Bent (Angled) Cast-in Loop
弯制方管预埋吊具



Bent(Angled) Cast-in Loops are suitable for installation in thin concrete elements such as ceilings, floor slabs, angle brackets and light wells. For load introduction into the structure, the angle loop is additionally reinforced as required.
The eyelet for receiving the crane hook can either protrude from the plate, o be recessed in a recess.

弯制方管预埋吊具适用于安装在薄混凝土构件中，如天花板、地板、角托架和轻型井。为了将荷载引入结构中，根据需要额外加固角环。吊具大部分将预埋进混凝土构件，仅仅预留用于接收起重机吊钩的顶端钢丝绳环在外用于起吊。作业完成后需将这部分钢丝绳切掉。这部分钢丝绳环可以突出于预构件表面，也可以凹进凹槽中。

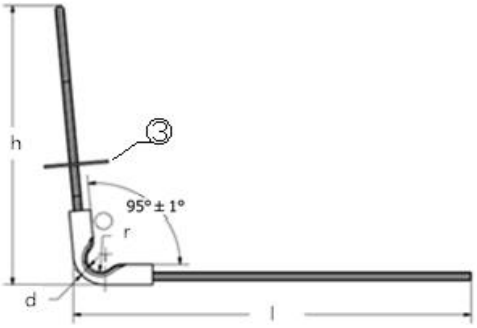

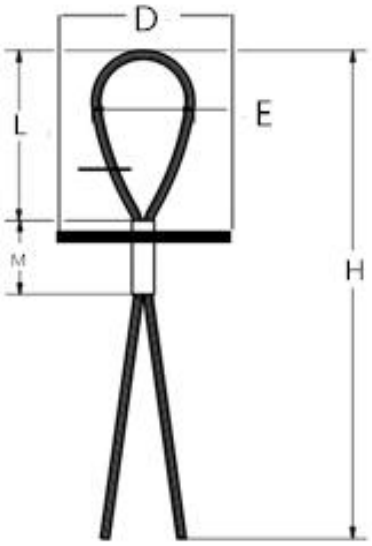

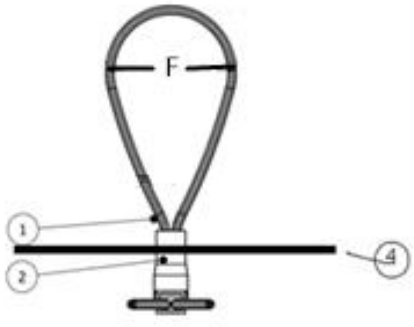

Materials: 材质

- ●1 Loop: Galvanized steel wire rope
  吊索： 镀锌钢丝绳
- ●2 Rectangle steel tube.长方形钢管
- ●3 Label Identification: steel
  标签： 钢圈
- ●4 Deformed Steel Re-Bar 200mm
  焊接 200mm 钢筋

Table 7: Dimensions of the Bent cast-in Loop
表七：弯制方管预埋吊具尺寸

Load (t)	D (mm)	E (mm)	L (mm)	M (mm)	H (mm)	h (mm)	d	l (mm)	r (mm)	F (mm)	Rectangle steel tube 长方形钢管
0.8	200	90±10	160±20	90	485±20	205±20	8*	281±20	R10	90±10	20*15*2*90
1.6	200	90±10	160±20	90	530±20	205±20	10*	330±20	R10	90±10	25*15*2*90
2.4	200	120±10	230±20	100	610±20	280±20	12*	330±20	R12.5	120±10	25*15*2*100
4.0	200	140±10	230±20	100	660±20	280±20	13*	380±20	R12.5	140±10	30*20*2*100

Polypropylene Lifting Loop
聚丙烯吊索

Polypropylene lifting loops are designed for the transport of precast concrete units only. Multiple use within the transport chain (from production to installation of the unit) means no repeated usage.

聚丙烯吊索仅用于运输轻质预制混凝土构件。与钢丝绳圆形吊索相似，不可重复使用。

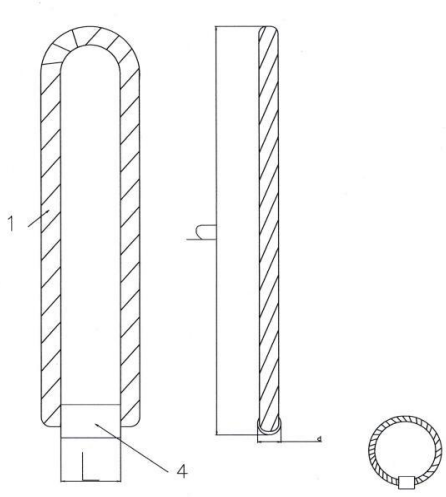



Materials: 材质

- ●1 Loop: Polypropylene
  聚丙烯绳
- ●2 Label Identification: plastic ring
  标签：塑料圈
- ●3 Al Ferrule 铝管

Table 8: Dimensions of the Polypropylene lifting loop
表八：聚丙烯吊索尺寸

Load KG	Rope diameter(mm) 聚丙烯绳直径	Circumference(mm) 周长	h(mm)
150	6	490	200
250	8	550	222
360	10	580	235
500	12	610	255
850	14	670	280

Spherical Head Anchors
球头锚



- Lifting System for precast elements. –预制构件吊装系统
- Working Load from 1.3 to 32 Tons. –工作负荷 1. 3~32 吨
- Full range of Anchors, Formers, and Lifting Hooks.–全套锚、模板和吊钩
- Lifting hooks and Formers reusable. –可重复使用的吊钩和模板
- Lifting hooks with CE certification.–具有 CE 认证的吊钩

Spherical head anchors are provided with CE certificate. Other lengths can be provided on request.

球头锚具有 CE 证书。其他长度可根据要求提供。

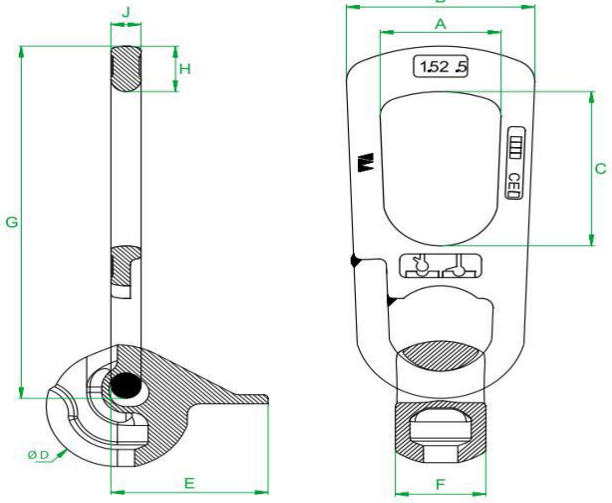

Materials: 材质

●42CRMO 42 钼铬合金钢



Table 9: Dimensions of the Spherical head anchors

表九：球头锚尺寸

Load(T)	1.3	2.5	5	7.5-10	15-20	32
A (mm)	44	56	68	82	113	175
B (mm)	74	88	118	160	191	269
C (mm)	70	85	88	112	135	189
ΦD (mm)	56	68	88	112	152	195
E (mm)	54	66	83	113	151	214
F (mm)	32	42	57	73	110	153
G (mm)	162	196	237	339	447	584
H (mm)	20	25	37	50	75	100
J (mm)	12	14	16	26	30	45

Flat Anchors
扁头锚



The flat anchor is the main part of a rapid coupling and release lifting system with flat steel inserts.It offers a wide range of application, from slabs to columns, walls, and beams with no limit on lifting load direction. A wide selection of Lifting Inserts suit different kinds of lifting and transportation needs.

扁头锚是带扁钢插入件的快速耦合和释放提升系统的主要部件，它的应用范围很广，从板到柱、墙和梁，不受提升荷载方向的限制可供选择的各种起重嵌件可满足各种起重和运输需要。

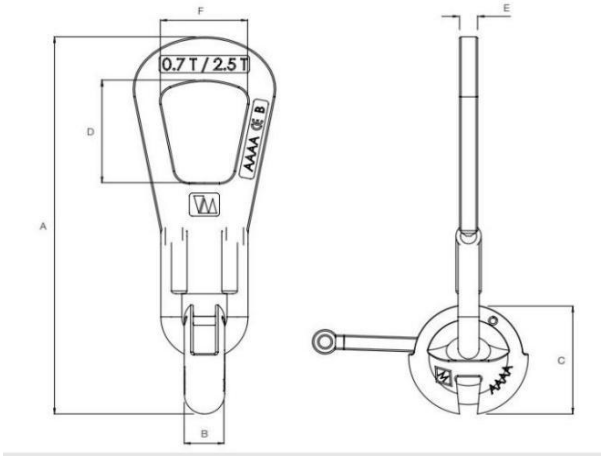



Table 10: Dimensions of the Flat anchors
表十：扁头锚尺寸

Load(T)	A(mm)	B(mm)	C(mm)	D(mm)	E(mm)	F(mm)
2.5	261	27	80	70	50	48
5	330	36	100	86	71	
10	425	50	140	112	90	
26	605	72	209	160	120	



Precast Concrete Lifting Inserts

预制混凝土起重预埋件

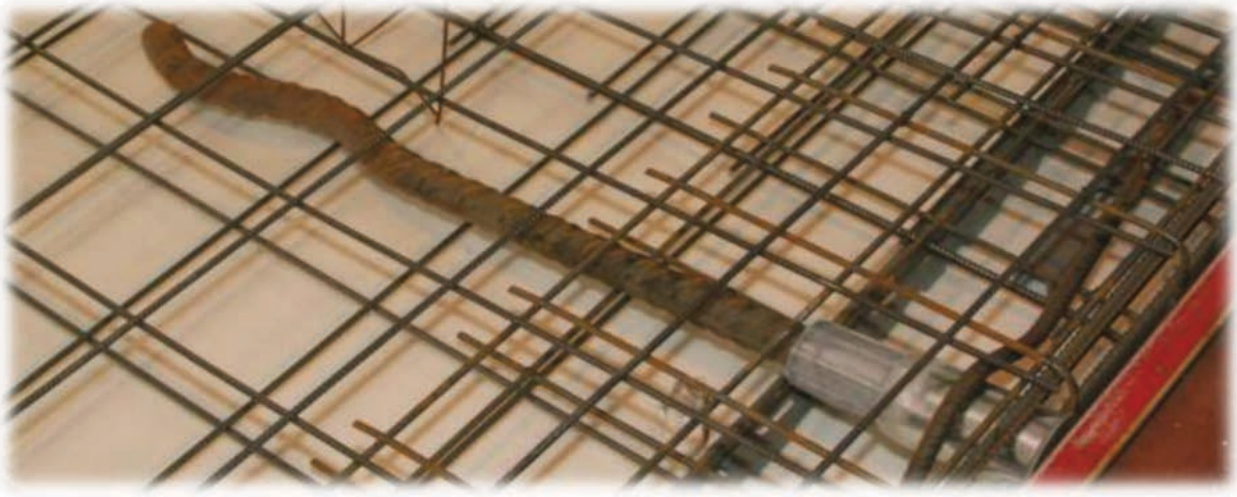

Thread Socket
螺纹钢套筒

D&J produces inner thread Inserts equipped with ribbed steel bars for anchoring. Thread Socket-L (long wavy tail anchor) and Thread Socket-S (short wavy tail anchors) are quick to install and versatile for lifting most types of precast units. The socket of the wavy tail is available in high grade zinc plated steel, stainless steel, and acid resistant materials.

D&J 内螺纹套筒，配有用于锚固的带肋钢筋。Thread Socket-L 锚（长波尾螺纹套筒）和 Thread Socket-S（短波尾螺纹套筒）安装迅速，用途广泛吊装大多数类型的预制件。套筒采用高级镀锌钢制成，耐酸耐锈蚀。


Thread Socket - L


Thread Socket - S

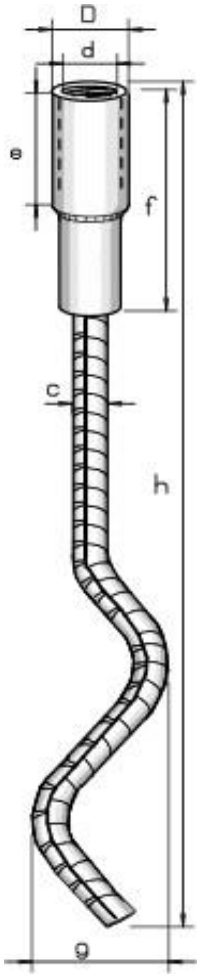

Materials: 材质
- ●1 Ribbed steel bar B500B
  带肋钢筋
- ●2 Zinc plated steel
  镀锌钢

Table 11: Dimensions of the Thread Socket-L
表十一：长波尾螺纹套筒尺寸

Load(T)	Type d x h	D(mm)	e(mm)	F(mm)	g=min.cx2.5
0.5	Rd 12 x 137	16	22	40	20
0.8	Rd 14 x 170	20	25	48	25
1.2	Rd 16 x 216	21.5	27	58	30
1.6	Rd 18 x 235	24	34	65	30
2.0	Rd 20 x 257	27	35	70	35
2.5	Rd 24 x 360	32	43	80	40
4.0	Rd 30 x 450	38	56	101	50
6.3	Rd 36 x 570	48	69	110	62
8.0	Rd 42 x 620	54	80	140	70
12.5	Rd 52 x 880	70	90	170	80
15	Rd 56 x 1200	70	80	170	90
20	Rd 60 x 1400	76	85	170	100
22	Rd 48 x 1260	70	60	140	100

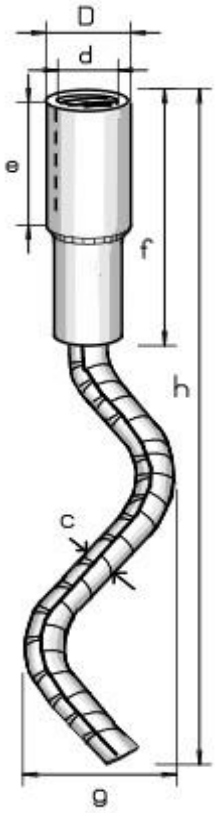

Table 12: Dimensions of the Thread Socket-S
表十二：短波尾螺纹套筒尺寸

Load(T)	Type d x h	D(mm)	e(mm)	F(mm)	g=min.cx2.5
0.5	Rd 12 x 108	16	22	40	20
0.8	Rd 14 x 130	20	25	48	25
1.2	Rd 16 x 167	21.5	27	58	30
1.6	Rd 18 x 175	24	34	65	30
2.0	Rd 20 x 187	27	35	70	35
2.5	Rd 24 x 240	32	43	80	40
4.0	Rd 30 x 300	38	56	101	50
6.3	Rd 36 x 380	48	69	110	62
8.0	Rd 42 x 450	54	80	140	70

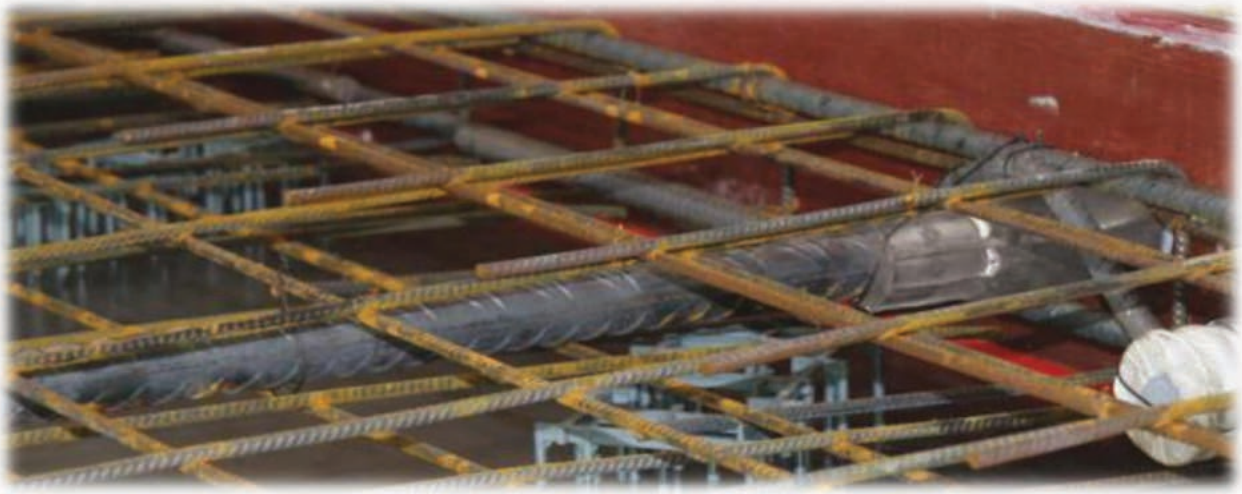

Thread Socket - F

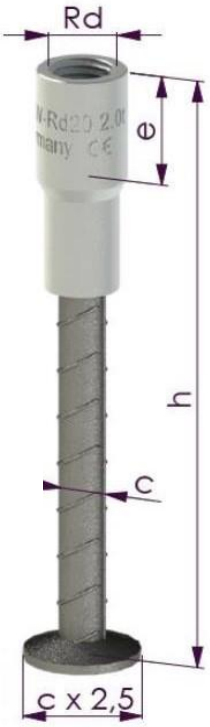

Materials: 材质

- ●1 Ribbed steel bar B500B
  带肋钢筋
- ●2 Zinc plated steel
  镀锌钢

D&J Thread Socket-F has a forged foot, by mean of their construction specially suitable for slender concrete units and for the installation in thin walls. The sleeve is galvanized and Rd-threaded. To prevent the penetration of concrete and dirt into the thread, plugs made of plastic or holding disks are used. The lengths of the anchors can be changed, matching to your specific installation case, the load level can change.

D&J Thread Socket-F 有一个锻造底座，其结构特别适合细长混凝土单元和薄壁安装。套管镀锌并采用 RD 螺纹。为防止混凝土和污垢渗入螺纹，锚的长度可以根据您的具体安装情况进行更改，荷载水平可以更改。

Table 13: Dimensions of the Thread Socket-F
表十三：锻造底座螺纹套筒尺寸

Load(T)	Thread Rd	Thread Depth e(mm)	Rod Ø c(mm)	Height h(mm)
0,5	12	22	8	70
0.5	12	22	8	100
0.5	12	22	8	136
0,5	12	22	8	174
0.5	12	22	8	250
0,5	12	22	8	295
0,8	14	25	10	70
0,8	14	25	10	105
0,8	14	25	10	135
0,8	14	25	10	155
0,8	14	25	10	167
0,8	14	25	10	220
1,2	16	27	10	70
1,2	16	27	10	115
1,2	16	27	10	130

1,2	16	27	10	140
1,2	16	27	10	150
1,2	16	27	10	195
1,6	18	34	12	150
1,6	18	34	12	70
1,6	18	34	12	205
1,6	18	34	12	275
2,0	20	35	14	90
2,0	20	35	14	170
2,0	20	35	14	190
2,0	20	35	14	235
2,0	20	35	14	300
2,5	24	43	16	105
2,5	24	43	16	115
2,5	24	43	16	210
2,5	24	43	16	260
2,5	24	43	16	275
2,5	24	43	16	355
2,5	24	43	16	380
4,0	30	56	20	125
4,0	30	56	20	150
4,0	30	56	20	270
4,0	30	56	20	390
4,0	30	56	20	510
6,3	36	69	25	230
6,3	36	69	25	330
6,3	36	69	25	640
8,0	42	80	28	450
8,0	42	80	28	590

Thread Socket - C
无缝钢螺纹套筒

D&J Thread Socket-C has inner Rd or Metric thread. It is galvanized and chromated. The lifting socket are by mean of their low height and the individual fixing possibilities suitable for transportation of all kinds of precast concrete units.To prevent dirt and concrete from penetrating into the thread of the socket, plastic stoppers respectively holding discs are used.

D&J 无缝螺纹钢套筒有内 Rd 或 M 螺纹。它是由无缝钢管制成的. 由于其低的高度和单独的固定可能性，适合于各种预制混凝土单元的运输。为了防止灰尘和混凝土渗透到插座的螺纹中，需使用塑料塞子。

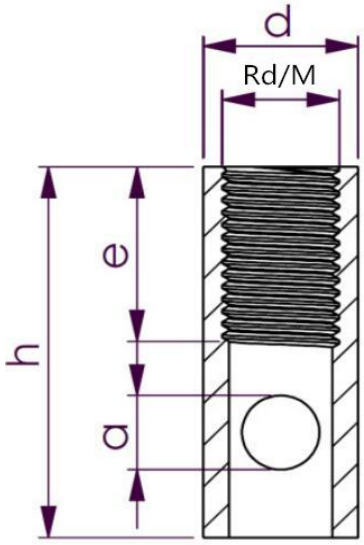



Table 14: Dimensions of the Thread Socket-C
表十四：无缝螺纹钢套筒尺寸

Load(T)	Thread Rd/M	Height h [mm]	Outer Ø d [mm]	Thread length e [mm]	Bore Ø a [mm]
0,5	12	40	16	22	8
0,8	14	48	18	25	10.5
1,2	16	54	21	27	13
1,6	18	65	25	34	13
2,0	20	70	27	35	15.5
2,5	24	80	32	43	18
4,0	30	101	38	56	22.5
6,3	36	125	48	69	27.5
8,0	42	140	54	80	32
12,5	52	170	70	107	40

Thread Rebar socket
钢筋螺纹套筒



D&J Thread Rebar socketis made of ribbed steel bars with inner thread on the top. Different lengths can be provided on request.

D&J 钢筋螺纹套筒，由顶部有内螺纹的带肋钢筋制成。可根据要求定制不同长度。

Materials: 材质

- Ribbed steel bar HRB400
  热轧带肋钢筋

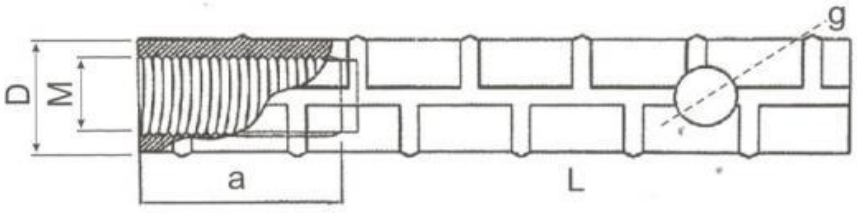

Table 15: Dimensions of the Thread Rebar Socket
表十五：钢筋螺纹套筒尺寸

Size	D	g	L
M12	Φ20	12	60/100/120/150
M14	Φ22	12	55/60/75/80/100/150
M16	Φ25	14	60/80/100/120
M18	Φ25	14	60/100/170/200/300
M20	Φ32	14	50/75/100/120/150/200/250
M24	Φ36	16	120/150/200/250/300
M30	Φ40	16	100/120/150

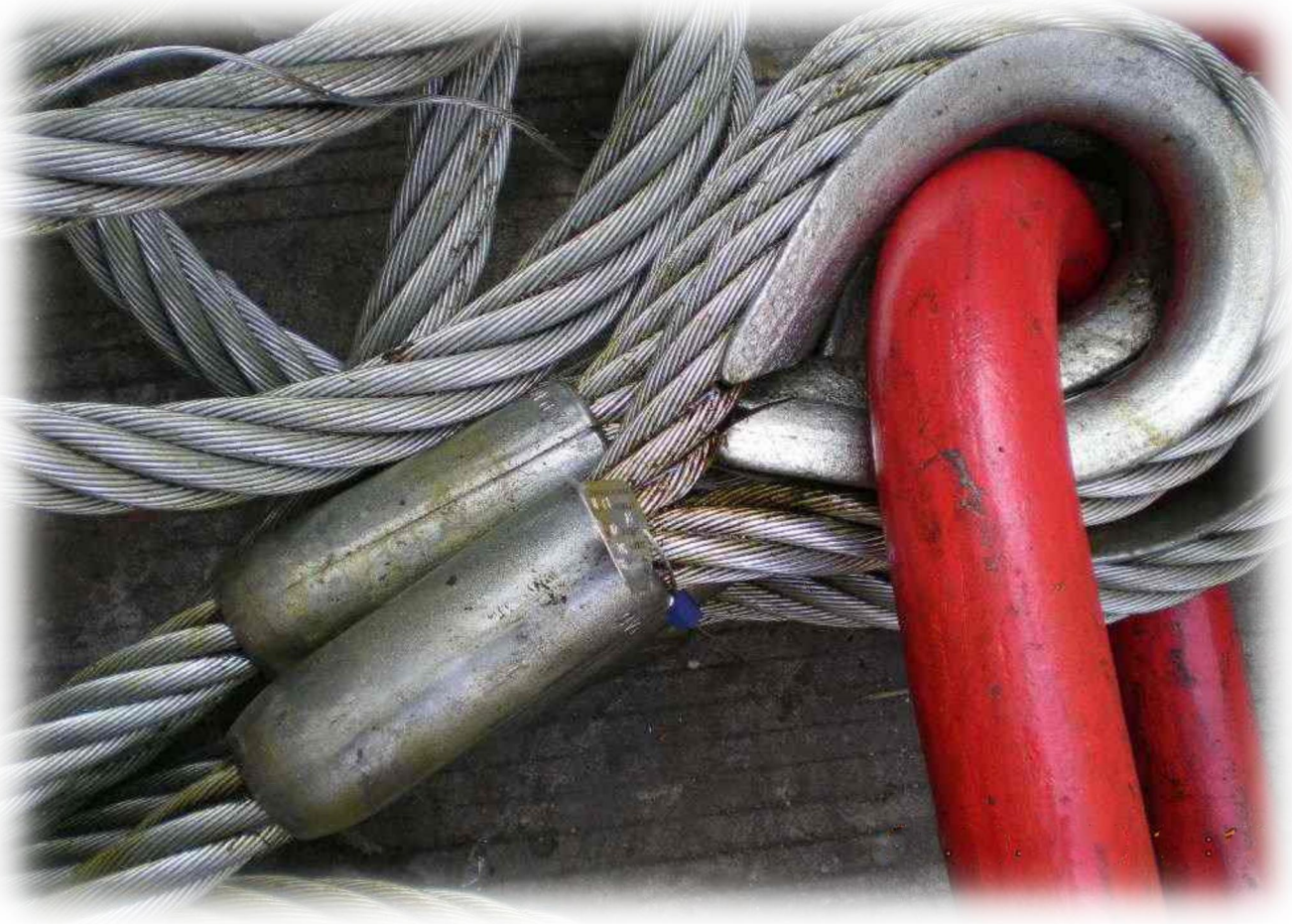

Wire Rope Sling
钢丝绳吊索

Soft Eye-Eye Sling
双头软环吊索

Wire rope slings are common used devices for lifting. They come in multiple configurations and can be used in numerous applications. Pressed with Al ferrules, they can be connected with different terminals: thimbles, closed swag socket, open spelter socket, closed spelter socket etc. They can be fitted with various lifting components including hooks, rings, shackles, plate clamps, web slings and round slings. Wire rope is manufactured in various constructions depending on their desired application and performance requirements. Wire rope comes in a variety of finishes including galvanized, bright, PVC coated, dry and lubricated wire rope.

钢丝绳吊索是常用的起重设备。它们有多种配置，可用于多种起吊场景。通过铝套圈压制，可与不同端口连接：三角圈、闭口端子、开口索节、闭口索节等。它们可以装配各种起重部件，包括吊钩、吊环、钩环、板夹、吊带和圆形吊索。钢丝绳根据其所需的应用和性能要求，结构各有不同，表面处理也不同，有镀锌、光面、涂油、PVC 涂层、干面和油面等。





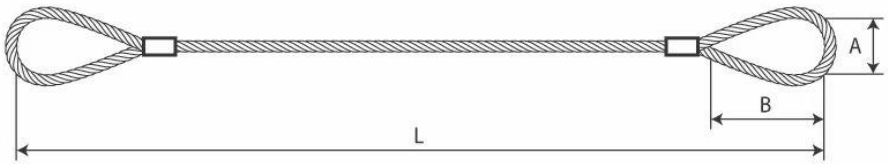

Rope structure, multiple lengths & diameters are available
钢丝绳结构和尺寸长度可根据要求定制

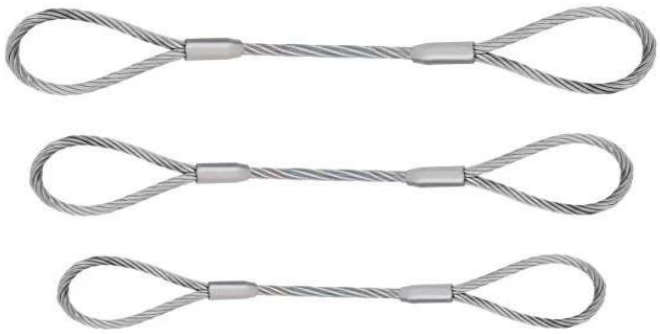

Material： 材质
- 1Wire rope 钢丝绳
- 2 Al Ferrule 铝套

Safety factor 5:1.

安全系数 5：1

Thimble Eye-Eye Sling
三角圈吊索





Material： 材质

- 1Wire rope 钢丝绳
- 2 Al Ferrule 铝套
- 3 Stain-less Thimble 不锈钢三角圈

Safety factor 5:1
安全系数 5：1

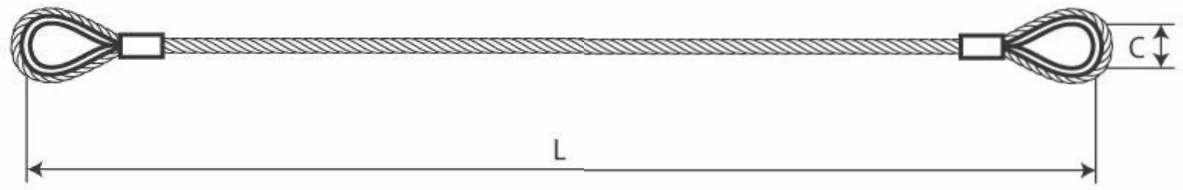

Rope structure, multiple lengths & diameters are available
钢丝绳结构和尺寸长度可根据要求定制

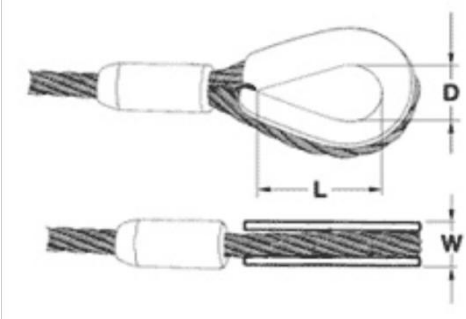



Open/Closed Spelter Socket Sling

开/闭式索节吊索

Open/Closed Spelter sockets are possibly one of the strongest fittings for a wire-rope. A socket is permanently fixed to the end of the rope and is ideal as an anchoring system for oil rig anchor ropes/cables, tow ropes or for fastening ropes/cables in construction type applications, e.g. Bridges and roofing. These specific poured sockets are widely used to create a very strong, permanent end termination. Poured sockets possess a tapering cavity in the line with the proposed course of strain. The end of the wire rope is inserted from the small end with the wires being splayed out within the cone. The cone is subsequently filled up with molten zinc.

开式/闭式索节可能是钢丝绳最坚固的配件之一。索节永久固定在绳索末端，是石油钻机锚绳/缆绳、牵引绳或施工型应用（如桥梁和屋顶）中固定缆绳/缆绳的理想锚固系统。这些特殊的浇铸索节广泛用于制造非常坚固的永久性端接。浇铸的索节锥形空腔。钢丝绳的末端从小头插入，钢丝在圆锥体内张开，随后用熔融的锌填充圆锥体。



Open Spelter Socket
开式索节



Open Spelter Socket
闭式索节

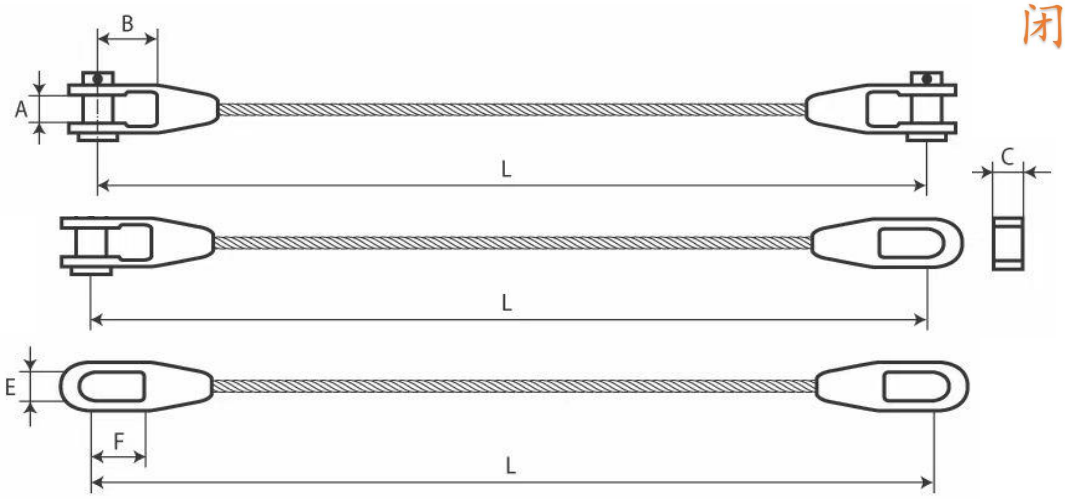

The Socket， Rope structure, multiple lengths & diameters are available
索节，钢丝绳结构和尺寸长度可根据要求定制

Safety factor 5:1
安全系数 5：1



Double and Single Endless Sling
双/单圈铝管压制吊索

Double and Single endless steel wire rope slings are economical and adaptable slings with no fixed wear points. They are suitable to lift and move tubes, pipes and long metal parts.

单/双圈钢丝绳吊索是一种经济适用的无固定磨损点吊索。它们适用于起吊和移动管子、管道和长金属部件。

Material： 材质

- 1Wire rope 钢丝绳
- 2 Al Ferrule 铝套
- 3Tear proof label 防撕标牌

Safety factor 5:1

安全系数 5：1

Rope structure, multiple lengths & diameters are available
钢丝绳结构和尺寸长度可根据要求定制





手插软索
Soft Eye Hand Spliced



手插套环
Thimble Eye Hand Spliced



铝合金压接软索
Soft Eye Machine Swaged



铝合金压套环
Thimble Eye Machine Swaged



铝合金压接锥型软索
Steel Ferrule Machine Swaged



闭口端子
Closed Swag Socket



开式索节
Cast Socket Sling /Open Type



闭式索节
Cast Socket Sling /Closed Type

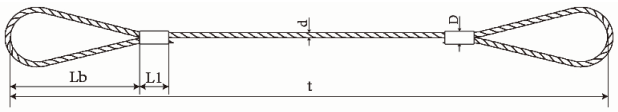

Both End With Thimble

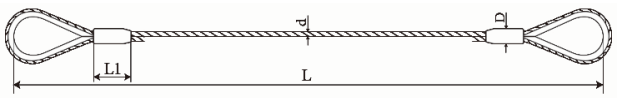

Both End With Mechanical Thimble



Address: 3077. Jinxia Road, Dongshe Town, Tongzhou District, Nantong, Jiangsu, China

Zip code: 226300

Office Contact: +86-0513-85910698

Website : www.dj-lifting.com

Director: Jack Xue **Sales:** Caroline Xu

Mobile: +86 15312603538 **Mobile:** +86 18100636587

Email: esps360@163.com **Email:** tech-xu@esps360.com