Transport specialist for bulk materials

Provide safe and efficient transport solutions for customers!

JILUHENGCHI
吉鲁恒驰

Shandong Jilu Automobile Modification Co., Ltd.

Production address: Daxindian Industrial Park, Penglai City, Shandong Province, China
Tel./Fax: 0535-3352881
E-mail: 174691809@qq.com
Website: www.shandongjilu.com

WeChat Official Account

WeChat Applet

The company reserves all rights of final interpretation

QUALITY FIRST

About Us

Established in 2002, Shandong Jilu Automobile Modification Co., Ltd. is an automobile manufacturer with the qualification of national announcement. We are specialised in road transport, vehicle development and production, sales and service. In 2014, we successfully developed a national invention patent product with independent intellectual property rights - "Intelligent conveyor belt dump truck". The product has the features such as intelligent self-unloading, be safe and reliable, fast, with long service life & wide application, which can meet the special requirements of domestic working conditions and can be used with various brands of tractor trucks. The products are exported to many countries such as Mongolia, UAE & Nigeria and more than 30 provinces and autonomous regions in China.

We have strong technical research and development capabilities. Product design and production are in accordance with the Technical Specification (CNCA-C11-01:2020). And, we also have won the honorable titles such as national high-tech enterprises & Enterprise Technology Innovation Award in Shandong Province.

No. of workers: 300

No. of R&D doctors: 8

No. of R&D workers: 30

Area: 60,000m2

5000 sets/year

Plant area: 30,000m2





Total: 30,000 sets

As the first mass-produced automatic unloading semi-trailer in China that has obtained the announcement so far, we have stood out in the fierce competition and accumulated effective data and operation experience. We can create greater value for the upgrading and transformation of the transport industry through the mutual promotion of technological innovation, product mass production and on-the-ground application.

8 h

Door-to-door maintenance

Upon receipt of a fault, the nearest service station or after-sales service personnel will arrive at the site within 8h to solve the problem

8 h

After-sales supporting

Parts are warehoused in multiple stations, warehoused in many cities, and goods are delivered to the service station within 8h

12 times/year

After-sales supporting

Marketing outlets covers throughout the country, a return visit (12 times/year) is conducted for large customers, a return visit (4 times/-year) is conducted for customers with large-scale purchase

---



Three years of research and development

Years are taken for the development of each model. Well-known domestic experts are invited to visit the plant several times for evaluation. After passing the evaluation, we still have to carry out more than 100 times of operation test for 6 months before testing mass production



Process inspection

We strictly implement the national and industry inspection standards, organize operators to study and carry out self-test, implement the inspections such as Chassis Welding Inspection and Body Assembly Size Inspection to ensure that the transferred products are qualified and the pass rate of process inspection is 98%



Ex-factory inspection

Factory inspection is conducted before leaving the factory. The full inspection is conducted in accordance with the requirements of the factory and the list to strictly control the quality. The pass rate of one-time inspection is 98%. After the rectification, the pass rate must be 100% before leaving the factory

JILU QUALI-FICATION



We have undertaken the drafting and preparation work for the standards such as industry standard and national standard of conveyor belt dump truck. The detailed provisions in the relevant standards are all derived from the practice and verification support provided by "JILU", which is deservedly the hidden champion of "conveyor belt dump truck" .





Company Honors

JILU QUALIFICATION

























Cases of vehicle delivery projects

With 7 years of market validation, a total of more than 30,000 vehicles are delivered. Since it was put into production in Penglai in 2013, we have been subject to constant improvement and accumulation, with stable quality and low maintenance rate. It is the most popular model in the market. As a leader in the crawler dumper industry, the market share has remained above 75% for five consecutive years.












备 设 运 转 料 物 口 进
18205459168


HOWO


山东吉鲁
0535-3352681

Preferred Supply Chain

High-quality domestic suppliers are integrated. The best combination of durability and economy for the dumper is achieved through global sourcing, scale procurement and selection of robust parts. In addition, we insist on investing in the independent research and development of core technology. Some parts have invention patents. We conduct co-development with the original manufacturers and achieve exclusive supply to create the core technology.



I. High-strength anti-corrosion chain

The specially processed chain is not only highly corrosion-resistant, but also made with removable single-end replaceable type, which greatly reduces the maintenance cost in the future;



II. Special anti-corrosion & electroplating lateral connecting plate

High-strength steel is formed by one-step stamping. Subjecting to special anti-corrosion process treatment, the appearance is neat and beautiful, with super anti-corrosion & wear-resistant performance.



III. Frame sprayed with German anti-corrosion paints

The large frame of dumper is sprayed with German anti-corrosion paint to prevent rusting during the use of the large frame;



IV. National standard oil-, acid-, alkali- and high temperature-resistant conveyor belt

The conveyor belt rubber is of split-piece design, with three-layer stacked structure & high overall strength, which is wearing-resistant and easy to maintain.



V. Digital HD camera

Compared with the traditional analogue camera, it has huge advantages in terms of anti-electromagnetic interference, picture clarity and resolution;



VI. Hydraulically-automatic opening of the rear door

During the entire unloading process, human intervention is not required from the opening of the rear door to the completion of unloading to ensure the safety of workers;



VII. Folding hydraulically-automatic top cover

Under hydraulic remote control, saving time and effort Safe and environmental protection, quick and easy.



VIII. Dual operating system (remote control & manual)

High sensitivity, long remote control distance, strong anti-interference ability, intelligent logic button design, easy to operate and easy to maintain.

Special tooling

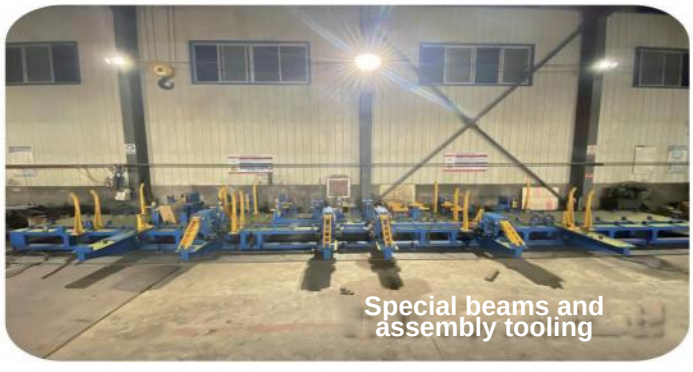

Special beams and assembly tooling

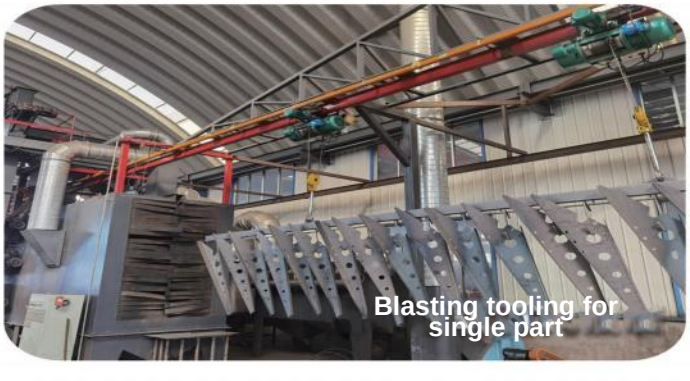

Blasting tooling for single part



Poor stability on slopes, risk of rollover

When conventional lifting trucks carry out unloading on slopes, improper operation may cause the risk of overturning; Overturned vehicles cannot be repaired and can only be scrapped, which is costly



Stable on slopes, be safe and free from rollover

Subjecting to 45° inclined platform test, be suitable for uneven working environment; Unloading via crawler can radically avoid the risk of rear-overturning

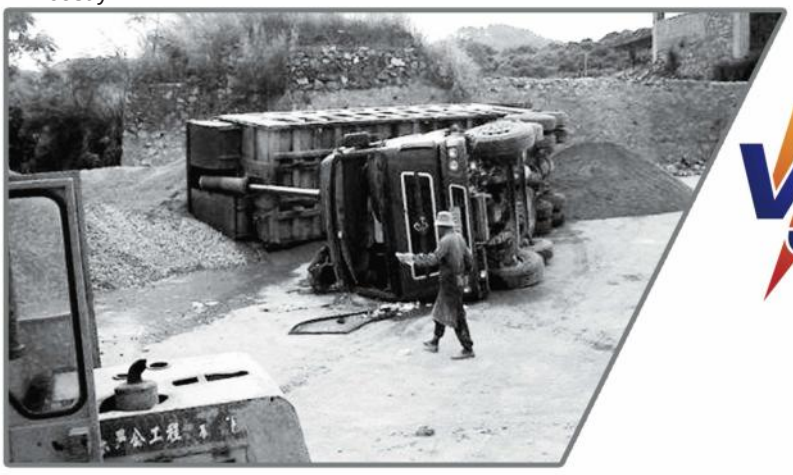

To prevent rollover & rear-overturning, a safe working distance is reserved; With high site requirements, unloading by multiple dumpers at the same time cannot be achieved



No risk of rollover, many dumpers could be operating side-by-side

No risk of rollover, a safe working distance is not required to be reserved; many dumpers could be operating side-by-side, Unloading work can be completed in 1min, with high unloading efficiency

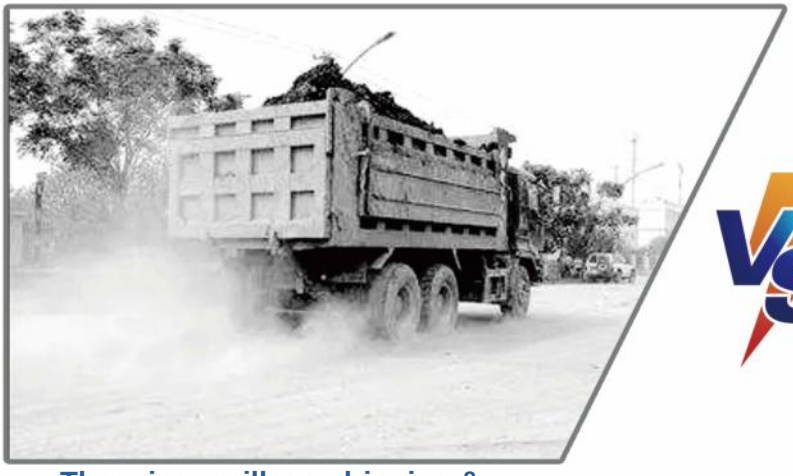

Throwing, spillage, dripping & leakage, with dust pollution

Throwing, spillage, dripping & leakage are caused by improper sealing, with sever dust pollution issues; The tarpaulin cover is poorly sealed, easily damaged, and it is laborious to be winded up.



Lightweight top cover, which is tightly sealed & opened remotely

The top cover is made of lightweight material and can be opened hydraulically by one-touch operation with a wired or wireless remote control, eliminating the need for climbing to a height and manual labour

Classification of applicable goods



890mm belt width



1300mm belt width

Applicable goods include 890mm belt width



2200mm belt



























Sludge



Domestic garbage

Semi-trailer for light bulk grain transport



Handling equipment of materials at ports



Low flat bed conveyor belt dump truck



Semi-trailer for bulk grain transport 2.0



Multi-purpose flat-push dump truck compartment (big stones can be transported)



Reciprocating pan dumping semi-trailer



Semi-trailer for bulk grain transport (special truck for asphalt clinker)



SINOTRUCK 6×4



Trash & sludge transfer vehicle with intelligent conveyor belt



Mobile belt conveyor of supporting products for intelligent conveyor belt dump truck



Semi-trailer for bulk grain transport

PG9403ZLS



The vehicle is made of high-tensile steel, and equipped with 890mm conveyor belt, medium-sized motor, V-shaped structure design, fully-automatic hydraulic folding environmental protection cover, manual + remote control dual operating system, reversing + unloading dual-channel monitoring system, high-definition infrared camera, high-definition display screen, with the unloading speed less than 3min.

Product model	890	1300
Main Parameter	External size: 10000×2550×3750	External size: 10000×2550×3750
	Internal size: 9600×2390×2000	Internal size: 9600×2390×2000
	Capacity: 36.6m^3	Capacity: 38.8m^3
	Curb weight:10000Kg	Curb weight: 10700Kg
	Plate spring: 10 pcs * 16 thick	Plate spring: 10 pcs * 16 thick
	No. of axes: 3	No. of axes: 3
	Tyres: 12R22.5/12	Tyres: 12R22.5/12
	Wheelbase/rear suspension: 4580+1310+1310/1400	Wheelbase/rear suspension: 4580+1310+1310/1400

Semi-trailer for light bulk grain transport

PG9400ZLS/PG9400ZLSA



The vehicle is made of high-tensile steel, and equipped with 890mm conveyor belt, V-shaped structure design, fully-automatic hydraulic folding environmental protection cover, manual + remote control dual operating system, reversing + unloading dual-channel monitoring system, high-definition infrared camera, high-definition display screen, with the unloading speed of 1min.

Product model	Light 890	Light 1300
Main Parameter	External size: 9000×2550×3550	External size: 9000×2550×3550
	Internal size: 8600×2390×1800	Internal size: 8600×2390×1800
	Capacity:28.8m^3	Capacity:30.3m^3
	Curb weight: 8200-8500Kg	Curb weight: 8500-9000Kg
	Load: Standard load	Load: Standard load
	No. of axes: 3	No. of axes: 3
	Tyres: 12R22.5/12	Tyres: 12R22.5/12
	Wheelbase/rear suspension: 3680+1310+1310/1550	Wheelbase/rear suspension:3680+1310+1310/1550

Semi-trailer for standard loads

PG9405ZLSA









[Technical Parameters of Main Structure]			
Product Trademark	Jilu Hengchi	SDRC Notice	349
Product Name	PG9405ZLSA	Product No.	ZS95D6ZP01Z
Total weight (kg)	40000	Overall Dimension (mm)	9500/9900 × 2550 × 3475/3675/3875/3975
Rated load (kg)	32800/32400/32100	Compartment size (mm)	7090/7290/7490/7590/7690/7890/7990 × 2380 × 2000/2200/2400/2500
Curb Mass (kg)	7200/7600/7900	Rear suspension (mm)	−/1290；−/1380
Approach angle/ departure angle (°)	−/20	No. of steel plate springs	−/3/3/3；4/4/4；8/8/8
No. of axis	3	Wheel base (mm)	5530+1310+1310；5130+1310+1310；5040+1310+1310
Number of tyres	6	Tires Specification	425/65 R22.520PR
Axle load (kg)	-/24000 (3-axis group)	Rear wheel track (mm)	2250/2250/2250
Remarks	U-shaped box, the capacity ranges from 29 to 39m3; Material of side and bottom plate: 2.5mm high-strength plate; Plate spring mechanical suspension: 13T; Factory fitted axles + ABS + automatic adjusting arms, single-acting outriggers, including hydraulic modification of the main vehicle, reversing + unloading dual-channel HD streaming media monitoring, manual + remote control dual control system, hydraulic motor-driven conveyor belt for unloading, width of conveyor belt is 1300mm, split-piece rubber;		
[Applicable Materials]	Coal, refined coal or raw coal		

Advantages of low flat bed conveyor belt dump truck

I. This model is a special coal transport vehicle developed on the basis of the new intelligent conveyor belt dump truck. In addition to the advantages of ordinary intelligent conveyor belt dump truck, it also has the significant advantages such as more compact structure, lighter weight, larger capacity and lower centre of gravity.
II. Designed with low-flatbed frame, with more compact overall structure.
III. The deadweight is lighter than that of an ordinary conveyor belt dump truck of the same cubic capacity.
IV. The unloading surface is about 1.3m, which is about 300mm lower than the unloading surface of ordinary intelligent conveyor belt dump truck, the overall centre of gravity of the load is lowered, and the transport is more stable.
V. Easy to operate, more efficient & more environmental protection, the driver observes the unloading situation through the camera in the cab, intelligent remote control operation can be conducted, and the tailgate and the top cover can be hydraulically opened. No dust, low noise, seamless docking material yard, unloading while driving, secondary or tertiary operations are not required, with higher efficiency.
VI. With stronger durability, beams and carriages are made of high-strength steel plates, the vehicle has been tested for durability, and the product quality is stable and reliable.
VII. Split-piece belt is adopted for better sealing performance, no material leakage, easier to repair, with lower maintenance cost.
VIII. Delivered from the original factory, legal compliance, no modification, the compartment size is the announced, large capacity, and heightening & modification are not required.

Semi-trailer for bulk grain transport 2.0

PG9401ZLSA



U-shaped compartment is applied. For the same specification, the capacity of the compartment increases by 10.5%, while the deadweight of the body decreases by 1.3%, reducing the centre of gravity of the cargo.
Designed with lightweight compartment. For the same specification, multiple bending of the compartment side panels increases the strength of the side panels.
The integrated design of the beam greatly improves the load-bearing performance of the beam.
The funnel structure is added at the end, which is convenient to work together with other machines.
The motor is moved backward and the centre of gravity of the load is shifted towards the rear position, increasing the stability of the vehicle when loaded.
The locking mechanism is provided to the rear door to make the rear door open and close more smoothly.

Product model	New 2.0 intelligent conveyor belt dump truck
Main Parameter	External size: Length: 8600/9100/0/9500 Width: 2550 Height: 3470/3670/3870
	Internal size: Length: 8000/8500/8900 Width: 2550 Height: 1600/1800/2000
	Capacity: 26m^3/30.3m^3
	Curb weight: 7800/8200/8500Kg
	Load: Standard load
	Belt width: 890/1300
	Tyres: 12R22.5/12
	Wheelbase/rear suspension: 3770+1310+1310/1810, 3480+1310+1310/1700,3430+1310+1310/1250

Semi-trailer for bulk grain transport (special truck for asphalt clinker)

PG9408ZLSA



The vehicle is made of high-tensile steel, and equipped with 1300mm conveyor belt, high-temperature-resistant rubber, the outer layer of the vehicle is insulated, which can transport asphalt & clinker, V-shaped structure design, fully-automatic hydraulic folding environmental protection cover, manual + remote control dual operating system, reversing + unloading dual-channel monitoring system, high-definition infrared camera, high-definition display screen, with the unloading speed less than 2min. Optional tailpipe heating is available. The temperature drop is not more than 30°C for 12h.

Product model	For asphalt
Main Parameter	External size: 9000×2550×3350/3550
	Internal size: 8600×2390×1600/1800
	Capacity: 26m³/30.3m³
	Curb weight: 9200-9600Kg
	Load: Standard load
	No. of axes: 3
	Tyres: 12R22.5/12
	Wheelbase/rear suspension: 3450+1310+1310/1730

Multi-purpose flat-push dump truck compartment









A powerful tool for pushing stones

Product model	Oil cylinder flat-push compartment
Main Parameter	External size: 8500/9000/10000×2550×1800/2000
	Internal size: 7600/8100/8600
	Side plate: Corrugated 1mm+4mm wear-resistant plate
	Cylinder: 240 multi-stage double-acting telescopic cylinder
	Rear door: Double cylinder hydraulic opening
	Capacity:（m^3）：25-37
	Exterior: Containerized
	Base plate: 4mm wear-resistant plate
	Operating system: remote control operation
	Top cover: Hydraulic folding environmental protection cover
	Other: The side/base plates are made of NM450 high-strength wear-resistant plate. The front narrow and rear wide cabin design saves more energy for unloading. It is equipped with imported hydraulic system to achieve remote control operation, fully-automatic hydraulic rear door, and hydraulic environmental protection cover.

Reciprocating pan dumping semi-trailer (can be pulled back after loading the goods)

PG9403ZLSA



Designed with tank-type compartment, with more beautiful appearance and stronger strength. Lower loading surface.
Pusher plates are used to push forward the cargo, and the rubbers on both sides of the plates can be used to scrape the clay that attached to the side plates.
In terms of power, the two forms such as hydraulic motors or hydraulic cylinders are optional for customers. Hydraulic cylinder and hydraulic motor are mounted at the front board, increasing the ease of vehicle extrication as well as unloading.
The locking mechanism is provided to the rear door to make the rear door open and close more smoothly.

Product model	Flat-push dump truck
Main Parameter	External size: Length: 9050/8550 Width: 2550 Height: 3550/3750/3950
	Internal size: Length: 8100/7600 Width: 2450/2400/2350 Height: 1750/1950/2150
	Capacity: 26m³-38m³
	Curb weight: 8700/9000/9500Kg
	Load: Standard load
	Belt width: 2200mm
	Tyres: 12R22.5/12
	Wheelbase/rear suspension: 3680+1310+1310/1300,3380+1310+1310/1500（mm)

Trash & sludge transfer vehicle with intelligent conveyor belt

PG9409ZLJ



The conveyor belt inside the compartment is designed with a wide body, with an effective width of about 2200mm, and can be operated in both forward and reverse rotation, so that it can load and unload goods. The trailer can be used in conjunction with a variety of tractors, with a good fit; No residuals, it is not necessary to clean the compartment twice, saving time and effort. Under the remote control and monitoring system, it is not necessary to get off the vehicle to monitor the unloading conditions, which is safe and convenient. Integral hydraulic environmental protection box cover, with good sealing, simple operation, high efficiency, energy saving and environmental protection.

Product model	Trash & sludge transfer vehicle with intelligent conveyor belt
Main Parameter	External size: Length: 9500/10000/10500 Width: 2550 Height: 3350/3550/3750
	Internal size: Length: 9100/9600/10100 Width: 2400 Height: 1800/2000/2200
	Capacity: 53m^3
	Curb weight: 12000/13000Kg
	Load: Standard load
	Belt width: 2200
	Tyres: 1100R20/12R22.5
	Powertrain: Dual motor

Semi-trailer for bulk grain transport

PG9407ZLS



The vehicle is made of high-tensile steel, and equipped with 890mm conveyor belt, heavy duty motor power, V-shaped structure design, fully-automatic hydraulic folding environmental protection cover, manual + remote control dual operating system, reversing + unloading dual-channel monitoring system, high-definition infrared camera, high-definition display screen, with the unloading speed less than 6min.

Product model	890	1300
Main Parameter	External size: 13000×2550×3750	External size: 13000×2550×3750
	Internal size: 12600×2390×2000	Internal size: 12600×2390×2000
	Capacity: 48m^3	Capacity: 50m^3
	Curb weight: 15500Kg	Curb weight: 16300Kg
	Plate spring: 10 pcs * 16 thick/120 suspension	Plate spring: 10 pcs * 16 thick/120 suspension
	No. of axes: 3	No. of axes: 3
	Tyres: 12R22.5/12	Tyres: 12R22.5/12
	Wheelbase/rear suspension: 6800+1310+1310	Wheelbase/rear suspension: 6800+1310+1310

Slags transport vehicle

PG5310TZLBJ



Product model	Slags transport vehicle
Main Parameter	External size: 11070×2550×3925
	Internal size: 6600×2350×1500
	Capacity: 26m^3
	Curb weight: 15500Kg
	Load: Standard load
	No. of axes: 4
	Front/rear suspension: 1460/1960,1460/1760 (mm)
	Wheelbase: 2100+4400+1350, 2100+4400+1400(mm)

Handling equipment of materials at ports



Product model	Handling equipment of materials at ports
Main Parameter	External size: Length: 12000/12500/13000 Width: 3100 Height: 4300/4000
	Internal size: Length: 11600/12400/12600 Width: 2940 Height: 2400/2100
	Axle: Class 25T
	Curb weight: 21500/23000Kg
	Load: Up to 150T
	Belt width: 1800/2000
	Tyres: 12.00R20
	Powertrain: Dual motor

Mobile belt conveyor of supporting products for intelligent conveyor belt dump truck



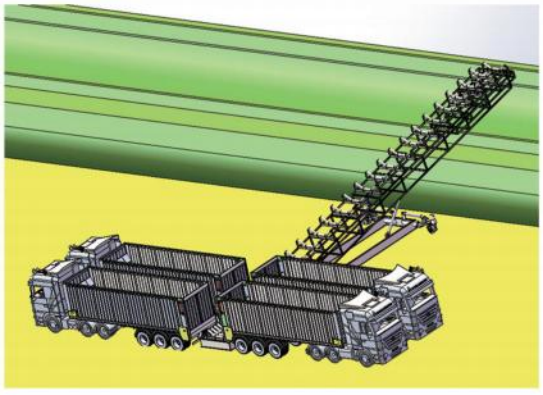

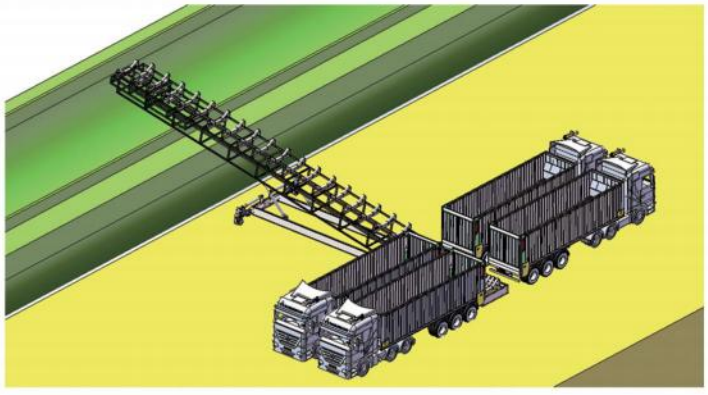

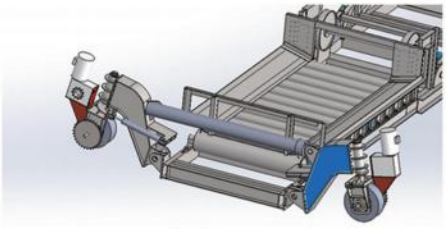

Fig. 1

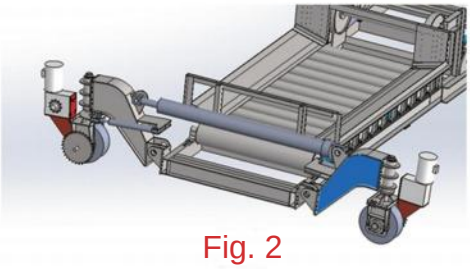

Fig. 2

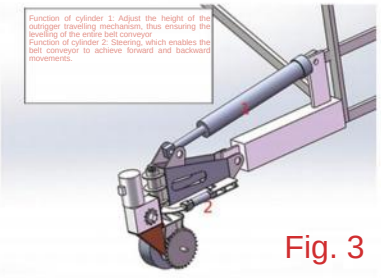

Fig. 3

This equipment is composed of a crawler vehicle and a belt conveyor. The crawler trucks unload the cargo onto a belt conveyor, through which it is transferred to the ship. Crawler truck is our patented product, which has stood the test of the market and been recognized by customers since it was introduced to the market. Unloading by crawler truck is safe and stable, and unloading speed can be controlled. It is the fact that the speed can be controlled during unloading that makes this loading process feasible. This option is not feasible if a normal rear-overturning dump truck is used. Belt conveyors is designed for current dockside ship loading operations. Compared with ordinary belt conveyor, it has the following special functions. 1. It can be moved back and forth, left and right, which is convenient and flexible. When not in use, it can automatically travel to a place that does not interfere with the operation. 2. It can be lifted and lowered, and as the ship is loaded and the ship slowly descends, the belt conveyor descends with it. 3. It can be retracted, which can solve the problem that different widths of boats can be loaded.

SINOTRUCK

PG5251ZLS



Product model	Hohan 6X4 single conveyor belt dump truck
Main Parameter	External size: Length: 10,000 Width: 2,550 Height: 3,090
	Internal size: Length: 6800 Width: 2320 Height: 1520
	Power: 390hp
	Curb weight: 13000Kg
	Load: Standard load
	Belt width: 700
	Tyres: 1100R20
	Powertrain: D

Port conveyor









Product model	Parameters of SJC1600 self-travelling intelligent loader	
Main Parameter	Conveying form: Conveyor belt	Conveying capacity: 900t/h
	Width of conveyor belt: 1600mm	Length of the conveyor variable section: 9m
	Maximum conveying height: 4m	Working range: 15°~35°; Feeding mode: Over-bridge
	Conveying speed: ≤3.15m/s	Control mode: manual + remote control
	Travelling mode: Four crawler type two-speed travelling	Travelling speed: ≤1.5km/h
	Working speed: ≤1km/h	Diesel engine power: 300hp
	Working size: Length: 32000 × Width 13000×H7000 (mm)	Transit travelling size: Length: 18000 × Width: 5000 × Height: 2500 (mm)
	Mode of transport: Dismantled and shipped in multiple sections	Deadweight: 80T